OHIO TURNPIKE AND INFRASTRUCTURE COMMISSION

THE JAMES W. SHOCKNESSY OHIO TURNPIKE

PROJECT NO. 43-22-04

BRIDGE DECK REPLACEMENT AND REHABILITATION

OHIO TURNPIKE RAMP OVER FRENCH CREEK M.P. 151.3,
OHIO TURNPIKE RAMP OVER LORAIN ROAD M.P. 152.3,
JENNINGS ROAD OVER OHIO TURNPIKE M.P. 153.9
LORAIN AND CUYAHOGA COUNTIES, OHIO

INDEX OF SHEETS

TITLE SHEET	1
GENERAL SUMMARY	2-3
TYPICAL SECTIONS	4-5
MAINTENANCE OF TRAFFIC NOTES	6-7
MAINTENANCE OF TRAFFIC PLANS	8-14
GENERAL NOTES (FRENCH CREEK)	15
OHIO TURNPIKE RAMP OVER FRENCH CREEK BRIDGE PLANS	16-26
GENERAL NOTES (LORAIN AND JENNINGS)	27
OHIO TURNPIKE RAMP OVER LORAIN ROAD BRIDGE PLANS	28-42
JENNINGS ROAD OVER OHIO TURNPIKE BRIDGE PLANS	43-55

OHIO TURNPIKE AND INFRASTRUCTURE COMMISSION STANDARD DRAWINGS

AS-1	REINFORCED CONCRETE APPROACH SLAB	12/31/2019
CB-2	CATCH BASIN, NO. CB-1 RECONSTRUCTED	10/20/2017
CL-1	CHAIN LINK SAFETY FENCE (ALL ALUMINUM) DETAILS, TYPE 1	01/15/2020
DJ-1	DECK JOINT DETAILS, CELLULAR ABUTMENTS	12/31/2019
DJ-2	DECK JOINT DETAILS	10/20/2017
DJ-3	DECK JOINT DETAILS, BRIDGES WITH SIDEWALKS	10/20/2017
DJ-5	DECK JOINT DETAILS AT PIERS	10/20/2017
F-1	RIGHT OF WAY FENCE	01/07/2021
TCR-1	TEMPORARY TRAFFIC CONTROL GENERAL NOTES	01/07/2021
TCR-2	TEMPORARY TRAFFIC CONTROL DETAILS, LEGEND, NOTES, & STANDARD SINGLE LANE CLOSURE	01/07/2021
TCR-9	TEMPORARY TRAFFIC CONTROL SHORT DURATION / SHORT TERM SHOULDER CLOSURE	01/07/2021
TCR-10	TEMPORARY TRAFFIC CONTROL DOUBLE LANE CLOSURE	01/07/2021
TCR-12	TEMPORARY TRAFFIC CONTROL SINGLE AND DOUBLE LANE SHIFT ZONES	01/07/2021
TCR-14	TEMPORARY TRAFFIC CONTROL SINGLE LANE CLOSURE WITH PORTABLE BARRIER	01/07/2021
TCR-15	TEMPORARY TRAFFIC CONTROL SIGNS FOR MAINTENANCE & CONSTRUCTION	01/07/2021

OHIO DEPARTMENT OF TRANSPORTATION STANDARD DRAWINGS

BP-3.1	ASPHALT PAVING	01/17/2020
BP-5.1	CONCRETE CURB AND COMBINED CURB AND GUTTER	01/18/2019
DM-4.1	EROSION CONTROL AT BRIDGES	07/17/2020
DM-4.3	SEDIMENT AND EROSION CONTROLS	01/15/2016
DM-4.4	CONSTRUCTION EROSION CONTROL	01/15/2016
HL-10.11	LIGHT POLE STYLES	01/15/2021
HL-10.12	LIGHT POLE DETAILS	01/20/2017
HL-10.13	POLE BASE DETAILS	04/17/2020
HL-20.11	MISCELLANEOUS LIGHT POLE FOUNDATIONS & TRENCH DETAILS	01/15/2021
HL-30.11	PULL BOX DETAILS	01/15/2021
HL-30.22	ROADWAY CONDUIT DETAILS II	01/15/2021
HL-60.11	POLE WIRING I	07/21/2017
HL-60.12	POLE WIRING II	01/15/2021
MGS-1.1	MGS GUARDRAIL DETAILS	01/19/2018
MGS-3.1	MGS BRIDGE TERMINAL ASSEMBLY, TYPE 1	01/19/2018
MGS-4.2	MGS TYPE T ANCHOR ASSEMBLY	07/19/2013
MGS-4.3	MGS GUARDRAIL TRANSITIONS	01/18/2013
MT-96.11	SIGNALIZED CLOSING 1 LANE OF A 2 LANE HIGHWAY	04/17/2020
MT-96.20	DETAILS FOR SIGNALIZED CLOSING 1 LANE OF A 2-LANE HIGHWAY	07/15/2016
MT-96-26	TYPICAL WIRING DIAGRAM FOR ONE SIGNAL HEAD AND ONE DETECTOR	01/18/2019
MT-98.28	LANE CLOSURE WITHIN EXIT RAMP	01/17/2020
MT-99.20	TRAFFIC CONTROL FOR LONG LINE PAVEMENT MARKING OPERATIONS	04/19/2019
MT-101.60	ROAD CLOSURE USING TYPE 3 BARRICADES	01/17/2020
SBR-1-13	SINGLE SLOPE CONCRETE BRIDGE RAILING	07/20/2018
TC-61.10	DELINEATOR DETAILS	01/17/2020

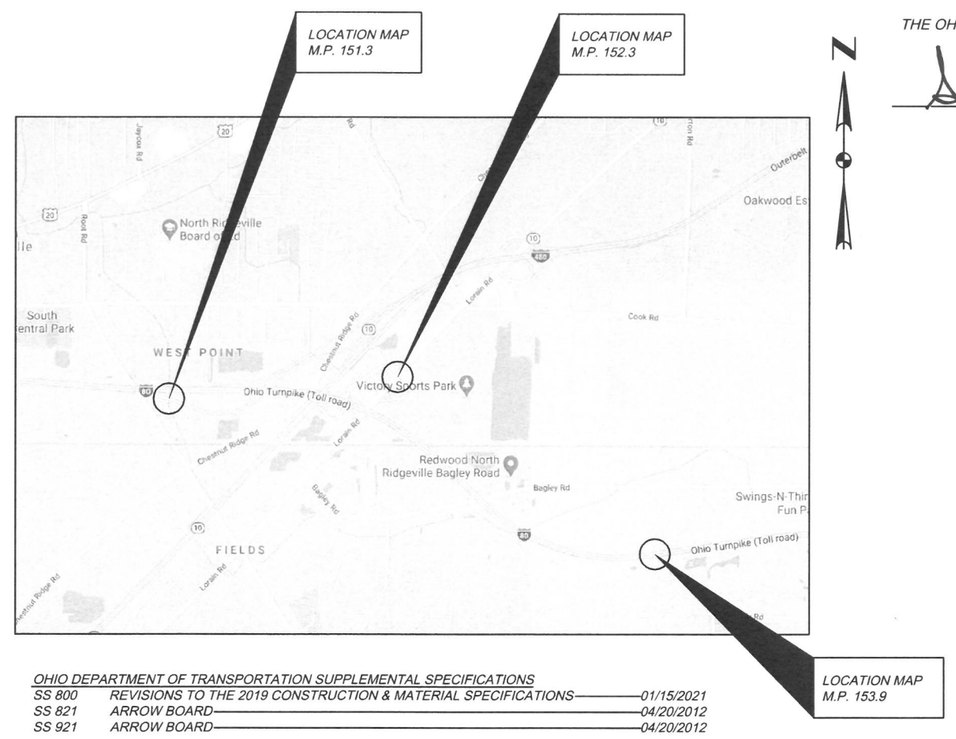

OHIO DEPARTMENT OF TRANSPORTATION SUPPLEMENTAL SPECIFICATIONS

SS 800	REVISIONS TO THE 2019 CONSTRUCTION & MATERIAL SPECIFICATIONS	01/15/2021
SS 821	ARROW BOARD	04/20/2012
SS 921	ARROW BOARD	04/20/2012

APPROVED FOR
THE OHIO TURNPIKE AND INFRASTRUCTURE COMMISSION
BY

Anthony D. Yanc

CHIEF ENGINEER

1-19-22

DATE

UNDERGROUND UTILITIES

CONTACT ALL SERVICES AT LEAST TWO WORKING DAYS BEFORE YOU DIG

CALL 1-800-362-2764 OR 811 (CELLULAR)

OR GO TO OHIO811.org Before You Dig

OHIO OIL & GAS PRODUCERS UNDERGROUND PROTECTION SERVICE CALL: 614-715-2984

OTIC DIVISION TRADES SUPERVISOR:
440-971-2731 - WEST (M.P. 0.0 - M.P. 126.4)
440-971-2781 - EAST (M.P. 126.4 - M.P. 241.26)

ENGINEERS SEAL:

STATE OF OHIO
JOSEPH L. MELLMAN
E-71911
REGISTERED
PROFESSIONAL ENGINEER

SIGNED: Joseph Mellman

DATE: MARCH 19, 2021

43-21-05_GT001.dwg: 11/30/21 - 10:48am

GENERAL SUMMARY

ITEM	TOTAL	UNIT	DESCRIPTION	M.P. 151.3	M.P. 152.3	MP 153.9
625	6	EACH	CONNECTION, UNFUSED PERMANENENT	6	-	-
625	786	FOOT	NO. 4 AWG 600 VOLT DISTRIBUTION CABLE	786	-	-
625	2	EACH	PULL BOX, 725.08, 18"	2	-	-
626	22 1	EACH	BARRIER REFLECTOR	6	16 1	-
642	1.21	MILE	EDGE LINE, 4", TYPE 1	0.58	0.50	0.13
642	0.29	MILE	LANE LINE, TYPE 1	0.29	-	-
642	0.07 1	MILE	CENTER LINE, 4", TYPE 1	-	- 1	0.07
642	1.36	MILE	PAVEMENT MARKING MISC. FINAL PAVEMENT MARKING PREPARATION	0.86	0.50	-
659	18	SQ. YD.	REPAIR SEEDING AND MULCHING	18	-	-
659	0.1	TON	COMMERICAL FERTILIZER	0.1	-	-
659	2	M. GAL	WATER	2	-	-
659	370	SQ. YD.	SEEDING AND MULCHING	370	-	-
659	42	CU. YD.	TOPSOIL	42	-	-
659	0.1	ACRE	LIME	0.1	-	-
659	2	EACH	SOIL ANALYSIS TEST	2	-	-
832	5,500	EACH	EROSION CONTROL	2,500	2,000	1,000
			STRUCTURES			
202	414	SQ. YD.	APPROACH SLAB REMOVED	231	102	81
202	LUMP	LUMP SUM	STRUCTURE REMOVED	LUMP	-	-
202	231	SQ. YD.	WEARING COURSE REMOVED	231	-	- 1
SP 202	LUMP	LUMP SUM	PORTIONS OF STRUCTURE REMOVED	-	LUMP	LUMP
503	LUMP	LUMP	COFFERDAMS AND EXCAVATION BRACING	LUMP	-	-
503	LUMP	LUMP	UNCLASSIFIED EXCAVATION	LUMP	-	-
503	24	CU. YD.	ROCK EXCAVATION	24	-	-
509	200	POUND	REINFORCING STEEL, REPLACEMENT OF EXISTING REINFORCING STEEL	-	100	100
SP 509	173,334	POUND	EPOXY COATED REINFORCING STEEL, GRADE 60	17,517	64,336	91,481
510	74	EACH	DOWEL HOLES WITH NON-SHRINK, NON-METALLIC GROUT	-	20	54
511	27	CU. YD.	CLASS QC1 CONCRETE, RETAINING/ WINGWALL NOT INCLUDING FOOTING	27	-	-
511	111	CU. YD	CLASS QC1 CONCRETE, FOOTING	111	-	-
511	11	CU. YD.	CLASS QC1 CONCRETE, HEADWALL	11	-	-
SP 511B	432	CU. YD.	CLASS HP4 CONCRETE, SUPERSTRUCTURE DECK SLAB	-	161	271
SP 511B	108	CU. YD.	CLASS S CONCRETE, BARRIERS AND PARAPETS, USING TYPE 1 CEMENT	-	52	56
SP 511B	74	CU. YD.	CLASS HP4 CONCRETE, ABUTMENT SLABS	-	25	49
SP 511B	8	CU. YD.	CLASS HP4 CONCRETE, FOR PREPLACEMENT TESTING	-	4	4
512	445	SQ. YD.	TYPE 2 WATERPROOFING	445	-	-
513	5,950	EACH	WELDED STUD SHEAR CONNECTORS	-	3,382	2,568
516	83	SQ. FT.	1" PREFORMED EXPANSION JOINT FILLER	69	-	14
SP 516A	50	FOOT	CRACK REPAIR	-	25	25
SP 516B	2,099	FOOT	SEALING OF CONSTRUCTION JOINTS	223	1,008	868
SP 516G	40	EACH	REPLACE EXPANSION BEARING DEVICE	-	20	20
SP 516J	25	EACH	REPLACE FIXED BEARING DEVICE	-	10	15
SP 519	585	SQ. FT.	PATCHING OF CONCRETE STRUCTURES	-	560	25
526	81	SQ. YD.	REINFORCED CONCRETE APPROACH SLABS	-	-	81
526	117	SQ. YD.	REINFORCED CONCRETE APPROACH SLABS, AS PER PLAN	-	117	-
SP 527	LUMP	LUMP SUM	FALSEWORK, TEMPORARY BRACING AND PROTECTIVE STRUCTURES	-	LUMP	LUMP
SP 533	135	FOOT	3" CONTINUOUS STRIP SEAL IN STRUCTURAL STEEL JOINT	-	66	69
SP 533A	135	FOOT	1 ½" COMPRESSION SEAL IN STRUCTURAL STEEL JOINT	-	66	69
SP 536	1,919	SQ.YD.	CONCRETE WEATHERPROOFING, DECK, ABUTMENT SLABS AND APPROACH SLABS	-	807	1,112
SP 536	809	SQ.YD.	CONCRETE WEATHERPROOFING, SUBSTRUCTURE	81	353	375
SP 607	409	FOOT	TYPE I FENCE, ALL ALUMINUM (9'-0" CHAIN LINK WITH SPECIALS)	-	-	409
611	150	FOOT	14'-0" SPAN X 8'-0" RISE CONDUIT, TYPE A, 706.05	150	-	-
613	472	CU. YD.	LOW STRENGTH MORTAR BACKFILL	472	-	-

DESIGN AGENCY
LJB Inc. • 22710 Fairview Center Drive, Suit 200
Fairview Park, OH 44126
(937) 306-5800 tel • (937) 306-5100 fax • LJBInc.com

NO.	REVISIONS	BY	DATE
1	ADDENDUM 3	JLM	2/22
-	-	-	-
-	-	-	-

DESIGNED	CHECKED
JLM	NRP
DRAWN	IN CHARGE
JLM	DWS

GENERAL SUMMARY
M.P. 151.3, 152.3, 153.9
LORAIN AND CUYAHOGA COUNTY

PROJECT 43-22-04
DATE: 3/19/2021

3
55

OHIO TURNPIKE AND INFRASTRUCTURE COMMISSION

43-21-05_GG002.dwg; 2/04/22 - 11:30am

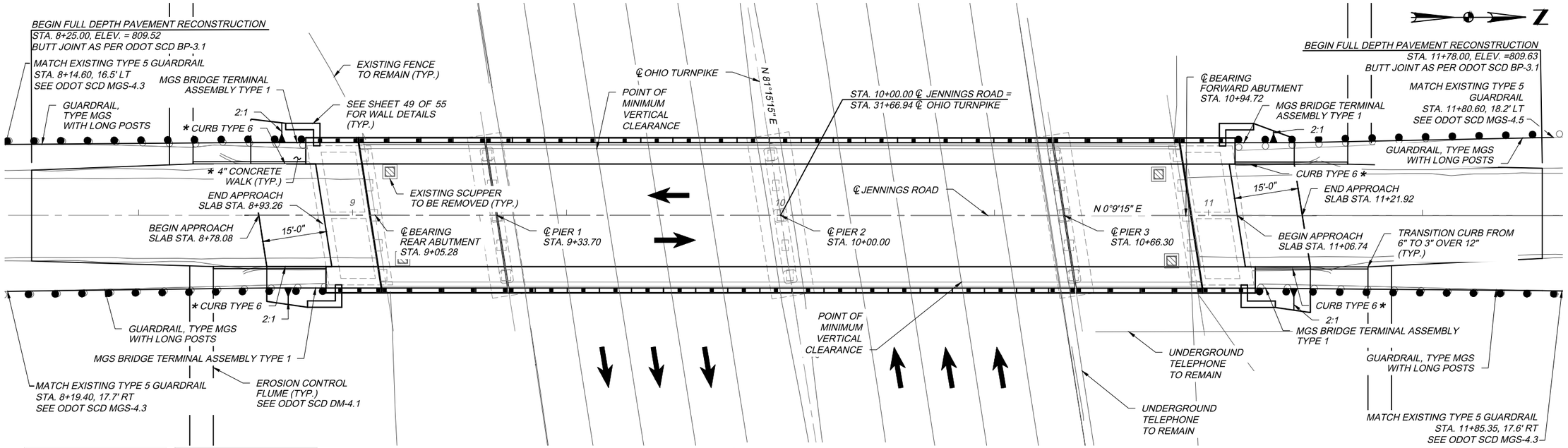

GENERAL PLAN

BENCH MARK No. 1	BENCH MARK No. 2
CONCRETE MONUMENT	CONCRETE MONUMENT
STA. 12+69.21, 21.43' LT	STA. 6+98.65, 22.14' LT
ELEVATION 805.08	ELEVATION 804.16

LOCATION OF FIRST GUARDRAIL POST	
STA. 8+88.28 LT	STA. 11+06.38 LT
STA. 8+93.62 RT	STA. 11+11.72 RT

POINT OF MINIMUM VERTICAL CLEARANCE			
LANES	EXISTING	PROPOSED	REQUIRED
EASTBOUND LANES	15'-1 1/2"	15'-6 3/4"	15'-6"
WESTBOUND LANES	15'-2 1/4"	15'-7 1/4"	15'-6"

EXISTING STRUCTURE

TYPE: CONTINUOUS AND SIMPLE SPAN STEEL BEAMS WITH NON-COMPOSITE REINFORCED CONCRETE DECK, SUBSTRUCTURE, CELLULAR ABUTMENTS, AND CAP AND COLUMN PIERS

SPANS: 28'-5"±, 66'-3 5/8"±, 66'-3 5/8"±, 28'-5"±

ROADWAY: 24'-0" TOE-TO-TOE OF PARAPETS WITH 1'-0" PARAPETS AND 4'-0" SIDEWALKS AT EACH FASCIA

ALIGNMENT: TANGENT

SKEW: 08°56'00.00"± RIGHT FORWARD

WEARING SURFACE: MONOLITHIC CONCRETE

LOADING: CF 30

BUILT: 1954, REHAB 1986

STRUCTURE FILE NUMBER: 1829041

APPROACH SLABS: 15'-0" LONG

PROPOSED STRUCTURE

PROPOSED WORK: REINFORCED CONCRETE DECK REPLACEMENT WITH 5'-0" SIDEWALKS AND 1'-0" WIDE PARAPETS WITH FENCE

TYPE: CONTINUOUS AND SIMPLE SPAN STEEL BEAMS WITH COMPOSITE REINFORCED CONCRETE DECK, SUBSTRUCTURE, CELLULAR ABUTMENTS, AND CAP AND COLUMN PIERS

SPANS: 28'-5"±, 66'-3 5/8"±, 66'-3 5/8"±, 28'-5"±

ROADWAY: 24'-0" TOE-TO-TOE OF PARAPETS WITH 1'-0" PARAPETS AND 5'-0" SIDEWALKS AT EACH FASCIA

ALIGNMENT: TANGENT

SKEW: 08°56'00.00" RIGHT FORWARD

WEARING SURFACE: 1" MONOLITHIC CONCRETE

LOADING: HS20-44 CASE II AND ALTERNATE MILITARY

COORDINATES: LATITUDE: 41°22'03.73" N
LONGITUDE: 81°57'34.40" W

APPROACH SLABS: 15'-0" LONG

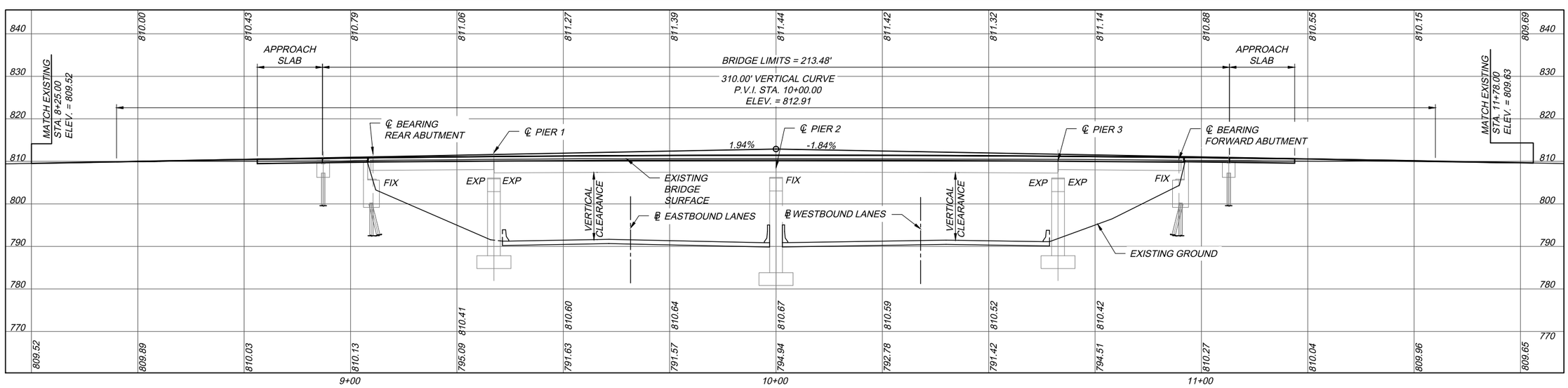

PROFILE ALONG ℄ JENNINGS ROAD

MP 1539_Jennings_SP001.dwg: 3/17/21 - 2:46pm

DESIGN AGENCY: LJB Inc. • 22710 Fairview Center Drive, Suite 200, Fairview Park, OH 44126 (937) 299-5600 fax • (937) 299-5700 fax • LJBInc.com

NO.	REVISIONS	BY	DATE
-	-	-	-
-	-	-	-
-	-	-	-
-	-	-	-

DESIGNED JLM | CHECKED NRP | DRAWN JLM | IN CHARGE DWS

GENERAL PLAN AND PROFILE
JENNINGS ROAD OVER OHIO TURNPIKE
CUYAHOGA COUNTY
M.P. 153.9

PROJECT 43-22-04
DATE: 3/19/2021

1 / 13

43 / 55

OHIO TURNPIKE AND INFRASTRUCTURE COMMISSION

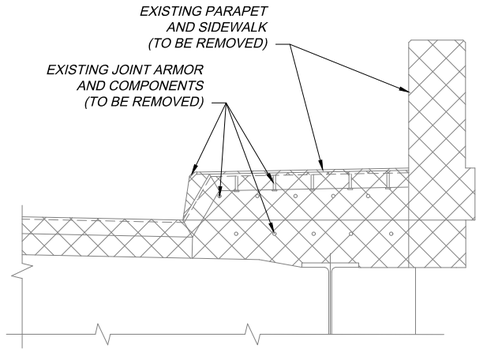

SIDEWALK SECTION

(STRIP SEAL AT PIERS 1 AND 3)

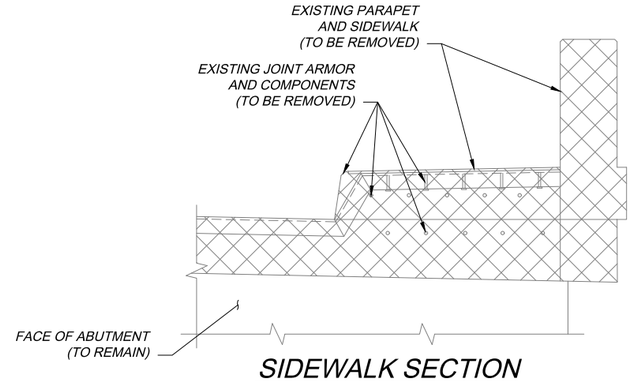

SIDEWALK SECTION

(COMPRESSION SEAL AT ABUTMENTS)

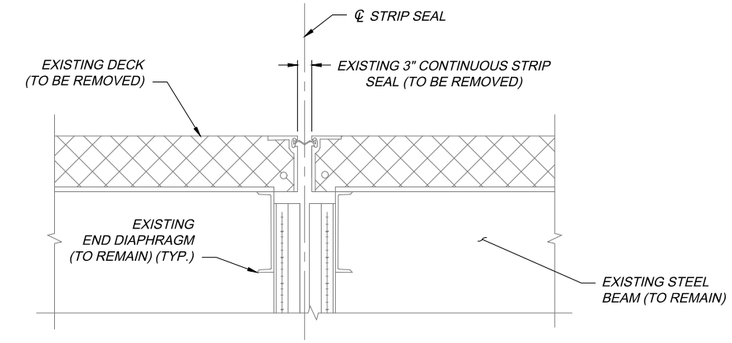

PIER 1 AND PIER 3 SECTION

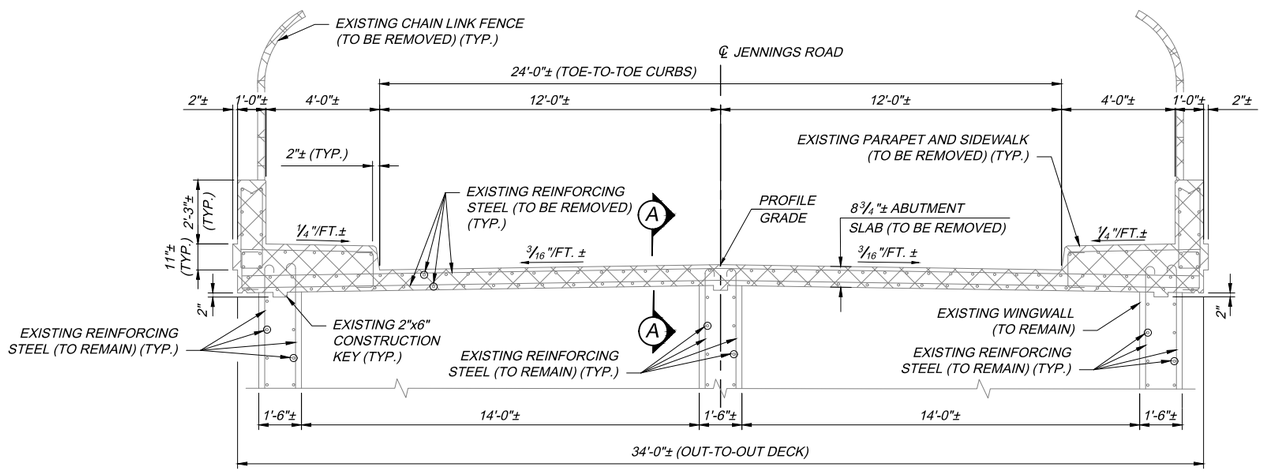

EXISTING ABUTMENT SLAB SECTION

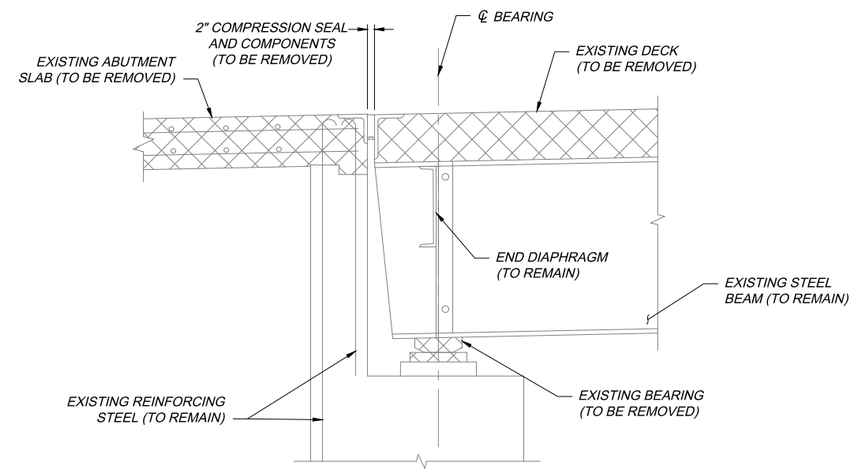

ABUTMENT SECTION

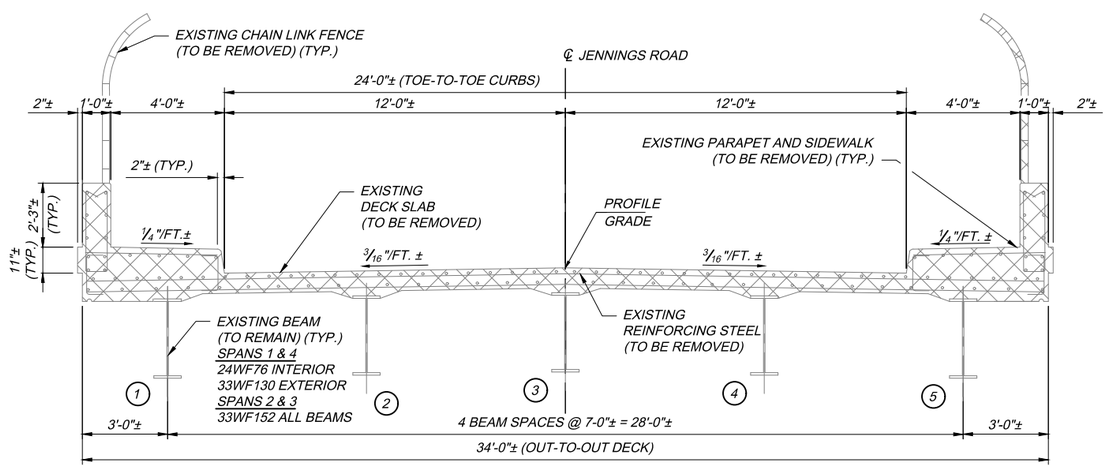

EXISTING TRANSVERSE SECTION

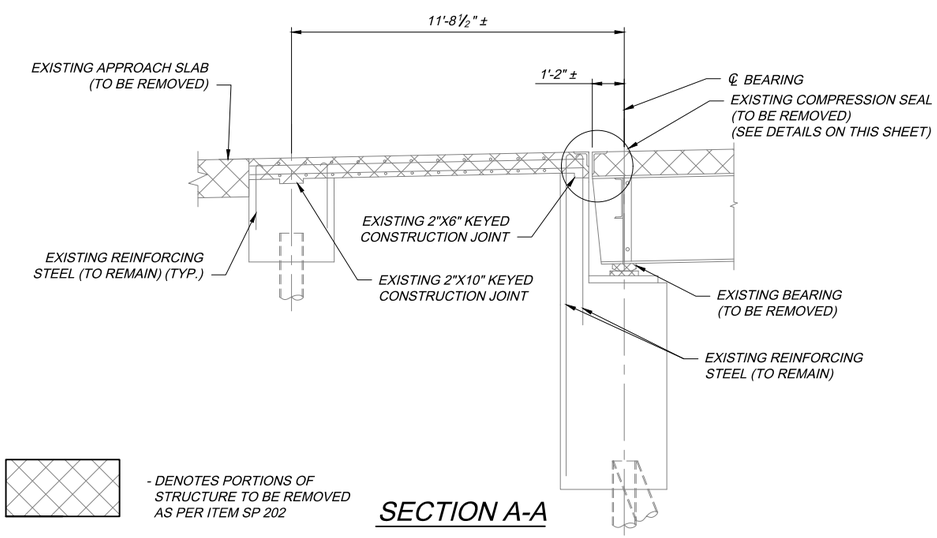

SECTION A-A

- DENOTES PORTIONS OF STRUCTURE TO BE REMOVED AS PER ITEM SP 202

DESIGN AGENCY

LJB Inc. • 22710 Fairview Center Drive, Suit 200
Fairview Park, OH 44126
(937) 299-5600 tel • (937) 299-5700 fax • LJBInc.com

NO.	REVISIONS	BY	DATE
-	-	-	-
-	-	-	-
-	-	-	-

DESIGNED	CHECKED
JLM	NRP
DRAWN	IN CHARGE
JLM	DWS

REMOVAL DETAILS
JENNINGS ROAD OVER OHIO TURNPIKE
CUYAHOGA COUNTY
M.P. 153.9

PROJECT 43-22-04
DATE: 3/19/2021

2 / 13

44 / 55

OHIO TURNPIKE AND INFRASTRUCTURE COMMISSION

MP 1539_Jennings_SV001.dwg; 3/17/21 - 2:46pm

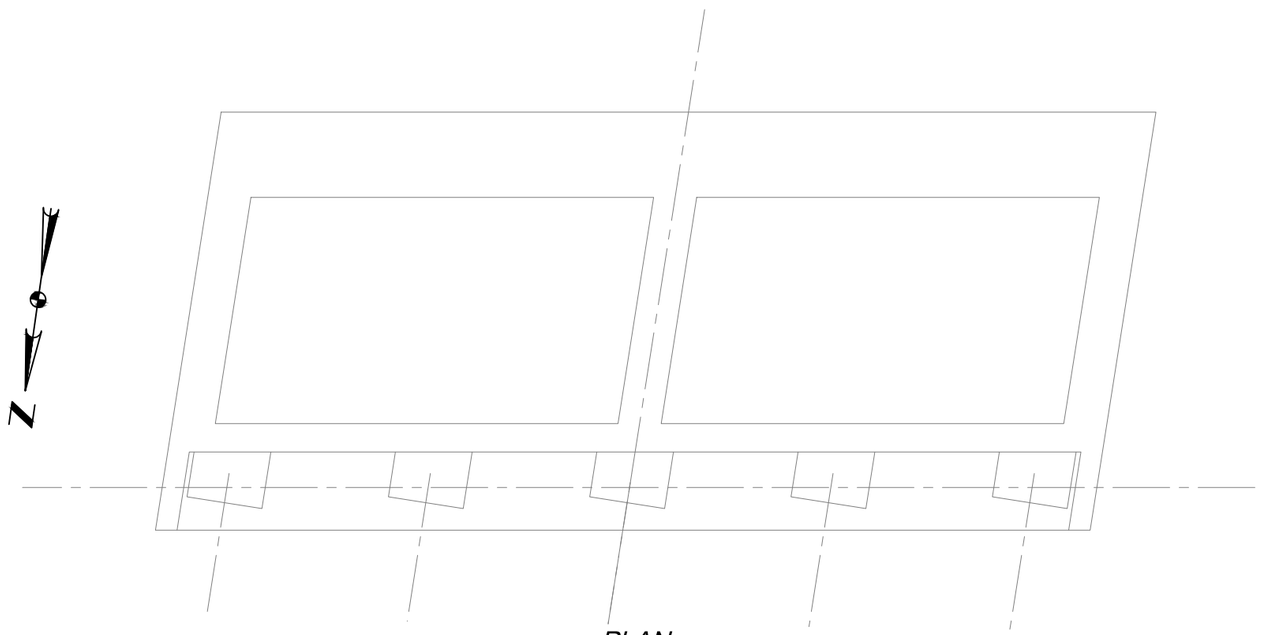

PLAN

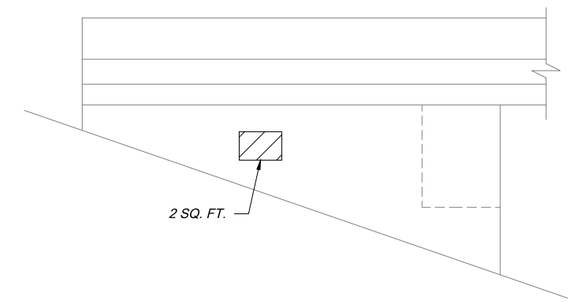

ELEVATION
RIGHT REAR WINGWALL

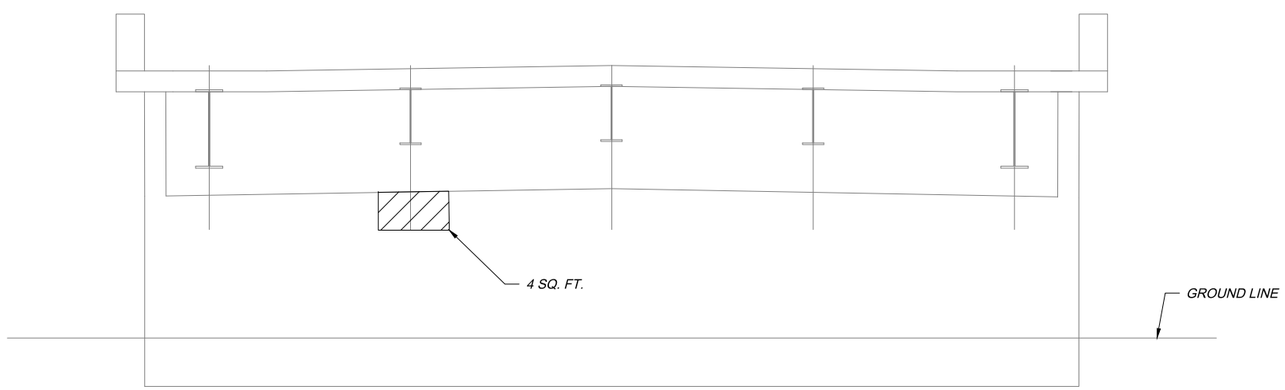

ELEVATION
REAR ABUTMENT

SP 519 REPAIR AREAS		
MEASURED QUANTITY (SQ. FT.)	CONTINGENT QUANTITY (SQ. FT.)	TOTAL (SQ. FT.)
REAR ABUTMENT AND WINGWALLS		
6	3	9

NOTES :

1. THE AREAS OF REPAIR SHOWN ARE APPROXIMATE AND ARE BASED ON A FIELD INSPECTION. FINAL DETERMINATION OF THE AREAS TO BE REPAIRED WILL BE MADE BY THE ENGINEER AT THE TIME OF CONSTRUCTION.
2. THE TOTAL CONCRETE PATCHING AREAS INDICATED ON THE DETAILS HAVE BEEN INCREASED TO ACCOUNT FOR ANY FURTHER DETERIORATION THAT MAY HAVE OCCURRED SINCE THE FIELD INSPECTION.
3. NO PATCHING REQUIRED ON FORWARD ABUTMENT AND FORWARD WINGWALLS.

LEGEND :

- DENOTES AREA TO BE REPAIRED AS PER ITEM SP 519

DESIGN AGENCY
LJB Inc. • 2710 Fairview Center Drive, Suite 200
Fairview Park, OH 44126
(937) 294-0000 tel • (937) 294-0100 fax • LJBInc.com

NO.	REVISIONS	BY	DATE
-	-	-	-
-	-	-	-
-	-	-	-

DESIGNED	CHECKED
JLM	NRP
DRAWN	IN CHARGE
NRP	DWS

ABUTMENT REPAIR DETAILS
JENNINGS ROAD OVER OHIO TURNPIKE
CUYAHOGA COUNTY
M.P. 153.9

PROJECT 43-22-04
DATE: 3/19/2021

OHIO TURNPIKE AND INFRASTRUCTURE COMMISSION

MP 1539_Jennings_SM001.dwg: 3/17/21 - 2:46pm

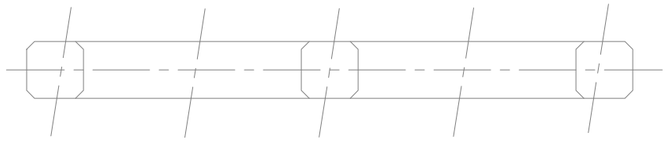

UNDERSIDE OF CAP
PIER 1

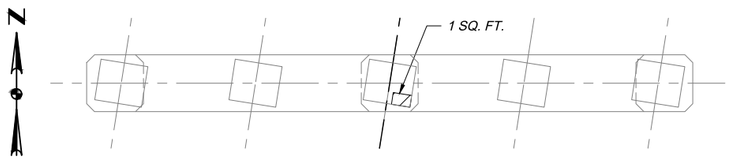

PLAN
PIER 1

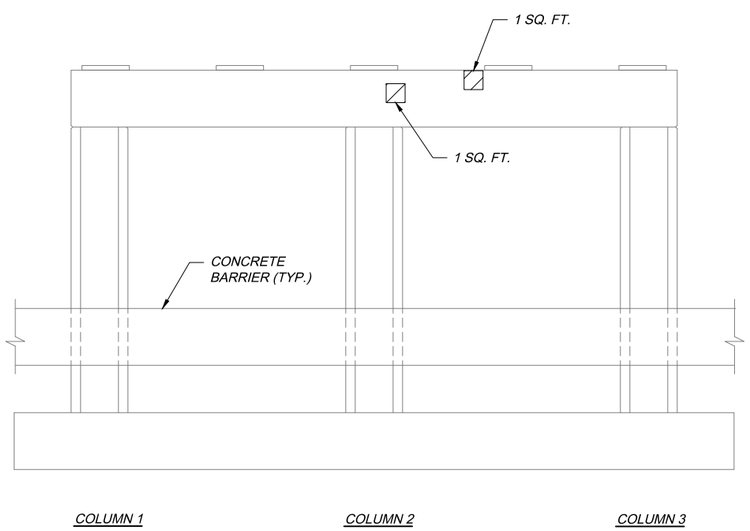

PIER 1 ELEVATION - LOOKING FORWARD

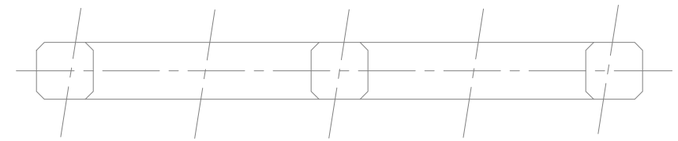

UNDERSIDE OF CAP
PIER 2

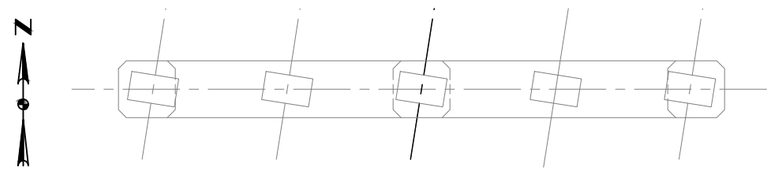

PLAN
PIER 2

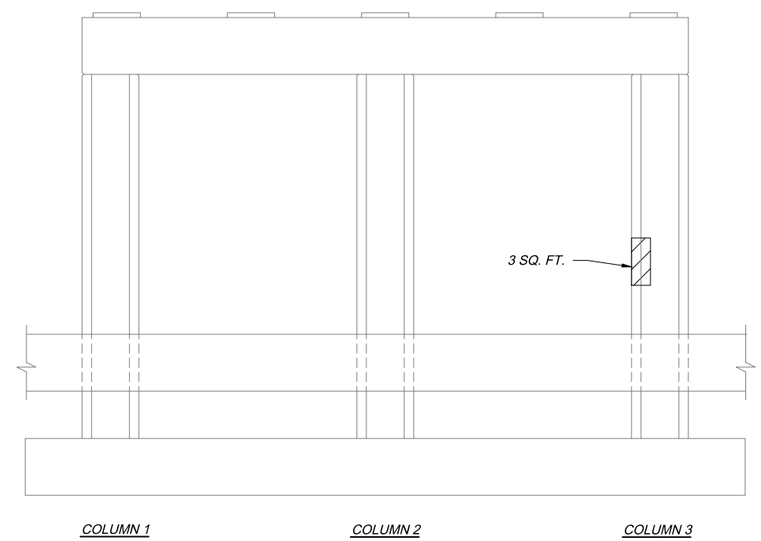

PIER 2 ELEVATION - LOOKING FORWARD

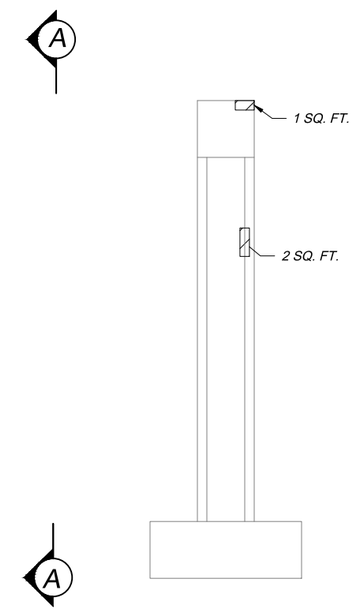

VIEW A-A

SP 519 REPAIR AREAS		
MEASURED QUANTITY (SQ. FT.)	CONTINGENT QUANTITY (SQ. FT.)	TOTAL (SQ. FT.)
PIER 1		
3	2	5
PIER 2		
6	3	9
	TOTAL =	14

NOTES :

1. THE AREAS OF REPAIR SHOWN ARE APPROXIMATE AND ARE BASED ON A FIELD INSPECTION. FINAL DETERMINATION OF THE AREAS TO BE REPAIRED WILL BE MADE BY THE ENGINEER AT THE TIME OF CONSTRUCTION.
2. THE TOTAL CONCRETE PATCHING AREAS INDICATED ON THE DETAILS HAVE BEEN INCREASED TO ACCOUNT FOR ANY FURTHER DETERIORATION THAT MAY HAVE OCCURRED SINCE THE FIELD INSPECTION.

LEGEND :

- DENOTES AREA TO BE REPAIRED AS PER ITEM SP 519

DESIGN AGENCY
LJB Inc. • 22710 Fairview Center Drive, Suite 200
Fairview Park, OH 44126
(937) 294-0000 tel • (937) 294-0100 fax • LJBInc.com

NO.	REVISIONS	BY	DATE
-	-	-	-
-	-	-	-
-	-	-	-

DESIGNED JLM | CHECKED NRP
DRAWN NRP | IN CHARGE DWS

PIER REPAIR DETAILS
JENNINGS ROAD OVER OHIO TURNPIKE
CUYAHOGA COUNTY
M.P. 153.9

PROJECT 43-22-04
DATE: 3/19/2021

4 / 13

46
55

OHIO TURNPIKE AND INFRASTRUCTURE COMMISSION

MP 1539_Jennings_SM002.dwg: 3/17/21 - 2:46pm

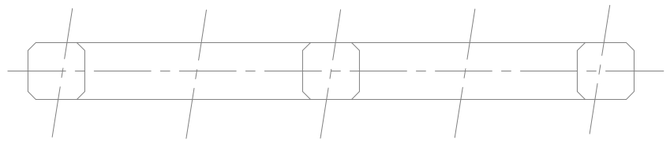

UNDERSIDE OF CAP
PIER 3

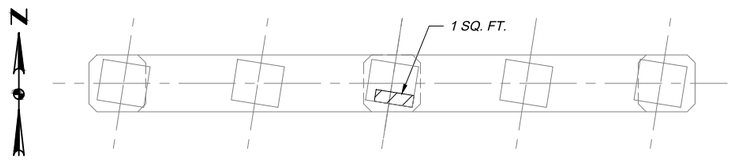

PLAN
PIER 3

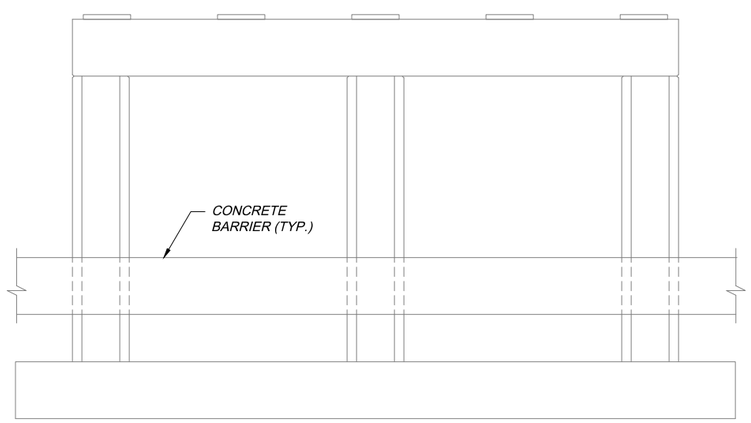

COLUMN 1 COLUMN 2 COLUMN 3

PIER 3 ELEVATION - LOOKING FORWARD

SP 519 REPAIR AREAS		
MEASURED QUANTITY (SQ. FT.)	CONTINGENT QUANTITY (SQ. FT.)	TOTAL (SQ. FT.)
PIER 3		
1	1	2
	TOTAL =	2

NOTES :

1. THE AREAS OF REPAIR SHOWN ARE APPROXIMATE AND ARE BASED ON A FIELD INSPECTION. FINAL DETERMINATION OF THE AREAS TO BE REPAIRED WILL BE MADE BY THE ENGINEER AT THE TIME OF CONSTRUCTION.
2. THE TOTAL CONCRETE PATCHING AREAS INDICATED ON THE DETAILS HAVE BEEN INCREASED TO ACCOUNT FOR ANY FURTHER DETERIORATION THAT MAY HAVE OCCURRED SINCE THE FIELD INSPECTION.

LEGEND :

- DENOTES AREA TO BE REPAIRED AS PER ITEM SP 519

DESIGN AGENCY
LJB Inc. • 2710 Fairview Center Drive, Suite 200
Fairview Park, OH 44126
(937) 294-0000 tel • (937) 294-0100 fax • LJBInc.com

NO.	REVISIONS	BY	DATE
-	-	-	-
-	-	-	-
-	-	-	-

DESIGNED JLM | CHECKED NRP
DRAWN NRP | IN CHARGE DWS

PIER REPAIR DETAILS
JENNINGS ROAD OVER OHIO TURNPIKE
CUYAHOGA COUNTY
M.P. 153.9

PROJECT 43-22-04
DATE: 3/19/2021

OHIO TURNPIKE AND INFRASTRUCTURE COMMISSION

MP 1539_Jennings_SM003.dwg: 3/17/21 - 2:46pm

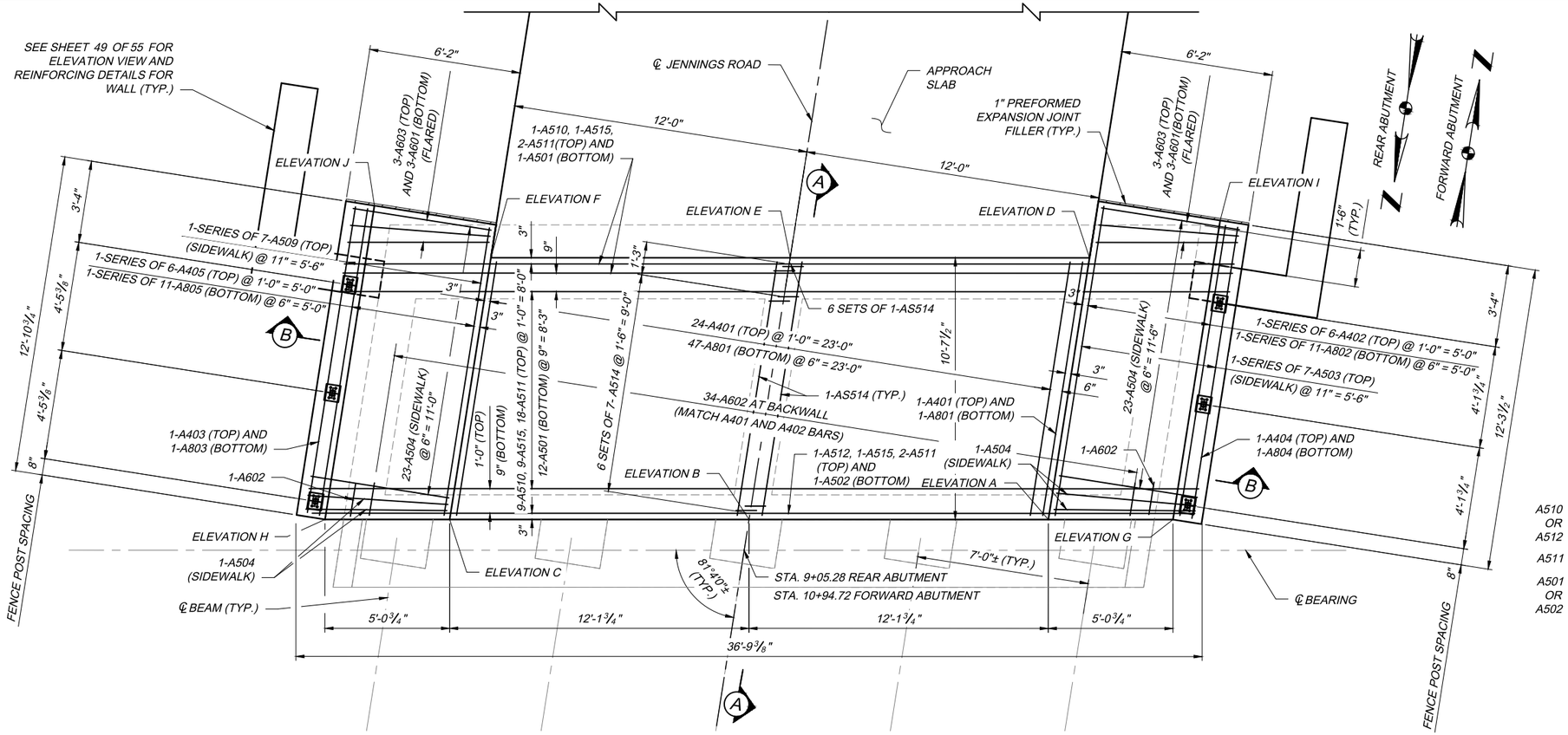

PLAN
REAR ABUTMENT SLAB
(FORWARD ABUTMENT OPPOSITE HAND)

MINIMUM LAP SPLICES
NO. 5 BAR = 2'-5"

FINAL ELEVATIONS		
POINT	REAR ABUTMENT	FORWARD ABUTMENT
A	810.62	810.76
B	810.84	810.93
C	810.67	810.72
D	810.48	810.64
E	810.70	810.80
F	810.54	810.59
G	811.39	811.54
H	811.45	811.48
I	811.22	811.39
J	811.29	811.33

NOTE:
ELEVATIONS G - J ARE AT THE TOP OF WALK.

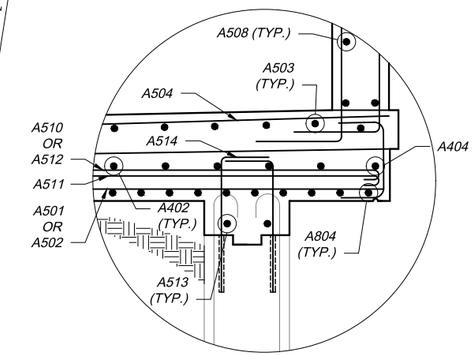

DETAIL A

NOTES :
1. FOR CHAIN LINK FENCE DETAILS, SEE OTIC STANDARD DRAWING CL-1.
2. FOR APPROACH SLAB DETAILS, SEE OTIC STANDARD DRAWING AS-1.
3. FOR RAILING ELEVATION, SEE SHEET 49 OF 55.
4. LONGITUDINAL AND TRANSVERSE CONSTRUCTION JOINTS SHALL BE TREATED IN ACCORDANCE WITH ITEM SP 516B - SEALING OF CONSTRUCTION JOINTS.

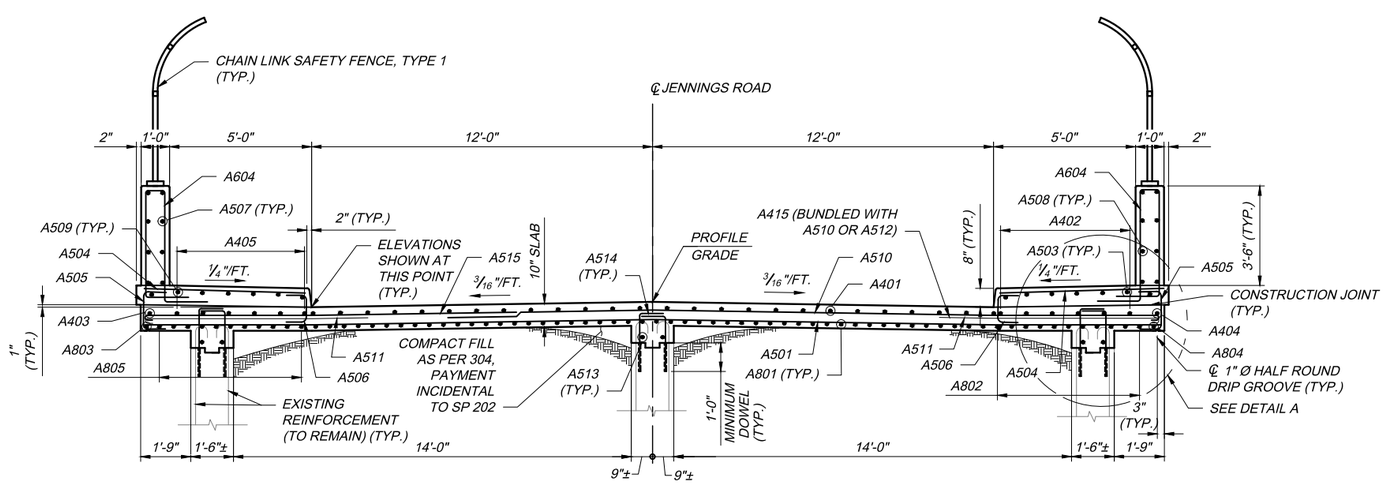

SECTION B-B

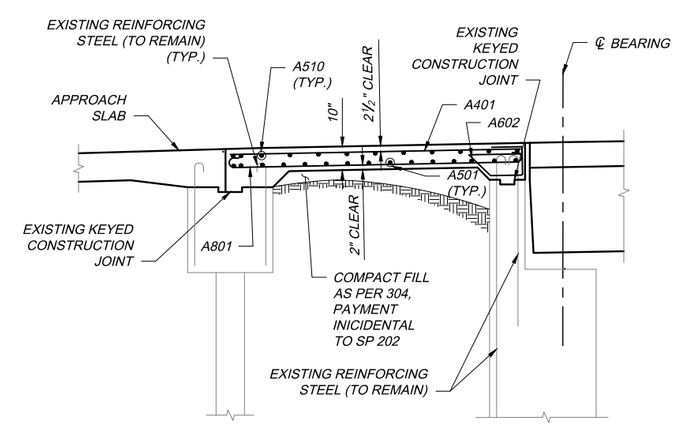

SECTION A-A

DESIGN AGENCY
LJB Inc. • 22710 Fairview Center Drive, Suite 200
Fairview Park, OH 44126
(937) 299-5600 • (800) 362-9076 • LJBInc.com

NO.	REVISIONS	BY	DATE
-	-	-	-
-	-	-	-
-	-	-	-
-	-	-	-

DESIGNED JLM | CHECKED NRP
DRAWN JLM | IN CHARGE DWS

ABUTMENT SLAB PLANS
JENNINGS ROAD OVER OHIO TURNPIKE
CUYAHOGA COUNTY
M.P. 153.9

PROJECT 43-22-04
DATE: 3/19/2021

6 / 13

48 / 55

OHIO TURNPIKE AND INFRASTRUCTURE COMMISSION

MP 1539_Jennings_SR001.dwg: 3/17/21 - 2:46pm

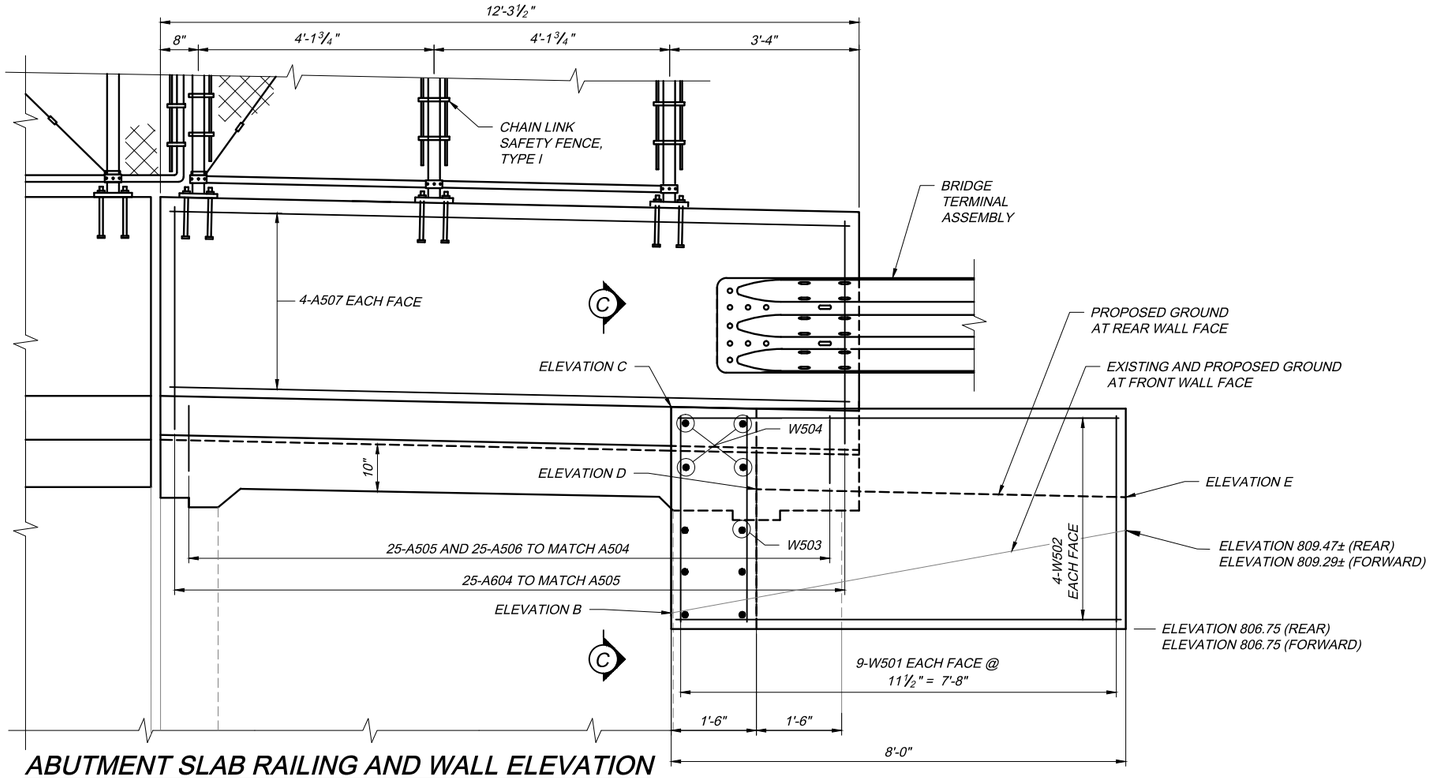

ABUTMENT SLAB RAILING AND WALL ELEVATION

(REAR LEFT AND FORWARD RIGHT)

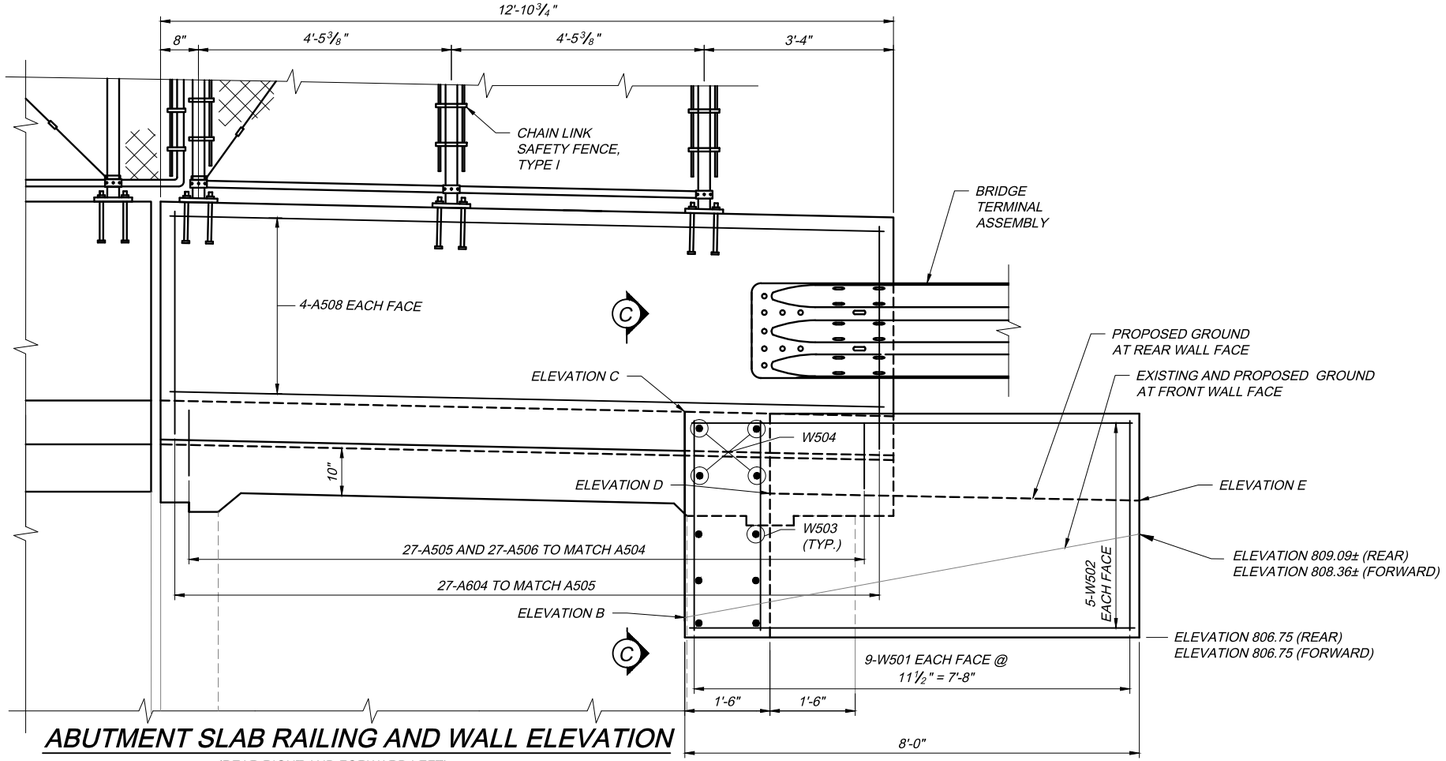

ABUTMENT SLAB RAILING AND WALL ELEVATION

(REAR RIGHT AND FORWARD LEFT)

NOTES:

1. FOR RAILING AND WALL PLAN VIEWS, SEE SHEET 48 OF 55.
2. FOR RAILING SECTION VIEW, SEE SHEET 48 OF 55.
3. FOR CHAIN LINK FENCE DETAILS, SEE OTIC STANDARD DRAWING CL-1.
4. PLACE FENCE POSTS VERTICAL WITH BASE PLATES PLACED PARALLEL TO TOP OF PARAPET.
5. CONSTRUCT WALL IN ACCORDANCE WITH SP 511B CLASS HP4 CONCRETE, ABUTMENT SLABS.
6. PROVIDE WEATHER PROOFING ON ALL EXPOSED SURFACES OF WALL PER SP 536 CONCRETE WEATHERPROOFING, DECK, ABUTMENT SLABS AND APPROACH SLABS.

	ELEVATION A	ELEVATION B	ELEVATION C	ELEVATION D	ELEVATION E
REAR LEFT	813.12±	808.13±	811.27	809.85	809.41
REAR RIGHT	813.15±	808.08±	811.34	809.92	809.48
FORWARD LEFT	813.04±	809.01±	811.44	810.02	809.59
FORWARD RIGHT	811.59±	807.99±	811.38	809.96	809.52

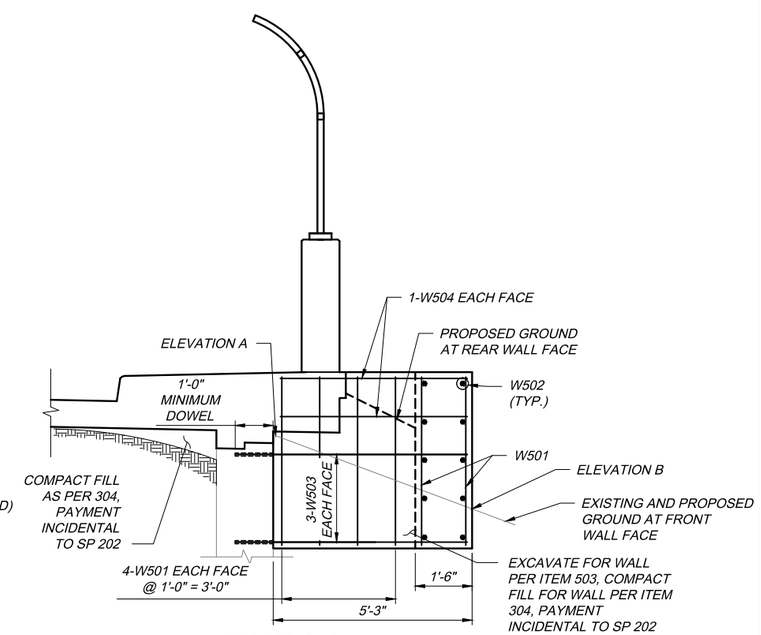

VIEW C-C

MP 1539_Jennings_SR003.dwg; 3/17/21 - 2:46pm

DESIGN AGENCY: LJB Inc. • 2270 Fairview Center Drive, Suite 200, Fairview Park, OH 44126 (937) 299-5600 tel • (937) 299-5700 fax • LJBInc.com

NO.	REVISIONS	BY	DATE
-	-	-	-
-	-	-	-
-	-	-	-

DESIGNED JLM | CHECKED NRP | DRAWN JLM | IN CHARGE DWS

ABUTMENT SLAB DETAILS
JENNINGS ROAD OVER OHIO TURNPIKE
CUYAHOGA COUNTY
M.P. 153.9

PROJECT 43-22-04
DATE: 3/19/2021

7 / 13

49 / 55

OHIO TURNPIKE AND INFRASTRUCTURE COMMISSION

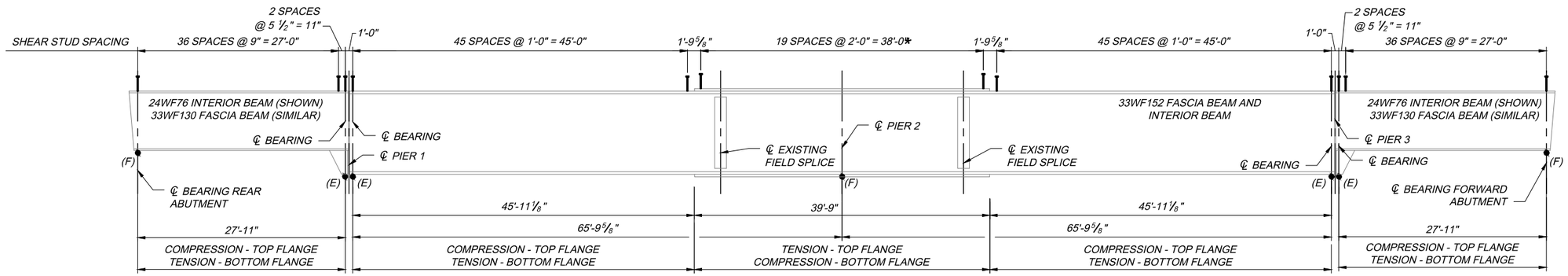

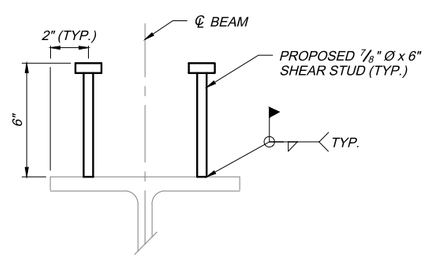

ELEVATION
SHEAR STUD DETAIL
EXISTING 24WF76

(REFER TO SHEAR STUD DIAGRAM FOR SPACING)

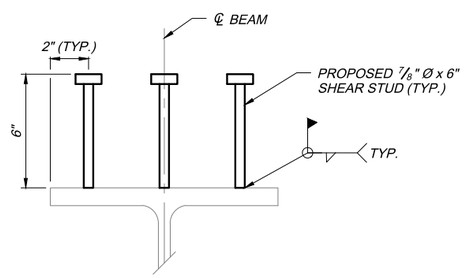

ELEVATION
SHEAR STUD DETAIL
EXISTING 33WF130 AND 33WF152

(REFER TO SHEAR STUD DIAGRAM FOR SPACING)

NOTES :

1. WELDED SHEAR STUD CONNECTORS SHALL CONFORM TO AASHTO M169.

2. FOR DECK JOINT DETAILS, SEE OTIC STANDARD DRAWINGS DJ-1, DJ-2, DJ-3, AND DJ-5.

3. WELD ATTACHMENT OF SUPPORTS FOR CONCRETE DECK FINISHING MACHINE TO AREAS OF THE FASCIA STRINGER FLANGES DESIGNATED "COMPRESSION". DO NOT WELD ATTACHMENTS TO AREAS DESIGNATED "TENSION". FILLET WELDS TO COMPRESSION FLANGES SHALL BE AT LEAST 1" FROM EDGE OF FLANGE, BE NO MORE THAN 2" LONG, AND BE AT LEAST ¼ " FOR THICKNESSES UP TO ¾ " OR 5/16 " FOR GREATER THAN ¾" THICK.

LEGEND :

(F) - EXISTING FIXED BEARING (TO BE REPLACED)

(E) - EXISTING EXPANSION BEARING (TO BE REPLACED)

* ADJUST SPACING OF SHEAR STUDS AS NECESSARY TO AVOID RIVETS ON EXISTING BEAMS.

DESIGN AGENCY
LJB Inc. • 22710 Fairview Center Drive, Suite 200
Fairview Park, OH 44126
(937) 299-5600 tel • (937) 299-5700 fax • LJBInc.com

NO.	REVISIONS	BY	DATE
-	-	-	-
-	-	-	-
-	-	-	-

DESIGNED JLM | CHECKED NRP
DRAWN JLM | IN CHARGE DWS

SUPERSTRUCTURE DETAILS
JENNINGS ROAD OVER OHIO TURNPIKE
CUYAHOGA COUNTY
M.P. 153.9

PROJECT 43-22-04
DATE: 3/19/2021

8 / 13

50 / 55

OHIO TURNPIKE AND INFRASTRUCTURE COMMISSION

MP 1539_Jennings_SM004.dwg: 3/17/21 - 2:46pm

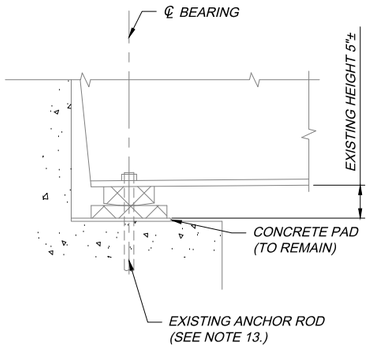

REMOVAL DETAIL - ABUTMENT

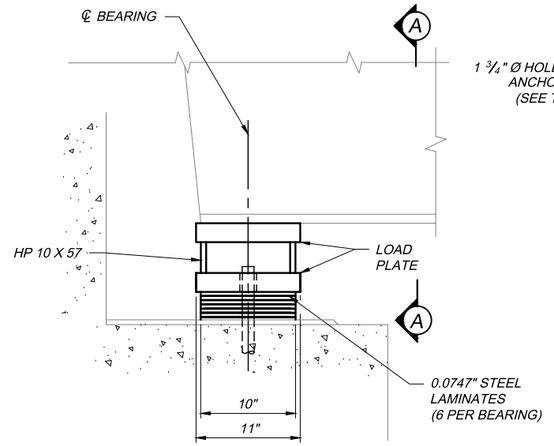

ELEVATION

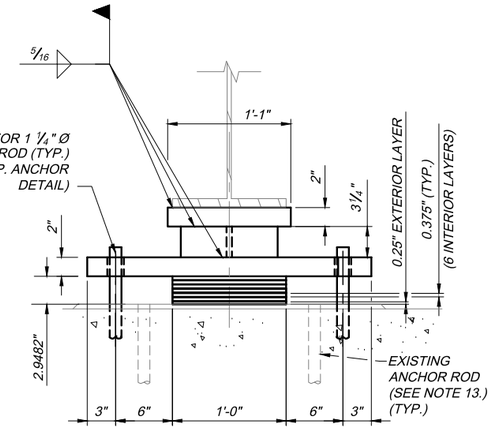

SECTION A-A

BEARING DETAIL A - ABUTMENT (FIXED)

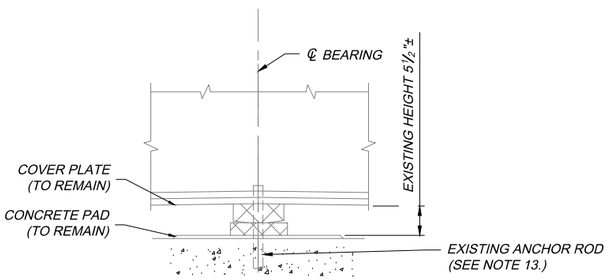

REMOVAL DETAIL - PIER 2

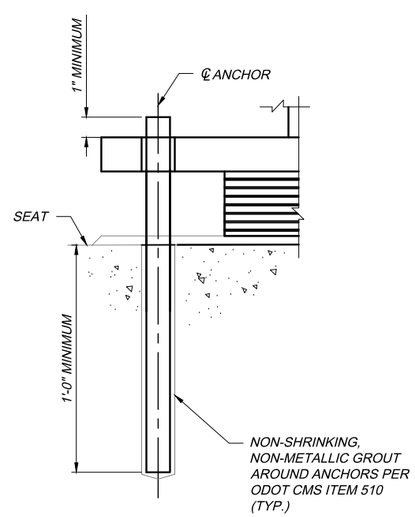

TYPICAL ANCHOR DETAIL

COST OF ANCHOR, NON-SHRINKING AND NON-METALLIC GROUT SHALL BE INCLUDED WITH ODOT CMS ITEM 510

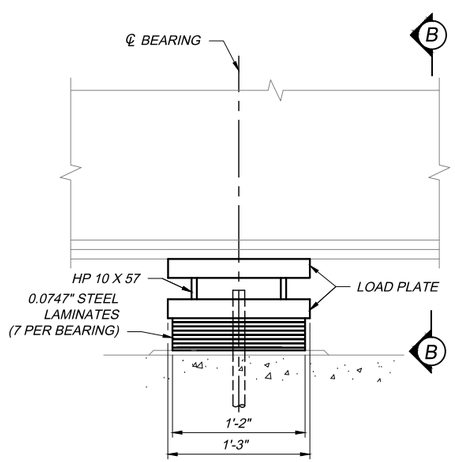

ELEVATION

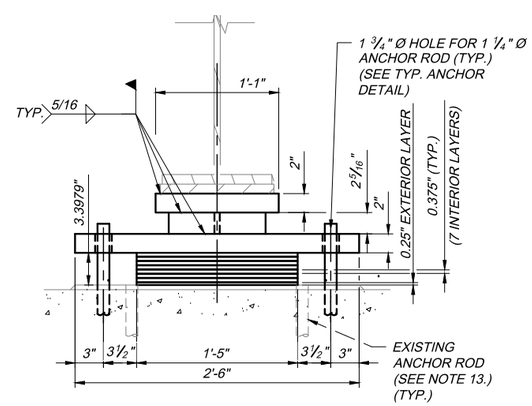

SECTION B-B

BEARING DETAIL B - PIER 2 (FIXED)

- DENOTES PORTIONS OF BEARINGS TO BE REMOVED

NOTES:

1. ELASTOMERIC BEARINGS:THE BEARINGS HAVE BEEN DESIGNED UNDER DIVISION I, SECTION 14.6.6, METHOD A, OF THE AASHTO STANDARD SPECIFICATIONS FOR HIGHWAY BRIDGES. ELASTOMERIC BEARINGS SHALL COMPLY WITH ODOT CMS ITEM 516 AND SECTION 18, BEARINGS, DIVISION II, CONSTRUCTION OF THE AASHTO STANDARD SPECIFICATIONS FOR HIGHWAY BRIDGES. BEARINGS SHALL BE GRADE 3, 50 DUROMETER ELASTOMER AND SHALL BE SUBJECTED TO THE LOAD TESTING REQUIREMENTS CORRESPONDING TO DESIGN METHOD A. THE TESTING SHALL BE INCLUDED IN THE PRICE BID FOR THE BEARINGS. THE MANUFACTURER SHALL FURNISH CERTIFIED TEST DATA. THE MANUFACTURER SHALL SUPPLY A SAMPLE BEARING OF EACH DESIGN, AS SHOWN IN THE PLANS, FOR DESTRUCTIVE TESTING AND APPROVAL PURPOSES. SAMPLE BEARINGS SHALL NOT BE PAID FOR DIRECTLY BUT SHALL BE CONSIDERED INCIDENTAL TO THE ITEM.
2. WELDING SHALL BE CONTROLLED SO THAT THE PLATE TEMPERATURE AT THE ELASTOMER BONDED SURFACE DOES NOT EXCEED 300°F AS DETERMINED BY USE OF PYROMETRIC STICKS OR OTHER TEMPERATURE MONITORING DEVICES.
3. BEARING REPOSITIONING: IF THE BEARINGS ARE SET AT AN AMBIENT TEMPERATURE HIGHER THAN 80°F OR LOWER THAN 40°F AND THE BEARING SHEAR DEFLECTION EXCEEDS ⅛ OF THE BEARING HEIGHT AT 60°F ± 10°F, THE GIRDERS SHALL BE RAISED TO ALLOW THE BEARINGS TO RETURN TO THEIR UNDEFORMED SHAPE AT 60°F ± 10°F.
4. THE STEEL LOAD PLATE SHALL BE ASTM A709 GRADE 50 STEEL AND SHALL BE PAINTED IN ACCORDANCE WITH SP514A. PAINTING SHALL NOT BE PAID FOR DIRECTLY, BUT SHALL BE CONSIDERED INCIDENTAL TO THE ITEM.
5. THE STEEL LOAD PLATE SHALL BE BONDED BY VULCANIZATION TO THE ELASTOMER DURING THE MOLDING PROCESS.
6. SUPERSTRUCTURE SUPPORT, AND/OR JACKING AND RESETTING OF BEARINGS AS DIRECTED BY THE ENGINEER SHALL BE PERFORMED IN ACCORDANCE WITH ITEM 516 AND SP 516G. SEE STRUCTURE NOTES AND SPECIAL PROVISIONS.
7. BASIS OF PAYMENT: THE UNIT BID PRICE SHALL INCLUDE ALL MATERIALS, LABOR AND INCIDENTALS NECESSARY TO FURNISH AND INSTALL LAMINATED ELASTOMERIC BEARINGS. SAMPLE BEARINGS SHALL NOT BE MEASURED FOR PAYMENT.
8. ANCHOR RODS SHALL BE PLACED AS PER ODOT CMS 510.
9. ALL BEARINGS SHALL BE MARKED PRIOR TO SHIPPING. THE MARKS SHALL INDICATE THE BEARING LOCATION ON THE BRIDGE AND A DIRECTION ARROW THAT POINTS UP STATION. ALL MARKS SHALL BE PERMANENT AND BE VISIBLE AFTER THE BEARING IS INSTALLED.
10. IF THE BRIDGE SEAT AREA IS HIGH OR UNEVEN, PROPER ELEVATION AND A LEVEL SURFACE SHALL BE SECURED BY GRINDING THE AREA. GRINDING SHALL BE INCLUDED WITH ITEM SP 516G OR SP 516J FOR PAYMENT.
11. THE ELASTOMERIC BEARING PADS SHALL CONFORM TO ODOT CMS 711.21.
12. FOR BEARING LOADING SEE SHEET 52 OF 55.
13. CUT EXISTING ANCHOR RODS FLUSH WITH EXISTING BEAM SEATS. PAYMENT FOR THIS WORK SHALL BE INCIDENTAL TO ITEM 202 PORTIONS OF STRUCTURE REMOVED.

DESIGN AGENCY
LJB Inc. • 2270 Fairview Center Drive, Suite 200
Fairview Park, OH 44126
(937) 299-5600 ■ (401) 232-0700 ■ LJBInc.com

NO.	REVISIONS	BY	DATE
-	-	-	-
-	-	-	-
-	-	-	-
-	-	-	-

DESIGNED	CHECKED
JLM	NRP
DRAWN	IN CHARGE
JLM	DWS

BEARING DETAILS
OHIO TURNPIKE RAMP OVER JENNINGS ROAD
CUYAHOGA COUNTY
M.P. 153.9

PROJECT 43-22-04
DATE: 3/19/2021

9 / 13

51 / 55

OHIO TURNPIKE AND INFRASTRUCTURE COMMISSION

MP 1539_Jennings_SB001.dwg: 3/17/21 - 2:46pm

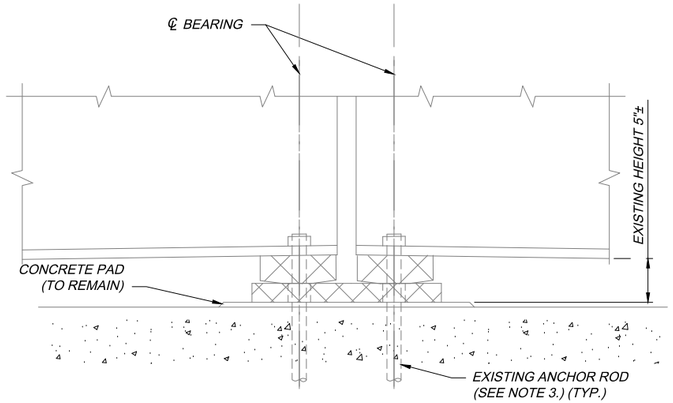

REMOVAL DETAIL FOR PIERS 1 AND 3, FASCIA BEAM

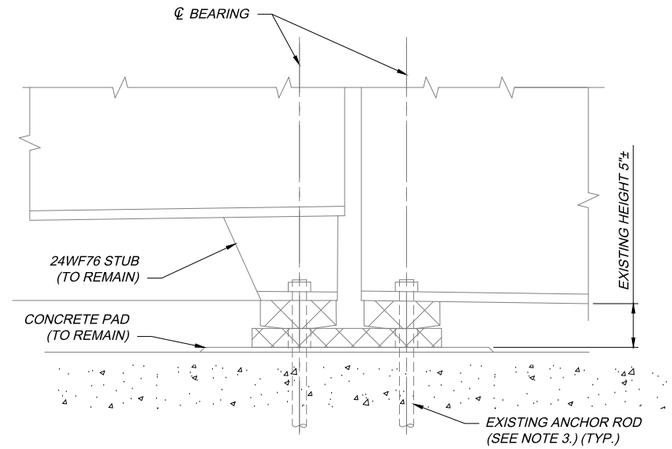

REMOVAL DETAIL FOR PIERS 1 AND 3, INTERIOR BEAM

MAXIMUM LOAD (KIPS)			
LOCATION	DEAD LOAD	LIVE LOAD (WITHOUT IMPACT)	TOTAL DESIGN LOAD
REAR ABUTMENT	19.3	37.4	56.7
REAR BEARING PIER 1	19.3	37.4	56.7
FORWARD BEARING PIER 1	34.6	46.6	81.2
PIER 2	148.8	61.3	210.1
REAR BEARING PIER 3	34.6	46.6	81.2
FORWARD BEARING PIER 3	19.3	37.4	56.7
FORWARD ABUTMENT	19.3	37.4	56.7

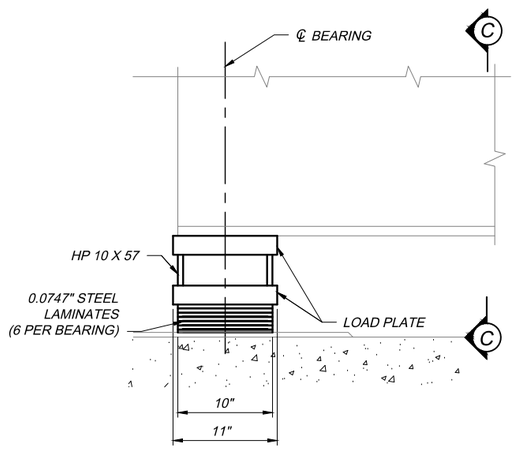

ELEVATION

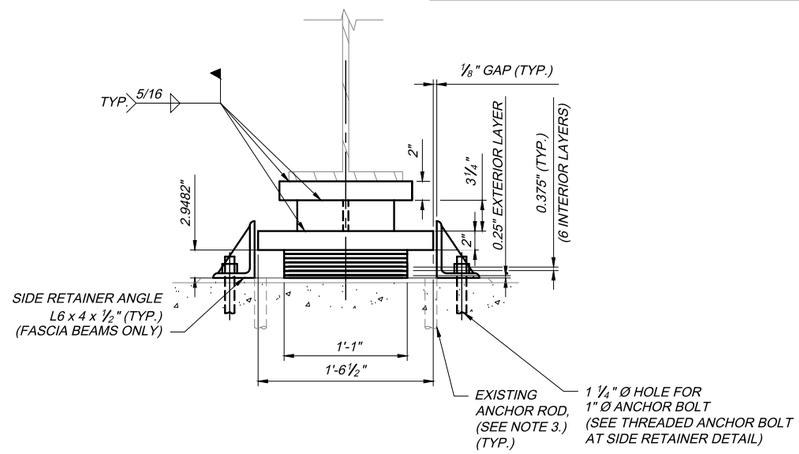

SECTION C-C

BEARING DETAIL C - PIER 1, PIER 3 (EXPANSION)

(FASCIA BEAMS SHOWN, INTERIOR BEAMS SIMILAR)

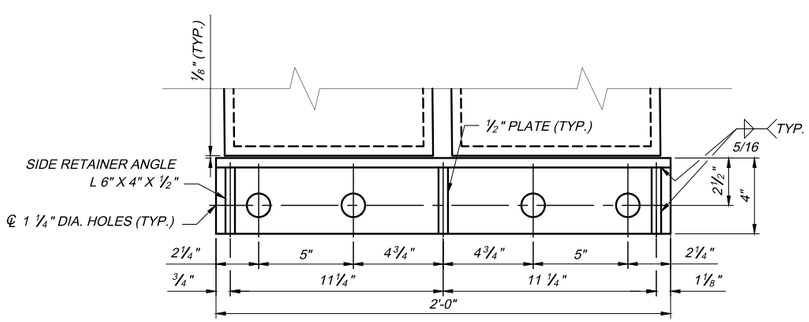

SIDE RETAINER ANGLE DETAIL

(REQUIRED ON BOTH SIDES OF EXPANSION BEARINGS AT FASCIA BEAMS ONLY)

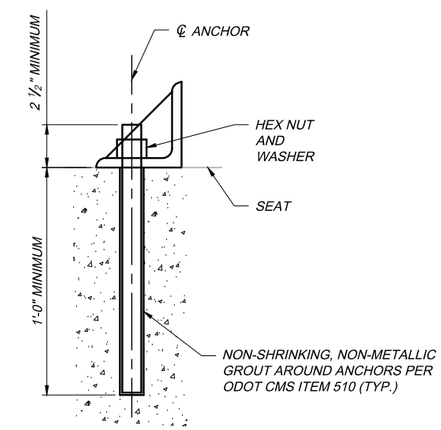

THREADED ANCHOR BOLT (AT SIDE RETAINER ANGLE)

- DENOTES PORTIONS OF BEARINGS TO BE REMOVED

NOTES:

1. FOR ELASTOMERIC BEARING NOTES, SEE SHEET 51 OF 55.
2. COSTS FOR SIDE RETAINER ANGLE ,ANCHOR ROD, HARDWARE, AND DOWEL HOLE SHALL BE INCIDENTAL TO SP 516 "REPLACE EXPANSION BEARING DEVICE".
3. CUT EXISTING ANCHOR RODS FLUSH WITH EXISTING BEAM SEATS. PAYMENT FOR THIS WORK SHALL BE INCIDENTAL TO ITEM 202 PORTIONS OF STRUCTURE REMOVED.

DESIGN AGENCY
LJB Inc. • 2270 Fairview Center Drive, Suite 200
Fairview Park, OH 44126
(937) 299-5600 fax • (937) 299-5700 fax • LJBInc.com

NO.	REVISIONS	BY	DATE
-	-	-	-
-	-	-	-
-	-	-	-

DESIGNED JLM | CHECKED NRP
DRAWN JLM | IN CHARGE DWS

BEARING DETAILS
OHIO TURNPIKE RAMP OVER JENNINGS ROAD
CUYAHOGA COUNTY
M.P. 153.9

PROJECT 43-22-04
DATE: 3/19/2021

OHIO TURNPIKE AND INFRASTRUCTURE COMMISSION

MP 1539_Jennings_SB002.dwg; 3/17/21 - 2:46pm

NOTES:

1. FOR CHAIN LINK FENCE DETAILS, SEE OTIC STANDARD DRAWING CL-1.
2. FOR FENCE POST SPACING ON ABUTMENT SLAB PARAPETS, SEE SHEET 48 OF 55.
3. FOR ABUTMENT SLAB DETAILS, SEE SHEET 48 OF 55.
4. FOR DECK JOINT DETAILS, SEE OTIC STANDARD DRAWINGS DJ-1, DJ-2, DJ-3, AND DJ-5.
5. LONGITUDINAL AND TRANSVERSE CONSTRUCTION JOINTS SHALL BE TREATED IN ACCORDANCE WITH ITEM SP 516B - SEALING OF CONSTRUCTION JOINTS.
6. FOR DEFLECTION JOINT DETAILS FOR SIDEWALK PARAPETS, SEE SHEET 54 OF 55.
7. JOINT OPENING DIMENSIONS ARE GIVEN AT 60° F.

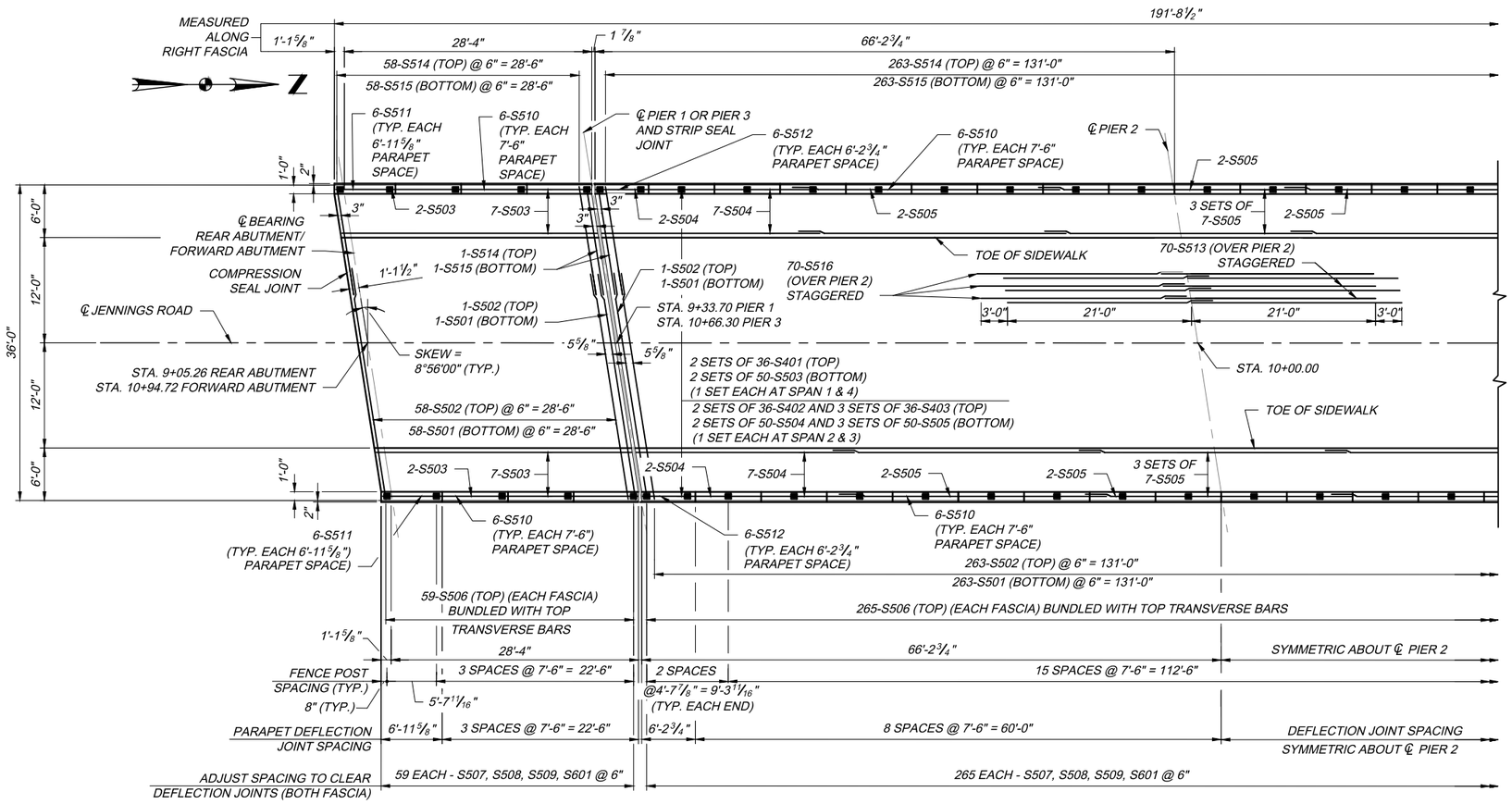

DECK SLAB PLAN

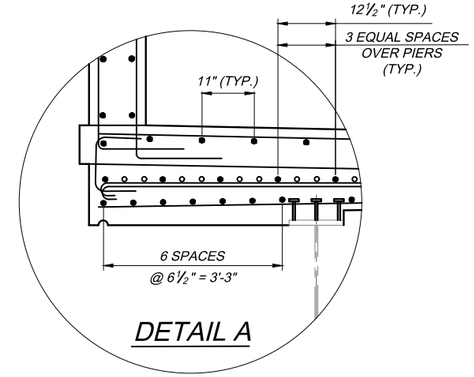

DETAIL A

MINIMUM LAP SPLICES
NO. 4 BAR = 1'-11"
NO. 5 BAR = 2'-5" UNLESS OTHERWISE NOTED

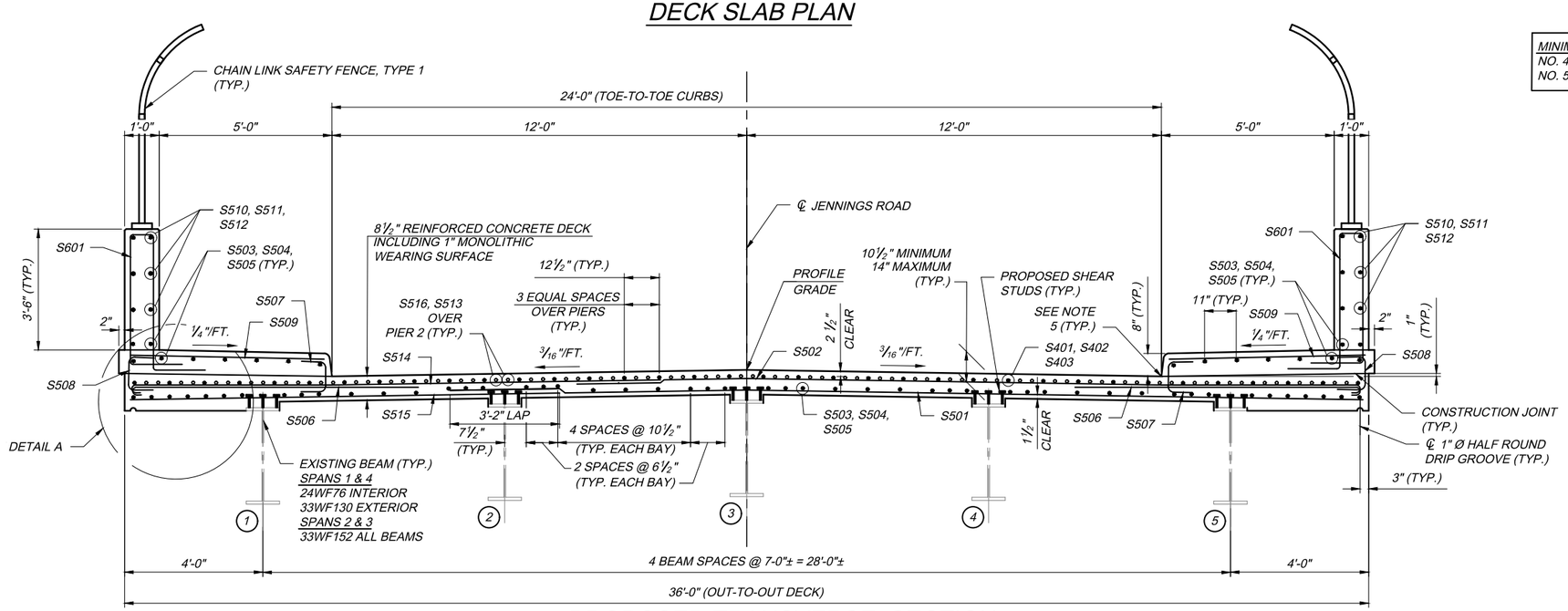

PROPOSED TRANSVERSE SECTION

DESIGN AGENCY
LJB Inc. • 22710 Fairview Center Drive, Suite 200
Fairview Park, OH 44126
(937) 299-5600 fax • (937) 299-5700 tel • LJBInc.com

NO.	REVISIONS	BY	DATE
-	-	-	-
-	-	-	-
-	-	-	-
-	-	-	-

DESIGNED	CHECKED
JLM	NRP
DRAWN	IN CHARGE
JLM	DWS

DECK SLAB PLAN AND TRANSVERSE SECTION
JENNINGS ROAD OVER OHIO TURNPIKE
CUYAHOGA COUNTY
M.P. 153.9

PROJECT 43-22-04
DATE: 3/19/2021

11/13

53/55

OHIO TURNPIKE AND INFRASTRUCTURE COMMISSION

MP 1539_Jennings_SD001.dwg: 3/17/21 - 3:04pm

TOP OF PAVEMENT ELEVATIONS (FEET)

LOCATION		REAR ABUTMENT			SPAN 1			SPAN 2				SPAN 3				SPAN 4			FORWARD ABUTMENT		
		BEGIN ABUTMENT SLAB	1/2 POINT	END ABUTMENT SLAB	℄ BEARING REAR ABUTMENT	1/2 POINT	℄ REAR BEARING PIER 1	℄ FORWARD BEARING PIER 1	1/4 POINT	1/2 POINT	3/4 POINT	℄ PIER 2	1/4 POINT	1/2 POINT	3/4 POINT	℄ REAR BEARING PIER 3	℄ FORWARD BEARING PIER 3	1/2 POINT	℄ BEARING FOWARD ABUTMENT	BEGIN ABUTMENT SLAB	1/2 POINT	END ABUTMENT SLAB
LEFT SLAB FASCIA	STATION	8+90.43	8+95.81	9+01.19	9+02.43	9+16.40	9+30.37	9+31.37	9+47.82	9+64.27	9+80.72	9+97.17	10+13.62	10+30.07	10+46.52	10+62.97	10+63.98	10+77.94	10+91.89	10+93.15	10+98.53	11+03.91
	ELEVATION	810.55	810.63	810.70	810.71	810.87	811.01	811.02	811.15	811.25	811.31	811.34	811.34	811.30	811.23	811.13	811.12	811.01	810.87	810.86	810.80	810.73
EXISTING BEAM 1	STATION				9+03.06	9+17.03	9+31.00	9+32.00	9+48.45	9+64.90	9+81.35	9+97.80	10+14.25	10+30.70	10+47.15	10+63.60	10+64.61	10+78.56	10+92.52			
	ELEVATION				810.64	810.80	810.93	810.94	811.07	811.17	811.23	811.26	811.25	811.22	811.15	811.04	811.04	810.92	810.78			
LEFT GUTTER LINE	STATION	8+91.37	8+96.75	9+02.13	9+03.37	9+17.34	9+31.31	9+32.31	9+48.76	9+65.21	9+81.66	9+98.11	10+14.56	10+31.01	10+47.46	10+63.91	10+64.92	10+78.88	10+92.83	10+94.09	10+99.47	11+04.85
	ELEVATION	810.48	810.56	810.62	810.64	810.80	810.94	810.94	811.07	811.17	811.23	811.26	811.25	811.21	811.14	811.04	811.03	810.92	810.78	810.77	810.70	810.64
EXISTING BEAM 2	STATION				9+04.16	9+18.13	9+32.10	9+33.10	9+49.55	9+66.00	9+82.45	9+98.90	10+15.35	10+31.80	10+48.25	10+64.70	10+65.71	10+79.66	10+93.62			
	ELEVATION				810.73	810.89	811.02	811.03	811.16	811.25	811.31	811.34	811.33	811.29	811.22	811.11	811.11	810.99	810.85			
℄ JENNINGS ROAD AND EXISTING BEAM 3	STATION	8+93.26	8+98.64	9+04.02	9+05.26	9+19.23	9+33.20	9+34.20	9+50.65	9+67.10	9+83.55	10+00.00	10+16.45	10+32.90	10+49.35	10+65.80	10+66.81	10+80.77	10+94.72	10+95.98	11+01.36	11+06.74
	ELEVATION	810.70	810.77	810.84	810.85	811.01	811.14	811.15	811.27	811.36	811.42	811.45	811.44	811.40	811.32	811.21	811.21	811.09	810.95	810.93	810.87	810.80
EXISTING BEAM 4	STATION				9+06.36	9+20.33	9+34.30	9+35.30	9+51.75	9+68.20	9+84.65	10+01.10	10+17.55	10+34.00	10+50.45	10+66.90	10+67.91	10+81.87	10+95.82			
	ELEVATION				810.75	810.91	811.04	811.05	811.17	811.26	811.31	811.34	811.33	811.28	811.21	811.10	811.09	810.97	810.82			
RIGHT GUTTER LINE	STATION	8+95.15	9+00.53	9+05.91	9+07.15	9+21.12	9+35.09	9+36.09	9+52.54	9+68.99	9+85.44	10+01.89	10+18.34	10+34.79	10+51.24	10+67.69	10+68.70	10+82.65	10+96.61	10+97.87	11+03.25	11+08.63
	ELEVATION	810.54	810.60	810.67	810.69	810.84	810.97	810.98	811.10	811.18	811.24	811.26	811.25	811.20	811.12	811.01	811.00	810.88	810.74	810.72	810.66	810.59
EXISTING BEAM 5	STATION				9+07.46	9+21.43	9+35.40	9+36.40	9+52.85	9+69.30	9+85.75	10+02.20	10+18.65	10+35.10	10+51.55	10+68.00	10+69.01	10+82.97	10+96.92			
	ELEVATION				810.69	810.84	810.97	810.98	811.10	811.18	811.24	811.26	811.25	811.20	811.12	811.01	811.00	810.88	810.73			
RIGHT SLAB FASCIA	STATION	8+96.09	9+01.47	9+06.85	9+08.09	9+22.06	9+36.03	9+37.03	9+53.48	9+69.93	9+86.38	10+02.83	10+19.28	10+35.73	10+52.18	10+68.63	10+69.64	10+83.59	10+97.55	10+98.81	11+04.19	11+09.57
	ELEVATION	810.63	810.70	810.77	810.78	810.93	811.06	811.07	811.19	811.27	811.32	811.34	811.33	811.28	811.20	811.09	811.08	810.96	810.81	810.80	810.73	810.66

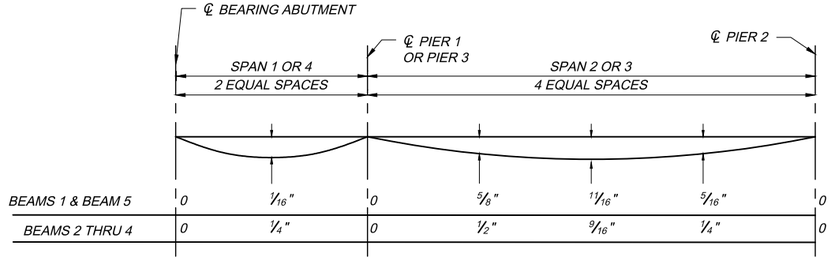

DEFLECTION DUE TO CONCRETE

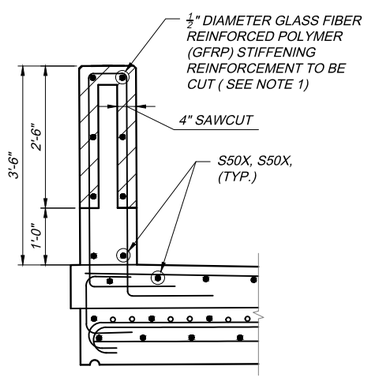

DEFLECTION JOINT DETAIL

NOTES :

DEFLECTION JOINTS FOR CONCRETE PARAPETS:

SAWCUT 1 1/4 INCH DEEP DEFLECTION JOINTS ALONG THE PERIMETER OF THE PARAPET WHEN THE CONCRETE IS STILL GREEN OR AS SOON AS THE SAW CAN BE OPERATED WITHOUT DAMAGING THE CONCRETE.

AFTER THE CONCRETE CURING PERIOD SPECIFIED IN SP 511B HAS BEEN REACHED, PERFORM 4" SAWCUT AS SHOWN ON THIS SHEET.

THE CONTRACTOR HAS AN OPTION TO PERFORM FULL DEPTH SAWCUT. HOWEVER, THE SAWCUT SHALL NOT BE LESS THAN 1'-0 1/2" FROM THE TOP OF THE CONCRETE DECK SLAB.

USE AN EDGE GUIDE, FENCE, OR JIG TO ENSURE THAT THE CUT JOINT IS STRAIGHT, TRUE, AND ALIGNED ON ALL FACES OF THE PARAPET. THE JOINT WIDTH SHALL BE THE WIDTH OF THE SAW BLADE, A NOMINAL WIDTH OF 1/4 INCH.

SEAL THE PERIMETER OF THE DEFLECTION JOINTS TO A MINIMUM DEPTH OF ONE INCH WITH A POLYURETHANE OR POLYMERIC MATERIAL CONFORMING TO ASTM C920, TYPE S. LEAVE THE BOTTOM 1/2 INCH OF BOTH THE INSIDE AND OUTSIDE FACES OF THE PARAPET UNSEALED TO ALLOW ANY WATER WHICH MAY ENTER THE JOINT TO ESCAPE.

AT EACH DEFLECTION JOINT LOCATION, USE GLASS FIBER REINFORCED POLYMER (GFRP) REINFORCEMENT TO MAINTAIN THE RIGIDITY OF THE CAGE ACROSS THE PROPOSED JOINTS. OTHER NON-FERROUS REINFORCEMENT MAY BE PROPOSED FOR USE, SUBJECT TO APPROVAL BY THE ENGINEER.

ALL LABOR AND MATERIALS NECESSARY FOR CONSTRUCTION OF DEFLECTION JOINTS SHALL BE INCIDENTAL TO SP 511B.

- DENOTES 4" SAWCUT FOR DEFLECTION JOINT

DESIGN AGENCY
LJB Inc. • 2270 Fairview Center Drive, Suite 200
Fairview Park, OH 44126
(937) 299-5600 ☎ • (937) 299-5700 fax • LJBInc.com

NO.	REVISIONS	BY	DATE
-	-	-	-
-	-	-	-
-	-	-	-

DESIGNED JLM | CHECKED NRP
DRAWN JLM | IN CHARGE DWS

DECK SLAB ELEVATIONS
JENNINGS ROAD OVER OHIO TURNPIKE
CUYAHOGA COUNTY
M.P. 153.9

PROJECT 43-22-04
DATE: 3/19/2021

OHIO TURNPIKE AND INFRASTRUCTURE COMMISSION

MP 1539_Jennings_SS001.dwg; 3/17/21 - 2:47pm

ABUTMENT REINFORCING SCHEDULE

BAR MARK	NO. REQUIRED			BAR LENGTH	BAR TYPE	DIMENSIONS						WEIGHT LBS.
	REAR	FORWARD	TOTAL			A	B	C	D	E	INCR.	
A401	25	25	50	10'-3"	STR.							342
A402	1 SERIES OF 6	1 SERIES OF 6	2 SERIES OF 6	11'-11" TO 12'-9"	STR.						2"	99
A403	1	1	2	12'-6"	STR.							17
A404	1	1	2	12'-0"	STR.							16
A405	1 SERIES OF 6	1 SERIES OF 6	2 SERIES OF 6	11'-9" TO 12'-7"	STR.						2"	98
A501	14	14	28	36'-0"	STR.							1,051
A502	1	1	2	35'-9"	STR.							75
A503	1 SERIES OF 7	1 SERIES OF 7	2 SERIES OF 7	12'-0" TO 12'-9"	STR.						1½"	181
A504	50	50	100	5'-9"	STR.							600
A505	52	52	104	2'-7"	5	1'-2"	10"					280
A506	52	52	104	2'-6"	5	1'-1"	10"					271
A507	8	8	16	12'-0"	STR.							200
A508	8	8	16	12'-6"	STR.							209
A509	1 SERIES OF 7	1 SERIES OF 7	2 SERIES OF 7	11'-9" TO 12'-6"	STR.						1½"	177
A510	11	11	22	26'-1"	1	25'-6"						599
A511	24	24	48	8'-2"	1	7'-7"						409
A512	1	1	2	25'-10"	1	25'-3"						54
A513	6	6	12	10'-3"	STR.							128
A514	48	48	96	2'-10"	4	10"	2'-1"					284
A515	12	12	24	14'-1"	1	13'-6"						353
A601	6	6	12	5'-6"	STR.							99
A602	36	36	72	3'-0"	13	4"	4"	11"	11"	12"		324
A603	6	6	12	6'-4"	1	5'-8"						114
A604	52	52	104	10'-10"	30	1'-6"	8"	3'-11"	3'-9"			1,692
A801	48	48	96	12'-3"	2	10'-5"						3,140
A802	1 SERIES OF 11	1 SERIES OF 11	2 SERIES OF 11	13'-9" TO 14'-7"	2	11'-11" TO 12'-9"					1"	832
A803	1	1	2	14'-4"	2	12'-6"						77
A804	1	1	2	13'-10"	2	12'-0"						74
A805	1 SERIES OF 11	1 SERIES OF 11	2 SERIES OF 11	13'-7" TO 14'-5"	2	11'-9" TO 12'-7"					1"	822
TOTAL ABUTMENT REINFORCING STEEL WEIGHT (LBS) =												12,616

WALL REINFORCING SCHEDULE

BAR MARK	NO. REQUIRED	BAR LENGTH	BAR TYPE	DIMENSIONS						WEIGHT LBS.
				A	B	C	D	E	INCR.	
W501	104	4'-3"	STR.							461
W502	40	7'-6"	STR.							313
W503	24	6'-3"	STR.							156
W504	16	5'-0"	STR.							83
TOTAL WALL REINFORCING STEEL WEIGHT (LBS.) =										1,014

SUPERSTRUCTURE REINFORCING SCHEDULE

S401	72	29'-0"	STR.							1,395
S402	72	25'-0"	STR.							1,202
S403	108	30'-0"	STR.							2,164
S501	383	26'-6"	STR.							10,586
S502	383	23'-4"	1	22'-9"						9,321
S503	136	29'-0"	STR.							4,114
S504	136	26'-0"	STR.							3,688
S505	204	30'-0"	STR.							6,383
S506	766	8'-11"	1	8'-4"						7,124
S507	766	2'-4"	5	11"	10"					1,864
S508	766	2'-7"	5	1'-2"	10"					2,064
S509	766	5'-9"	STR.							4,594
S510	264	7'-0"	STR.							1,927
S511	24	6'-6"	STR.							163
S512	24	5'-9"	STR.							144
S513	70	24'-0"	STR.							1,752
S514	383	16'-1"	1	15'-6"						6,425
S515	383	12'-6"	STR.							4,993
S516	70	23'-6"	STR.							1,716
S601	383	10'-10"	30	1'-6"	8"	3'-11"	3'-9"			6,232
TOTAL SUPERSTRUCTURE REINFORCING STEEL WEIGHT (LBS.) =										77,851
TOTAL REINFORCING STEEL WEIGHT (LBS.) =										91,481

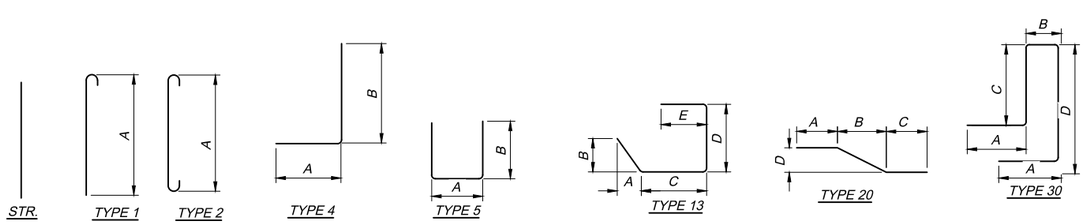

NOTES:

1. ALL REINFORCING BARS SHALL BE EPOXY COATED.
2. BAR DIMENSIONS ARE OUT TO OUT UNLESS OTHERWISE INDICATED.
3. BAR SIZE IS INDICATED IN THE BAR MARK BY THE FIRST DIGIT.
4. EPOXY COATED REINFORCING STEEL SUPPORT: IN ACCORDANCE WITH THE REQUIREMENTS OF SP 509 AND 509.09, THE TOP AND BOTTOM MATS OF THE LONGITUDINAL AND TRANSVERSE EPOXY COATED REINFORCING STEEL SHALL BE SUPPORTED BY APPROVED EPOXY COATED DEVICES WITH SPACING NOT EXCEEDING 3'-0" CENTERS IN EACH DIRECTION. BROKEN CONCRETE, BRICKS, ETC. SHALL NOT BE USED FOR SUPPORT OF REINFORCING STEEL.

DESIGN AGENCY
LJB Inc. • 22710 Fairview Center Drive, Suit 200
Fairview Park, OH 44126
(937) 299-5600 ★ (937) 299-5700 fax ★ LJBInc.com

NO.	REVISIONS	BY	DATE
-	-	-	-
-	-	-	-
-	-	-	-

DESIGNED JLM | CHECKED NRP | DRAWN JLM | IN CHARGE DWS

REINFORCING SCHEDULE
JENNINGS ROAD OVER OHIO TURNPIKE
CUYAHOGA COUNTY
M.P. 153.9

PROJECT 43-22-04
DATE: 3/19/2021

OHIO TURNPIKE AND INFRASTRUCTURE COMMISSION

MP 1539_Jennings_SL001.dwg: 3/17/21 - 2:47pm