UTILITIES

THE CONTRACTOR SHALL USE THE FOLLOWING PROCEDURE AT EACH LOCATION WHERE WORK IS PERFORMED, IN ACCORDANCE WITH SECTIONS 105.07 AND 107.16 IN THE CONSTRUCTION AND MATERIALS SPECIFICATIONS:

THE CONTRACTOR SHALL NOTIFY THE PROJECT ENGINEER, OHIO811, THE OHIO GAS PRODUCERS UNDERGROUND PROTECTION SERVICE (OGPUPS) AND ALL NON REGISTERED UTILITY OWNERS AT LEAST TWO (2) WORKING DAYS PRIOR TO COMMENCING CONSTRUCTION OPERATIONS IN ALL AREAS.
OHIO811 1-800-362-2764 (CONTACT LIMITED BASIS PARTICIPANTS DIRECTLY)
OGPUPS 1-800-925-0988
OTIC 440-821-3366 REX UNDERWOOD

LISTED BELOW ARE ALL UTILITIES LOCATED WITHIN THE PROJECT CONSTRUCTION LIMITS TOGETHER WITH THEIR RESPECTIVE OWNERS:

OHIO EDISON COMPANY
2508 WEST PERKINS AVENUE
SANDUSKY, OHIO 44870
ATTN: JIM ROHRBACHER
419-627-6881

LUMEN
ATTN: DOUG HOLLOWAY
216-426-6010
DOUG.HOLLOWAY@LUMEN.COM

AT&T OF OHIO
130 N. ERIE STREET, ROOM 714
TOLEDO, OHIO 43604
ATTN: ROB FEY
419-245-5004

ERIE COUNTY DEPT. OF ENVIRONMENTAL SERVICES
554 RIVER ROAD
HURON, OHIO 44839
ATTN: JACKSON SCHAEFER
419-433-7303 EXT. 2701

THE LOCATION OF THE UNDERGROUND UTILITIES SHOWN ON THE PLANS ARE AS OBTAINED FROM THE OWNERS AS REQUIRED BY SECTION 153.64 OHIO REVISED CODE.

ORIGINAL CONSTRUCTION PLANS

ORIGINAL CONSTRUCTION PLANS SHOWING THE ORIGINAL ALIGNMENT, PROFILE AND DETAILS OF THE BRIDGE ARE AVAILABLE ON BID EXPRESS WITH THE OTHER CONTRACT DOCUMENTS.

WORK LIMITS

THE WORK LIMITS SHOWN ON THESE PLANS ARE FOR PHYSICAL CONSTRUCTION ONLY. PROVIDE THE INSTALLATION AND OPERATION OF ALL WORK ZONE TRAFFIC CONTROL AND WORK ZONE TRAFFIC CONTROL DEVICES REQUIRED BY THESE PLANS WHETHER INSIDE OR OUTSIDE THESE WORK LIMITS.

CONNECTION BETWEEN EXISTING AND PROPOSED GUARDRAIL

WHEN IT IS NECESSARY TO SPLICE PROPOSED GUARDRAIL TO EXISTING GUARDRAIL, ONLY THE EXISTING GUARDRAIL SHALL BE CUT, DRILLED, OR PUNCHED. THE CONNECTION SHALL BE MADE USING A 'W-BEAM, BEAM SPLICE' AS SHOWN IN AASHTO M 180-12, EXCEPT THE BEAM WASHERS ARE NOT TO BE USED. SEE ODOT STANDARD CONSTRUCTION DRAWING MGS-4.3. THE TRANSITION IN HEIGHT WILL OCCUR IN THE LAST TWENTY-FIVE (25) FEET OF EXISTING GUARDRAIL. PAYMENT SHALL BE INCLUDED IN THE CONTRACT PRICE FOR THE RESPECTIVE GUARDRAIL ITEMS.

REVIEW OF DRAINAGE FACILITIES

BEFORE ANY WORK IS STARTED ON THE PROJECT AND AGAIN BEFORE FINAL ACCEPTANCE BY THE OTIC, REPRESENTATIVES OF THE OTIC AND THE CONTRACTOR, SHALL MAKE AN INSPECTION OF ALL EXISTING SEWERS WHICH ARE TO REMAIN IN SERVICE AND WHICH MAY BE AFFECTED BY THE WORK. THE CONDITION OF THE EXISTING CONDUITS AND THEIR APPURTENANCES SHALL BE DETERMINED FROM FIELD OBSERVATIONS. RECORDS OF THE INSPECTION SHALL BE KEPT IN WRITING BY THE OTIC REPRESENTATIVE.

ALL NEW CONDUITS, INLETS, CATCH BASINS, AND MANHOLES CONSTRUCTED AS PART OF THE PROJECT SHALL BE FREE OF ALL FOREIGN MATTER AND IN A CLEAN CONDITION BEFORE THE PROJECT WILL BE ACCEPTED BY THE OHIO TURNPIKE AND INFRASTRUCTURE COMMISSION.

ALL EXISTING SEWERS INSPECTED INITIALLY BY THE ABOVE MENTIONED PARTIES SHALL BE MAINTAINED AND LEFT IN A CONDITION REASONABLY COMPARABLE TO THAT DETERMINED BY THE ORIGINAL INSPECTION OR REVISED AS SHOWN IN THESE PLANS. ANY CHANGE IN THE CONDITION RESULTING FROM THE CONTRACTOR'S OPERATIONS SHALL BE CORRECTED BY THE CONTRACTOR TO THE SATISFACTION OF THE CHIEF ENGINEER.

PAYMENT FOR ALL OPERATIONS DESCRIBED ABOVE SHALL BE INCLUDED IN THE CONTRACT PRICE FOR THE PERTINENT SP 611 AND ITEM 611 CONDUIT ITEMS.

SP 400 AND SP 400S MODIFICATIONS FOR THIS PROJECT

THE FOLLOWING MODIFICATION(S) TO SP 400 WILL APPLY FOR THIS PROJECT:
- THE USE OF A MATERIAL TRANSFER DEVICE (MTD) WILL NOT BE REQUIRED TO PERFORM THE REPAIRS FOR THIS PROJECT.
- THE COMMISSION WILL REVIEW THE GENERAL RIDEABILITY OF THE WORK PERFORMED FOR THE PROJECT AS CALLED FOR IN SECTION III.I. TOLERANCES OF THE FINISHED SURFACE.

THE FOLLOWING MODIFICATION(S) TO SP 400S APPLY FOR THIS PROJECT:
- A CLASS 1 INERTIAL PROFILOMETER IS NOT REQUIRED FOR THIS PROJECT.
- PAVEMENT REPAIRS WILL BE EVALUATED IN ACCORDANCE WITH THE SP 400S.C. ROLLING STRAIGHT EDGE TOLERANCES.
- ANY CORRECTIVE ACTION REQUIRED SHALL BE IN ACCORDANCE WITH SP 400S.E. CORRECTIVE ACTION.

3

SURVEYING PARAMETERS (M.P. 111.2)

PRIMARY PROJECT CONTROL MONUMENTS GOVERN ALL POSITIONING ON THIS PROJECT. SEE THIS SHEET OF THE PLANS FOR A TABLE CONTAINING PROJECT CONTROL INFORMATION.

USE THE FOLLOWING PROJECT CONTROL, VERTICAL POSITIONING, AND HORIZONTAL POSITIONING PARAMETERS FOR ALL SURVEYING:

PROJECT CONTROL
POSITIONING METHOD: ODOT VRS
MONUMENT TYPE: 5/8 INCH IRON PIN WITH TRAVERSE CAP

VERTICAL POSITIONING
ORTHOMETRIC HEIGHT DATUM: NAVD 88
GEOID: 12B

HORIZONTAL POSITIONING
REFERENCE FRAME: NAD 83 (2011)
ELLIPSOID: GRS 80
MAP PROJECTION: LAMBERT CONFORMAL CONIC
COORDINATE SYSTEM: OHIO STATE PLANE - NORTH ZONE
PROJECT SCALE FACTOR: 1.0000779449
ORIGIN OF COORDINATE SYSTEM: (0;0)

USE THE POSITIONING METHODS AND MONUMENT TYPE USED IN THE ORIGINAL SURVEY TO RESTORE ALL MONUMENTS RELATED TO PRIMARY PROJECT CONTROL THAT ARE DAMAGED OR DESTROYED BY CONSTRUCTION ACTIVITIES. RESTORE THE DAMAGED OR DESTROYED MONUMENTS IN ACCORDANCE WITH CMS 623.

UNITS ARE IN U.S. SURVEY FEET.

OTIC 43-24-06 STATE ROUTE 99 CONTROL (M.P. 111.2)

POINT	NORTHING	EASTING	ELEV.	STATION	OFFSET	DESCRIPTION
100	609283.028	1900552.637	715.30	268+89.81	64.78' RT.	IRON PIN SET
101	609095.515	1900715.418	700.57	270+80.86	223.39' RT	IRON PIN SET
102	609234.845	1900845.260	715.24	271+86.35	64.84' RT.	IRON PIN SET
103	609415.923	1900551.459	715.35	268+67.08	66.16' LT.	IRON PIN SET
104	609595.518	1900680.934	697.14	269+65.70	264.39' LT.	IRON PIN SET
105	609365.277	1900853.848	715.69	271+73.68	64.84' LT.	IRON PIN SET

ITEM 304 - AGGREGATE BASE, AS PER PLAN (M.P. 111.2)

GRANULATED SLAG (GS) SHALL NOT BE PERMITTED FOR THIS ITEM. ALL OTHER REQUIREMENTS OF SECTION 304 AND 703.17 OF THE CONSTRUCTION AND MATERIAL SPECIFICATIONS SHALL STILL BE APPLICABLE.

CROSSINGS AND CONNECTIONS TO EXISTING PIPES AND UTILITIES (M.P. 111.2)

WHERE PLANS PROVIDE FOR A PROPOSED CONDUIT TO BE CONNECTED TO, OR CROSS OVER OR UNDER AN EXISTING SEWER OR UNDERGROUND UTILITY, THE CONTRACTOR SHALL LOCATE THE EXISTING PIPES OR UTILITIES BOTH AS TO LINE AND GRADE BEFORE STARTING TO LAY THE PROPOSED CONDUIT.

IF IT IS DETERMINED THAT THE ELEVATION OF THE EXISTING CONDUIT, OR EXISTING APPURTENANCE TO BE CONNECTED, DIFFERS FROM THE PLAN ELEVATION OR RESULTS IN A CHANGE IN THE PLAN CONDUIT SLOPE, THE ENGINEER SHALL BE NOTIFIED BEFORE STARTING CONSTRUCTION OF ANY PORTION OF THE PROPOSED CONDUIT WHICH WILL BE AFFECTED BY THE VARIANCE IN THE EXISTING ELEVATIONS.

IF IT IS DETERMINED THAT THE PROPOSED CONDUIT WILL INTERSECT AN EXISTING SEWER OR UNDERGROUND UTILITY IF CONSTRUCTED AS SHOWN ON THE PLAN, THE ENGINEER SHALL BE NOTIFIED BEFORE STARTING CONSTRUCTION OF ANY PORTION OF THE PROPOSED CONDUIT WHICH WOULD BE AFFECTED BY THE INTERFERENCE WITH AN EXISTING FACILITY.

PAYMENT FOR ALL THE OPERATIONS DESCRIBED ABOVE SHALL BE INCLUDED IN THE CONTRACT PRICE FOR THE PERTINENT 611 CONDUIT ITEM.

SURVEYING PARAMETERS (M.P. 119.3)

PRIMARY PROJECT CONTROL MONUMENTS GOVERN ALL POSITIONING ON THIS PROJECT. SEE THIS SHEET FOR A TABLE CONTAINING PRIMARY PROJECT CONTROL INFORMATION.

USE THE FOLLOWING PRIMARY PROJECT CONTROL, VERTICAL POSITIONING, AND HORIZONTAL POSITIONING FOR ALL SURVEYING:

PRIMARY PROJECT CONTROL:
POSITIONING METHOD: ODOT VRS
MONNUMENT TYPE: 5/8 INCH IRON PIN WITH TRAVERSE CAP

VERTICAL POSITIONING:
ORTHOMETRIC HEIGHT DATUM: NAVD 88
GEOID: 12B

HORIZONTAL POSITIONING:
REFERENCE FRAME: NAD 83 (2011)
ELLIPSOID: GRS 80
MAP PROJECTION: LAMBERT CONFORMAL CONIC
COORDINATE SYSTEM: OHIO STATE PLANE - NORTH ZONE
COMBINED SCALE FACTOR: 1.0000762951
ORIGIN OF COORDINATE SYSTEM: (0,0)

USE THE POSITIONING METHODS AND MONUMENT TYPE USED IN THE ORIGINAL SURVEY TO RESTORE ALL MONUMENTS RELATED TO PRIMARY PROJECT CONTROL THAT ARE DAMAGED OR DESTROYED BY CONSTRUCTION ACTIVITIES. RESTORE THE DAMAGED OR DESTROYED MONUMENTS IN ACCORDANCE WITH CMS 623.

UNITS ARE IN U.S. SURVEY FEET.

OTIC 43-24-06 STATE ROUTE 13 CONTROL (M.P. 119.3)

POINT	NORTHING	EASTING	ELEV.	STATION	OFFSET	DESCRIPTION
120	603935.398	1942611.748	627.28	698+49.41	64.01' RT.	IRON PIN SET
121	603642.957	1942546.800	648.23	698+25.98	362.69' RT	IRON PIN SET
122	603904.594	1942817.929	624.53	700+58.17	64.50' RT.	IRON PIN SET
123	604141.280	1942637.913	647.32	698+46.18	143.50' LT.	IRON PIN SET
124	604332.622	1942859.097	645.98	700+36.32	364.95' LT.	IRON PIN SET
125	604049.688	1942731.925	626.26	699+51.88	66.46' LT.	IRON PIN SET
126	604029.595	1942853.806	624.49	700+75.39	64.40' LT.	IRON PIN SET

EROSION CONTROL (M.P. 119.3)

IT IS THE INTENT OF THE PROJECT TO NOT DISTURB ANY SEEDED AREAS AND/OR DRAINAGE ELEMENTS. ANY WORK INVOLVING SEEDED AREAS, DRAINAGE ELEMENTS OR EROSION CONTROL SHALL BE CONSIDERED INCIDENTAL TO THE PROJECT COST AND SHALL BE REPAIRED/PROTECTED AS DIRECTED BY THE ENGINEER.

ALL LABOR, MATERIALS, EQUIPMENT AND INCIDENTALS NECESSARY TO COMPLETE THE WORK SHALL BE CONSIDERED INCIDENTAL TO THE PROJECT AND NO ADDITIONAL COMPENSATION SHALL BE GRANTED.

ITEM 209 - LINEAR GRADING, AS PER PLAN (M.P. 111.2)

CONTRACTOR SHALL FOLLOW ODOT CMS FOR ITEM 209 LINEAR GRADING WITHIN THE LIMITS OF THE RESURFACING TO REESTABLISH A SMOOTH GRADED SHOULDER.

3

DESIGN AGENCY
Michael Baker INTERNATIONAL
MICHAEL BAKER INTL.
11 WEST BROAD STREET, EAST SUITE 2300,
COLUMBUS, OHIO 43215
O: 216-464-4414
F: 216-464-6302

NO.	REVISIONS	BY	DATE
-	-	-	-
-	-	-	-
-	-	-	-
-	-	-	-

DESIGNED	CHECKED	DESIGNED	CHECKED
LJS	KGJ	PS	CDC
	IN CHARGE	DRAWN	

ERIE COUNTY

ROADWAY GENERAL NOTES

M.P. 111.2 & M.P. 119.3

PROJECT 43-24-06

DATE: 03/07/23

OHIO TURNPIKE AND INFRASTRUCTURE COMMISSION

71-21-07_SR099_GENERAL NOTES.dwg; 8/01/23 - 10:28pm

GENERAL SUMMARY

ITEM NO.	TOTAL	UNIT	DESCRIPTION			
			GENERAL	GENERAL	M.P. 111.2	M.P. 119.3
IB.ART.6	LUMP	LUMP SUM	PREMIUM FOR CONTRACT PERFORMANCE BOND AND PAYMENT BOND	LUMP		
SP 614	LUMP	LUMP SUM	MAINTAINING TRAFFIC	LUMP		
SP 619	LUMP	LUMP SUM	FIELD OFFICE	LUMP		
SP 623	LUMP	LUMP SUM	CONSTRUCTION LAYOUT SURVEY	LUMP		
624	LUMP	LUMP SUM	MOBILIZATION	LUMP		
			ROADWAY			
202	5	FOOT	CURB REMOVED		5	
202	295	FOOT	GUARDRAIL REMOVED		100	195
202	260	SQ. YD.	PAVEMENT REMOVED			260
202	8	EACH	BRIDGE TERMINAL ASSEMBLY REMOVED		4	4
202	940	FOOT	CONCRETE BARRIER REMOVED		940	
203	40	CU. YD.	EXCAVATION			40
204	244	SQ. YD.	SUBGRADE COMPACTION			244
301	61	CU. YD.	ASPHALT CONCRETE BASE, PG 64-22			61
209	5	STA	LINEAR GRADING, AS PER PLAN		5	
251	500	SQ. YD.	PARTIAL DEPTH PAVEMENT REPAIR		500	
254 3	5835	SQ. YD.	PAVEMENT PLANING, ASPHALT CONCRETE		5835 3	
255	500	SQ. YD.	FULL DEPTH PAVEMENT REMOVAL AND RIGID REPLACEMENT		500	
255	500	SQ. YD.	FULL DEPTH PAVEMENT REMOVAL AND RIGID REPLACEMENT (USING RAPID REPAIR CONCRETE MIX MATERIAL)		500	
255	1500	FOOT	FULL DEPTH PAVEMENT SAWING		1500	
SP302	67	CU. YD.	BITUMINOUS AGGREGATE BASE, PG64-22		67	
SP304	41	CU. YD.	AGGREGATE BASE			41
SP304	28	CU. YD.	AGGREGATE BASE, AS PER PLAN		28	
SP304	21	CU. YD.	GRANULAR EMBANKMENT		21	
SP402	85	CU. YD.	ASPHALT CONCRETE INTERMEDIATE COURSE OR RECYCLED ASPHALT CONCRETE INTERMEDIATE COURSE, PG76-22		85	
~~SP404~~	~~100~~	~~CU. YD.~~	~~ASPHALT CONCRETE SURFACE COURSE, USING CRUSHED STONE, PG64-22~~		~~100~~	3
SP404	245	CU. YD.	ASPHALT CONCRETE SURFACE COURSE, USING CRUSHED SLAG, PG76-22 (FR)		245	
~~SP404A~~	~~4100~~	~~FOOT~~	~~JOINT SEALER~~		~~4100~~	
~~SPECIAL~~	~~2860~~	~~FOOT~~	~~SAWCUT JOINT~~		~~2860~~	
407	820	GAL.	NON-TRACKING TACK COAT		790	30
441	8	CU. YD.	ASPHALT CONCRETE SURFACE COURSE, TYPE 1, (449), PG64-22			8
441	12	CU. YD.	ASPHALT CONCRETE INTERMEDIATE COURSE, TYPE 1, (449)			12
601	3	SQ. YD.	TIED CONCRETE BLOCK MAT WITH TYPE 2 UNDERLAYMENT			3
606	88	FOOT	GUARDRAIL, TYPE MGS			88
606	100	FOOT	GUARDRAIL, TYPE MGS WITH LONG POSTS		100	
606	6	EACH	MGS BRIDGE TERMINAL ASSEMBLY, TYPE 1		2	4
606	2	EACH	MGS BRIDGE TERMINAL ASSEMBLY, TYPE 2		2	
609	5	FOOT	CURB, TYPE 4-C		5	
609	24	FOOT	CURB, TYPE 6			24
SP614ZP	4400	HOURS	ZONE PERSON WITH ZONE VEHICLE		4400	
614	8	EACH	WORK ZONE IMPACT ATTENUATOR FOR 24" WIDE HAZARDS (UNIDIRECTIONAL OR BIDIRECTIONAL)		8	
614	20	EACH	REPLACEMENT SIGN		20	
614	200	EACH	REPLACEMENT DRUM		200	
614	2	EACH	WORK ZONE CROSSOVER LIGHTING SYSTEM		2	
614	4	CU. YD.	ASPHALT CONCRETE FOR MAINTAINING TRAFFIC		4	
614	380	DAYS	PORTABLE CHANGEABLE MESSAGE SIGN, AS PER PLAN		380	
~~SP614C~~	~~12.4~~	~~MILE~~	~~REMOVAL OF PAVEMENT MARKING~~		~~12.4~~	
~~SPECIAL~~	~~LUMP~~	~~LUMP SUM~~	~~EXISTING CROSSOVER TO BE CLOSED / RE-OPENED~~		~~LUMP~~	3
616	10	MGAL.	WATER		10	
SP622	3240	FOOT	PORTABLE BARRIER, 32" (WITH GLARE SCREEN)		3240	
SP622	12080	FOOT	PORTABLE BARRIER, 32" (WITHOUT GLARE SCREEN)		12080	
630	16	SQ. FT.	SIGNING MISC.: ADDITIONAL SIGNS, GROUND MOUNTED, AS DIRECTED BY THE ENGINEER		16	
642	2.4	MILE	PAVEMENT MARKING MISC.: FINAL PAVEMENT MARKING PREPARATION		2.12	0.28
642	0.19	MILE	EDGE LINE, 4", TYPE 1 (WHITE)			0.19
642	0.09	MILE	CENTERLINE, 4", TYPE 1 (YELLOW)			0.09
642	1.95	MILE	EDGE LINE, 6", TYPE 1 (WHITE)		1.95	
642	1.95	MILE	EDGE LINE, 6", TYPE 1 (YELLOW)		1.95	
642	3.9	MILE	LANE LINE, 6", TYPE 1 (WHITE)		3.90	
SPECIAL	2.3	MILE	SONIC NAP ALERT PATTERN		2.3	

71-21-07_SR099_GENERAL SUMMARY 1 OF 2.dwg; 8/08/23 - 1:40pm

DESIGN AGENCY
Michael Baker INTERNATIONAL
MICHAEL BAKER INTL.
1111 LAKESIDE AVE.
EAST SUITE 2300
CLEVELAND, OH 44114
O 216-664-0433
F 216-664-6532

DATE	BY	REVISIONS	NO.
-	-	-	-
-	-	-	-
-	-	-	-

DESIGNED	CHECKED	NO.
KGJ	CDC	-
DRAWN	IN CHARGE	
KGJ	CDC	

OHIO TURNPIKE

OHIO TURNPIKE AND INFRASTRUCTURE COMMISSION

GENERAL SUMMARY

ERIE COUNTY

M.P. 111.2 & M.P. 119.3

PROJECT 43-24-06

DATE: 03/07/23

TEMPORARY TRAFFIC CONTROL NOTES - M.P. 111.2

ITEM SP 614 MAINTAINING TRAFFIC
MAINTENANCE OF TRAFFIC SEQUENCE:
M.P. 111.2 MAINTENANCE OF TRAFFIC PLANS ARE BASED ON THE FOLLOWING SUGGESTED SEQUENCE OF CONSTRUCTION:

THE INTENT OF THIS PROJECT IS TO REHABILITATE AND REDECK THE OHIO TURNPIKE (I-80) BRIDGE OVER STATE ROUTE 99 BOTH WESTBOUND AND EASTBOUND AT MILE POST 111.2 WHILE MAINTAINING TWO (2) LANES OF TRAFFIC IN EACH DIRECTION AT ALL TIMES. WESTBOUND AND EASTBOUND TURNPIKE BRIDGE WORK WILL REQUIRE SEVERAL PHASES AS DETAILED ON THE MAINTENANCE OF TRAFFIC PLAN SHEETS.

3

WESTBOUND AND EASTBOUND CONSTRUCTION, FROM STA. 267+25.00 TO STA. 273+00.00, INCLUDING FINAL RESURFACING, PAVEMENT MARKING, RAISED PAVEMENT MARKING, SNAPS AND SIGNING WORK SHALL BE COMPLETED DURING A SINGLE CONSTRUCTION SEASON FROM APRIL 1, 2024 TO OCTOBER 12, 2024. ALL WORK REQUIRED TO RESTORE THE OHIO TURNPIKE TRAFFIC PATTERNS TO THEIR ORIGINAL CONDITION AS WELL AS OPENING STATE ROUTE 99 SHALL BE COMPLETED DURING THE SINGLE CONSTRUCTION SEASON. REFER TO SP103 FOR ADDITIONAL INFORMATION.

PRE PHASE 1
THIS WORK WILL CONSIST OF REMOVING THE SONIC NAP ALERT PATTERN (SNAP) FROM THE OUTSIDE SHOULDERS TO BE USED TO MAINTAIN TRAFFIC DURING PHASES 2 AND 3 AND INSTALLATION OF CROSSOVER LIGHTING. THE SHOULDER WORK WILL CONSIST OF RESURFACING THE SNAP AS DETAILED ON MAINTENANCE OF TRAFFIC TYPICAL SECTIONS.

TWO LANES OF TRAFFIC IN EACH DIRECTION WILL BE MAINTAINED USING RIGHT LANE CLOSURES AS DETAILED ON OTIC STANDARD DRAWING TCR-2.

PHASE 1
THIS PHASE WILL CONSIST OF CONSTRUCTING THE CROSSOVERS TO BE USED TO MAINTAIN TRAFFIC DURING PHASES 2 AND 3. THE CROSSOVER CONSTRUCTION WILL CONSIST OF REMOVING PORTIONS OF THE EXISTING APPROACH ROADWAY MEDIAN BARRIER,CONSTRUCTING TEMPORARY DRAINAGE AND MEDIAN RESURFACING.

TWO LANES OF TRAFFIC IN EACH DIRECTION WILL BE MAINTAINED USING LEFT LANE CLOSURES AS DETAILED ON THE MAINTENANCE OF TRAFFIC PLAN SHEETS.

PHASE 2
THIS PHASE WILL CONSIST OF THE REHABILITATION AND REDECKING OF THE WESTBOUND BRIDGE SUPERSTRUCTURE, WESTBOUND ABUTMENT SLABS, APPROACH SLABS AND ALL ASSOCIATED WORK FOR THE WESTBOUND BRIDGE. THE CONTRACTOR MAY ALSO ELECT TO PERFORM ALL OR A PORTION OF THE WESTBOUND APPROACH LANES AND OUTSIDE SHOULDER RESURFACING, EXCEPT FOR THE SURFACE COURSE.

ASPHALT CONCRETE FOR MAINTAINING TRAFFIC SHALL BE PLACED TO PROVIDE SMOOTH PROFILE TRANSITIONS ALONG THE PORTIONS OF THE WESTBOUND LANES CARRYING TRAFFIC IN SUBSEQUENT PHASES TO THE SATISFACTION OF THE ENGINEER. IN THE EVENT THAT THE CONTRACTOR ELECTS TO RESURFACE THE WESTBOUND APPROACH LANES AND OUTSIDE SHOULDER IN PHASE 2, ASPHALT CONCRETE FOR MAINTAINING TRAFFIC ON THE PORTIONS OF THE WESTBOUND MEDIAN CARRYING TRAFFIC DURING PHASE 3 SHALL BE PLACED SUCH THAT RESULTING GRADE BREAKS NOT EXCEED 5 PERCENT AND TO THE SATISFACTION OF THE ENGINEER.

TWO LANES OF TRAFFIC IN EACH DIRECTION WILL BE MAINTAINED ON THE OHIO TURNPIKE USING CROSSOVERS AS DETAILED ON THE MAINTENANCE OF TRAFFIC SHEETS.

3

STATE ROUTE 99 BENEATH THE OHIO TURNPIKE SHALL BE CLOSED TO THRU TRAFFIC AND DETOURED ACCORDING TO THE PLANS AS SHOWN ON SHEET 11. THE CONTRACTOR SHALL MAINTAIN ACCESS TO ALL DRIVES AT ALL TIMES DURING THE PROJECT UNLESS OTHERWISE AUTHORIZED BY THE CHIEF ENGINEER. DETOURS SHALL NOT BE PLACED INTO EFFECT UNTIL THE CONTRACTOR IS READY TO COMMENCE WORK BENEATH THE OHIO TURNPIKE THAT WILL IMPACT TRAFFIC ON STATE ROUTE 99 AND SHALL NOT REMAIN CLOSED LONGER THAN 180 DAYS TOTAL, INCLUDING BOTH PHASES 2 AND 3.

PHASE 3
THIS PHASE WILL CONSIST OF THE REHABILITATION AND REDECKING OF THE EASTBOUND BRIDGE SUPERSTRUCTURE, EASTBOUND ABUTMENT SLABS, APPROACH SLABS AND ALL ASSOCIATED WORK FOR THE EASTBOUND BRIDGE. THE CONTRACTOR MAY ALSO ELECT TO PERFORM ALL OR A PORTION OF THE EASTBOUND APPROACH LANES AND OUTSIDE SHOULDER RESURFACING.

IF REQUIRED BY THE CONTRACTOR'S OPERATIONS, ASPHALT CONCRETE FOR MAINTAINING TRAFFIC SHALL BE PLACED TO PROVIDE SMOOTH PROFILE TRANSITIONS ALONG THE PORTIONS OF THE EASTBOUND LANES CARRYING TRAFFIC IN PHASE 4 TO THE SATISFACTION OF THE ENGINEER.

TWO LANES OF TRAFFIC IN EACH DIRECTION WILL BE MAINTAINED USING CROSSOVERS AS DETAILED ON THE MAINTENANCE OF TRAFFIC PLAN SHEETS.

3

STATE ROUTE 99 BENEATH THE OHIO TURNPIKE SHALL REMAIN CLOSED TO THRU TRAFFIC AND DETOURED ACCORDING TO THE PLANS AS SHOWN ON SHEET 11. STATE ROUTE 99 WILL BE OPENED AND THE DETOUR REMOVED.

PHASE 4
THIS PHASE WILL CONSIST OF REMOVING CROSSOVER LIGHTING AND RESTORING THAT PORTION OF THE MEDIAN USED FOR THE PHASES 2 AND 3 CROSSOVERS AND APPROACH MEDIAN RECONSTRUCTION WITHIN THE WORK AREA. THE MEDIAN WORK WILL CONSIST OF REMOVING THE TEMPORARY DRAINAGE, CONSTRUCTING CONCRETE MEDIAN BARRIER, BARRIER REFLECTORS, INLETS AND SONIC NAP ALERT PATTERNS (SNAPS), AND RESURFACING.

TWO LANES OF TRAFFIC IN EACH DIRECTION WILL BE MAINTAINED USING LEFT LANE CLOSURES AS DETAILED ON THE MAINTENANCE OF TRAFFIC PLAN SHEETS AND OTIC STANDARD DRAWING TCR-2.

3

APPROACH PAVEMENT RESURFACING, PERMANENT PAVEMENT MARKINGS AND SONIC NAP ALERT PATTERN (SNAP)
THE CONTRACTOR SHALL PERFORM THE REMAINDER OF THE APPROACH ROADWAY RESURFACING AND PLACE THE PERMANENT PAVEMENT MARKINGS, INCLUDING RAISED PAVEMENT MARKERS (RPM) IN ACCORDANCE WITH OTIC STANDARD DRAWINGS. THE RPM SHALL BE PLACED WITHIN THE ROADWAY RESURFACING LIMITS. PAVEMENT MARKING SHALL BE PERFORMED BETWEEN STATION 237+15 AND STATION 303+15, AND THE SNAP WILL BE PERFORMED WITHIN THE OUTSIDE SHOULDER RESTORATION LIMITS ON BOTH THE EASTBOUND AND WESTBOUND SIDES OF THE TURNPIKE. THE LAYOUT OF THE PAVEMENT MARKINGS AND RPM SHALL BE PER OTIC STANDARD DRAWING RPM-1. SONIC NAP ALERT PATTERNS SHALL BE IN ACCORDANCE WITH OTIC STANDARD CONSTRUCTION DRAWING TCR-13. IF THE CONTRACTOR ELECTS TO PLACE THE EASTBOUND SURFACE COURSE IN PHASE 3, THE CONTRACTOR MAY PLACE PERMANENT PAVEMENT MARKINGS WITHIN THE WORK AREA INSTEAD OF PLACING WORK ZONE PAVEMENT MARKINGS, WHICH WILL BE NON-PERFORMED IN THIS AREA.

INTERIM MAINTENANCE OF TRAFFIC PHASES AND OPERATIONS
THE DETAILED MAINTENANCE OF TRAFFIC PLANS PRESENTED ON THE FOLLOWING SHEETS REFLECT MAJOR PHASES OF CONSTRUCTION REQUIRED TO COMPLETE THE PROJECT. QUANTITIES FOR ITEMS PAID SEPARATELY FOR THESE MAJOR PHASES ARE INCLUDED IN THE PLANS.

THE CONTRACTOR WILL BE REQUIRED TO PERFORM WORK IN ORDER TO ESTABLISH OR TRANSITION INTO THESE MAJOR PHASES. THIS WORK SHALL BE CONSIDERED INTERIM MAINTENANCE OF TRAFFIC PHASES. THE CONTRACTOR SHALL BE RESPONSIBLE FOR ALL LABOR, MATERIALS, EQUIPMENT AND TRAFFIC CONTROL DEVICES (INCLUDING WORK ZONE IMPACT ATTENUATORS) REQUIRED TO ESTABLISH AND REMOVE THE MAJOR PHASES OF CONSTRUCTION.

PAYMENT FOR THE WORK DESCRIBED ABOVE FOR THE INTERIM MAINTENANCE OF TRAFFIC PHASES SHALL BE INCLUDED IN THE LUMP SUM UNIT PRICE FOR ITEM SP 614, MAINTAINING TRAFFIC AND SHALL INCLUDE ALL REQUIRED LABOR, EQUIPMENT, MATERIALS AND INCIDENTALS.

MAINTAINING TRAFFIC
GENERALLY, THE CONTRACTOR SHALL CONDUCT OPERATIONS AS TO COMPLETE THE PROPOSED IMPROVEMENT WITH A MINIMUM OF HAZARD, DELAY AND INCONVENIENCE TO THE MOTORISTS USING THE HIGHWAY AFFECTED BY THE WORK DONE UNDER THIS CONTRACT.

THE CONTRACTORS RESPONSIBILITY TO THE SAFETY OF THE MOTORING PUBLIC WHILE PERFORMING THE REQUIREMENTS OF THE CONTRACT SHALL BE IN ACCORDANCE WITH THESE TEMPORARY TRAFFIC CONTROL PLANS, THE SPECIFICATIONS AND SPECIAL PROVISIONS, THE CURRENT EDITION, LATEST REVISION OF THE "OHIO MANUAL OF UNIFORM TRAFFIC CONTROL DEVICES" (OMUTCD) AND "TEMPORARY TRAFFIC CONTROL ON THE TURNPIKE, "LATEST REVISION. IN ADDITION TO THE CONSTRUCTION AND MATERIAL SPECIFICATIONS, THE CONTRACTOR SHALL FURNISH, ERECT, MAINTAIN AND SUBSEQUENTLY REMOVE ALL TRAFFIC CONTROL DEVICES AS PER SP 614 MAINTAINING TRAFFIC, INCLUDING BARRICADES AND SIGNS IN ACCORDANCE WITH THE OHIO DEPARTMENT OF TRANSPORTATION (ODOT) STANDARD CONSTRUCTION DRAWINGS AND THE OMUTCD.

IN ADDITION, THE FOLLOWING SPECIFIC PROVISIONS ARE MANDATORY:

I. NOTIFICATION

SINCE FUNCTIONAL TRAFFIC CONTROL IS A CONCERN ON ANY PROJECT, IT IS ESSENTIAL THAT THE MOTORING PUBLIC BE ADEQUATELY FOREWARNED OF FUTURE LANE CLOSURES AND/OR TRAFFIC CONSTRICTIONS.

THE CONTRACTOR SHALL SUBMIT A WRITTEN SCHEDULE INDICATING THE LOCATIONS AND DATES OF THE LANE CLOSURES TO THE ENGINEER, OTIC MARKETING AND COMMUNICATIONS OFFICE AND THE FOLLOWING LOCAL AUTHORITIES AT LEAST TWENTY-ONE (21) DAYS PRIOR TO THE START OF CONSTRUCTION. THE CONTRACTOR MUST ALSO NOTIFY THEM AT LEAST SEVENTY-TWO (72) HOURS BEFORE IMPLEMENTING ANY SUBSTANTIAL CHANGE IN TRAFFIC PATTERNS.

AGENCY/ENTITY	PHONE	FAX
SANDUSKY REGISTER	419-625-5500	419-625-3007
WLEC (RADIO STATION)	419-626-0218	419-625-1348
CLEAR CHANNEL TRAFFIC		419-244-4926
MARGARETTA LOCAL SCHOOL		419-684-9003
BELLEVUE SCHOOL TRANSPORTATION	419-484-5151	419-484-5152
BELLEVUE POST OFFICE	419-483-3910	
MARGARETTA TWP POLICE	419-684-5686	419-684-5601
GROTON TWP FIRE	419-483-7840	419-483-3384
GROTON TWP ROAD SUPERINTEND.	419-483-7840	419-483-3384
GROTON TWP TRUSTEES	419-483-7840	419-483-3384
EMERGENCY MANAGEMENT	419-627-7617	419-627-8108
ERIE COUNTY SHERIFF	419-627-7668	419-627-7547
STATE HIGHWAY PATROL	419-625-6565	419-625-0604
SANDUSKY COUNTY ENGINEER	419-334-9731	419-334-9733
ERIE COUNTY ENGINEER	419-627-7712	419-625-9622
ODOT DISTRICT 3	419-281-0513	
OHIO STATE HIGHWAY PATROL	419-625-6565	

II. LANE CLOSURE

ALL LANE CLOSURES SHALL BE IN ACCORDANCE WITH THE OMUTCD AND APPLICABLE STANDARD CONSTRUCTION DRAWING(S).

THE OHIO TURNPIKE AND INFRASTRUCTURE COMMISSION (OTIC) TEMPORARY TRAFFIC CONTROL PHASE DATES, LANE REDUCTION TIME LIMITATIONS, AND LIQUIDATED DAMAGE CLAUSES ARE CONTAINED IN THE FOLLOWING SPECIAL PROVISIONS:

SP 103, CONSTRUCTION PHASING AND TIME OF COMPLETION
SP 104, ACCESS TO TURNPIKE AND RESTRICTIONS
SP 107, TIME OF ESSENCE - LIQUIDATED DAMAGES

III. MAINTENANCE OF TRAFFIC SYSTEMS

A. WHEN REQUIRED

WHENEVER ANY PART OF THE TRAVELED SURFACE IS BEING WORKED UPON OR IS OTHERWISE NOT SUITABLE FOR SAFE AND CONVENIENT USE BY VEHICLES, TRAFFIC CONTROL DEVICES SUFFICIENT TO PROTECT SUCH AREAS TO ASSURE THE SAFE AND CONVENIENT PASSAGE OF VEHICULAR TRAFFIC SHALL BE INSTALLED AND MAINTAINED. SUCH TRAFFIC CONTROL DEVICES AND THE MANNER IN WHICH THEY ARE USED SHALL BE CONSISTENT WITH THESE PLANS AND THE OMUTCD. THE TRAFFIC CONTROL DEVICE SYSTEM SHALL CONSTITUTE THE MINIMUM PROVISIONS FOR TRAFFIC CONTROL FOR EACH PARTICULAR SITUATION. WHENEVER THE ENGINEER DEEMS IT NECESSARY ESPECIALLY WHERE A GRADE, CURVE, OR MERGE CONDITIONS EXISTS, HE/SHE MAY DIRECT THAT ADDITIONAL OR ALTERNATIVE DEVICES BE USED.

B. CONDITIONS

DURING ALL PARTS OF THIS PROJECT, FLAGGERS, SIGNING, BARRICADES, FLASHING ARROWS, ETC. SHALL BE LOCATED AS INDICATED IN THE OMUTCD OR AS SHOWN IN THE STANDARD CONSTRUCTION DRAWINGS. TWO-WAY TRAFFIC SHALL BE MAINTAINED AT ALL TIMES.

C. ADVANCE WARNING SIGNS

ALL ADVANCE WARNING SIGNS FOR ANY CONDITION WHICH RESTRICTS TRAFFIC SHALL BE ERECTED BEFORE ANY SUCH RESTRICTION IS PUT INTO EFFECT. ALL SUCH SIGNS SHALL BE COVERED OR REMOVED FROM THE VIEW OF TRAFFIC WHENEVER THEY ARE NOT APPLICABLE.

D. FLASHING ARROW REQUIREMENT

WHENEVER ANY PART OF THE TRAVELED SURFACE IS CLOSED, THE MOTORISTS SHALL BE WARNED AND DIRECTED BY THE CONTRACTOR THROUGH THE USE OF ONE FLASHING ARROW FOR EACH LANE CLOSED. ADDITIONALLY, THE PROVISIONS SET FORTH IN THE OMUTCD AND THE APPLICABLE STANDARD CONSTRUCTION DRAWINGS SHALL BE MET.

E. FLAGGERS

THE CONTRACTOR SHALL FURNISH ADDITIONAL FLAGGERS AS DIRECTED BY THE ENGINEER.

F. MAINTENANCE OF TRAFFIC CONTROL ZONES

THE CONTRACTOR SHALL BE RESPONSIBLE TO MAINTAIN THE SIGNS, DRUMS AND TEMPORARY PAVEMENT MARKINGS AT THE LOCATIONS DETAILED IN THE PLANS OR SPECIFIED IN THE STANDARD DRAWINGS. THE CONTRACTOR SHALL IMMEDIATELY CORRECT ANY DEFICIENCY IN TRAFFIC ZONE ALIGNMENT, EQUIPMENT, NUMBER OF DEVICES OR PROCEDURE OF FLAG PERSONS WHICH IS BROUGHT TO THEIR ATTENTION BY THE ENGINEER.

G. FAILURE TO COMPLY

IF THERE IS ANY FAILURE TO COMPLY WITH PROVISIONS FOR TRAFFIC CONTROL SET OUT IN THESE PLANS AND NOTES, OR WITH THE PROVISIONS OF THE OMUTCD, THE HIGHWAY IN THE VICINITY OF THE WORK AREA SHALL NOT BE CONSIDERED IN A CONDITION FOR THE SAFE AND CONVENIENT USE BY THE TRAVELING PUBLIC. ANY FAILURE TO KEEP THE HIGHWAY IN THE VICINITY OF THE WORK AREA, IN A CONDITION FOR THE SAFE AND CONVENIENT USE BY THE TRAVELING PUBLIC SHALL BE CONSIDERED A BREACH OF THIS CONTRACT. WORK SHALL BE SUSPENDED UNTIL THE CONTRACTOR COMPLIES WITH THE PROVISIONS OF THE AFOREMENTIONED ITEMS.

IV. MAINTENANCE OF TRAFFIC MATERIALS

A. SIGNS

SIGN DIMENSIONS AND SPECIFICATIONS, INCLUDING LETTER SIZES SHALL BE AS PROVIDED IN THE OMUTCD, OR IN DESIGN DRAWINGS PROVIDED BY THE COMMISSION. THE SIGNS SHALL BE SUBJECT TO APPROVAL OF THE ENGINEER PRIOR TO THE START OF THE PROJECT.

B. REMOVAL OF PAVEMENT MARKINGS

ALL PAVEMENT MARKINGS WHICH ARE IN CONFLICT WITH THE PROPOSED MAINTENANCE OF TRAFFIC PAVEMENT MARKINGS ARE TO BE REMOVED AS PER SP 614C - REMOVAL OF PAVEMENT MARKING.

REMOVAL OF EXISTING CONFLICTING PAVEMENT MARKINGS SHALL BE ACCOMPLISHED BY EITHER GRINDING OR WATER BLAST AS APPROVED BY THE CHIEF ENGINEER, IN ACCORDANCE WITH SP 614C.

BLACKOUT TAPE CAN BE USED PER SP 614A AND CMS 614.

MEASUREMENT OF THIS ITEM SHALL BE IN ACCORDANCE WITH SP 614C AND SHALL INCLUDE ALL LABOR, MATERIALS, EQUIPMENT, AND INCIDENTALS NECESSARY TO REMOVE CONFLICTING PAVEMENT MARKINGS TO THE SATISFACTION OF THE CHIEF ENGINEER.

THE FOLLOW QUANTITY HAS BEEN CARRIED TO THE GENERAL SUMMARY TO BE UTILIZED AS DIRECTED BY THE CHIEF ENGINEER.

SP 614C - REMOVAL OF PAVEMENT MARKING.....11.20 MILE

C. GUARDRAIL DELINEATION

GUARDRAIL DELINEATION SHALL BE PER SP 626 EXCEPT THAT PAYMENT FOR GUARDRAIL DELINEATION SHALL BE INCLUDED WITH ITEM SP 614 MAINTAINING TRAFFIC. SUCH PAYMENT SHALL INCLUDE PROVIDING, INSTALLING, MAINTAINING, REPLACING DAMAGED DELINEATORS AND REMOVING, AS SPECIFIED, FOR THE ABOVE SAID GUARDRAIL DELINEATION.

D. PORTABLE BARRIERS

ALL PORTABLE BARRIERS SHOWN ON THE PLANS FOR MAINLINE TEMPORARY TRAFFIC CONTROL WILL BE AS PER ITEM SP 622, INCLUDING TYPE AND INSTALLATION OF GLARE SCREENS AND BARRIER DELINEATORS. SEE OTIC STANDARD DRAWINGS TCR-4, TCR-7 AND TCR-14 FOR ADDITIONAL BARRIER DELINEATOR DETAILS AND PLACEMENT REQUIREMENTS. THE SAME BARRIER CAN BE USED FOR THE VARIOUS PHASES. THE COST FOR TRANSPORTING, INSTALLING, MAINTAINING, REMOVING, STORING AND RE-SETTING THE PORTABLE BARRIER FOR EACH PHASE SHALL BE INCLUDED IN THE ORIGINAL UNIT COST OF SUPPLYING THE BARRIER FOR ITEM SP 622.

ALL COSTS ASSOCIATED BARRIER DELINEATORS AND GLARE SCREENS, INCLUDING TRANSPORTING, INSTALLING, MAINTAINING, REMOVING, STORING AND RE-SETTING THROUGHOUT THE CONTRACT SHALL ALSO BE INCLUDED IN THE ORIGINAL UNIT COST OF SUPPLYING THE BARRIER FOR ITEM SP 622.

THE CONTRACTOR SHALL REPLACE ANY DAMAGED PORTABLE BARRIER WITHIN 24 HOURS OF A DAMAGING IMPACT.

DESIGN AGENCY
Michael Baker INTERNATIONAL
MICHAEL BAKER INTL.
11 GANSER WAY
EAST SUITE 2300
CARNEGIE, PA 15106
O 2-56-964-4814
F 216-664-6503

NO.	REVISIONS	BY	DATE
-	-	-	-
-	-	-	-
-	-	-	-
-	-	-	-

DESIGNED	CHECKED
LJS	KGJ
DRAWN	IN CHARGE
PS	CDC

MAINTENANCE OF TRAFFIC GENERAL NOTES

ERIE COUNTY

M.P. 111.2 & M.P. 119.3

PROJECT 43-24-06

DATE: 03/07/23

OHIO TURNPIKE AND INFRASTRUCTURE COMMISSION

71-21-07_SR099_MOT NOTES 1.dwg; 8/08/23 - 11:20am

TEMPORARY TRAFFIC CONTROL NOTES - M.P. 111.2 (CONTINUED)

ITEM 614, WORK ZONE IMPACT ATTENUATOR FOR 24" WIDE HAZARDS (UNIDIRECTIONAL OR BIDIRECTIONAL)
THIS ITEM SHALL CONSIST OF FURNISHING AND INSTALLING A NON-GATING IMPACT ATTENUATOR. FURNISH AN IMPACT ATTENUATOR FROM THE OFFICE OF ROADWAY ENGINEERING'S APPROVED LIST FOR WORK ZONE IMPACT ATTENUATORS ON THE ROADWAY STANDARDS WEB PAGE.

INSTALLATION SHALL BE AT THE LOCATIONS SPECIFIED IN THE PLANS IN ACCORDANCE WITH THE MANUFACTURER'S SPECIFICATIONS.

THE CONTRACTOR SHALL REPAIR OR REPLACE A DAMAGED UNIT WITHIN 24 HOURS OF A DAMAGING IMPACT.

WHEN BIDIRECTIONAL DESIGNS ARE SPECIFIED, THE CONTRACTOR SHALL SUPPLY APPROPRIATE TRANSITIONS.

WHEN GATING IMPACT ATTENUATORS ARE DESIRED, THE CONTRACTOR SHALL SUBMIT DOCUMENTATION TO THE ENGINEER FOR ACCEPTANCE.

THE COST FOR THE ADDITIONAL BARRIER REQUIRED FOR A GATING IMPACT ATTENUATOR SHALL BE INCLUDED IN THE COST OF THE GATING IMPACT ATTENUATOR.

PAYMENT FOR THE ABOVE WORK SHALL BE MADE AT THE UNIT PRICE BID AND SHALL INCLUDE ALL LABOR, TOOLS, EQUIPMENT AND MATERIALS NECESSARY TO CONSTRUCT AND MAINTAIN A COMPLETE AND FUNCTIONAL IMPACT ATTENUATOR SYSTEM, INCLUDING ALL RELATED BACKUPS, TRANSITIONS, LEVELING PADS, HARDWARE AND GRADING, NOT SEPARATELY SPECIFIED, AS REQUIRED BY THE MANUFACTURER.

ITEM 614 PORTABLE CHANGEABLE MESSAGE SIGN, AS PER PLAN
THE CONTRACTOR SHALL FURNISH, INSTALL, MAINTAIN AND REMOVE, WHEN NO LONGER NEEDED, TWO (2) PORTABLE CHANGEABLE MESSAGE SIGNS (PCMS). THE TWO (2) SIGNS SHALL BE LOCATED NEAR THE PROJECT SITE, ONE FOR EACH DIRECTION OF TRAVEL, FOR THE DURATION OF THE PROJECT. THE INTENT OF THE PCMS IS TO ALERT MOTORISTS OF TRAFFIC QUEUES OR INCIDENTS DURING MAINTENANCE OF TRAFFIC PHASES 1 THROUGH 4. PCMS SHOULD BE PUT IN PLACE APPROXIMATELY A WEEK BEFORE PHASE 1 IS ESTABLISHED AND REMOVED ONCE PHASE 4 IS DISCONTINUED. THE SIGNS SHALL BE OF A TYPE SHOWN ON A LIST OF APPROVED CLASS "A " PCMS UNITS MAINTAINED BY THE ODOT DIRECTOR (OFFICE OF MATERIALS MANAGEMENT). THE APPROVED LIST OF PORTABLE CHANGEABLE MESSAGE SIGNS CAN BE FOUND ON THE ODOT WEBSITE BY CLICKING ON THE SERVICES MENU, THEN CLICKING ON MATERIALS MANAGEMENT.

EACH SIGN SHALL BE TRAILER-MOUNTED AND EQUIPPED WITH A FUNCTIONAL DIMMING MECHANISM, TO DIM THE SIGN DURING DARKNESS, AND A TAMPER AND VANDAL PROOF ENCLOSURE. EACH SIGN SHALL BE PROVIDED WITH APPROPRIATE TRAINING AND OPERATION INSTRUCTIONS TO ENABLE ON-SITE PERSONNEL TO OPERATE AND TROUBLESHOOT THE UNIT. THE SIGN SHALL ALSO BE CAPABLE OF BEING POWERED BY AN ELECTRICAL SERVICE DROP FROM A LOCAL UTILITY COMPANY. PCMS SHALL BE DELINEATED ON A PERMANENT BASIS IN ACCORDANCE WITH ODOT CMS 614.03.

THE PCMS LOCATIONS, LIMITS FOR THOSE LOCATIONS AND ALL ACTIVATION OF PCMS BY THE CONTRACTOR SHALL BE AS DIRECTED BY THE CHIEF ENGINEER. THE PCMS SHALL BE LOCATED IN A HIGHLY VISIBLE POSITION YET PROTECTED FROM TRAFFIC. THE CONTRACTOR SHALL, AT THE DIRECTION OF THE CHIEF ENGINEER, RELOCATE THE PCMS TO IMPROVE VISIBILITY OR ACCOMMODATE CHANGED CONDITIONS. WHEN NOT IN USE, THE PCMS SHALL BE TURNED OFF. ADDITIONALLY, WHEN NOT IN USE FOR EXTENDED PERIODS OF TIME, THE PCMS SHALL BE TURNED, FACING AWAY FROM ALL TRAFFIC, AND SHALL DISPLAY ONE OR MORE TYPE G YELLOW RETROREFLECTIVE SHEETING SURFACES OF 9-INCH BY 15-INCH MINIMUM SIZE FACING TRAFFIC.

THE CHIEF ENGINEER SHALL BE PROVIDED ACCESS TO EACH SIGN UNIT AND SHALL BE PROVIDED WITH APPROPRIATE TRAINING AND OPERTATION INSTRUCTIONS TO ENABLE TURNPIKE MAINTENANCE PERSONNEL TO OPERATE AND TROUBLESHOOT THE UNIT, AND TO REVISE SIGN MESSAGES, IF NECESSARY.

ALL MESSAGES TO BE DISPLAYED ON THE SIGN WILL BE PROVIDED BY THE CHIEF ENGINEER. A LIST OF ALL REQUIRED PRE-PROGRAMMED MESSAGES WILL BE GIVEN TO THE CONTRACTOR AT THE PROJECT PRE-CONSTRUCTION CONFERENCE OR EMAILED TO THE CONTRACTOR. THE SIGN SHALL HAVE THE CAPABILITY TO STORE UP TO 99 MESSAGES. MESSAGE MEMORY OR PRE-PROGRAMMED DISPLAYS SHALL NOT BE LOST AS A RESULT OF POWER FAILURES TO THE ON-BOARD COMPUTER. THE SIGN LEGEND SHALL BE CAPABLE OF BEING CHANGED IN THE FIELD. THREE-LINE PRESENTATION FORMATS WITH UP TO SIX MESSAGE PHRASES SHALL BE SUPPORTED. PCMS FORMAT SHALL PERMIT THE COMPLETE MESSAGE FOR EACH PHASE TO BE READ AT LEAST TWICE.

THE PCMS SHALL CONTAIN AN ACCURATE CLOCK AND PROGRAMMING LOGIC WHICH WILL ALLOW THE SIGN TO BE ACTIVATED, DEACTIVATED OR MESSAGES CHANGED AUTOMATICALLY AT DIFFERENT TIME OF THE DAY FOR DIFFERENT DAYS OF THE WEEK.

THE PCMS SHALL CONTAIN A CELLULAR TELEPHONE DATA LINK WHICH WILL ALLOW REMOTE ACCESS BY THE OTIC COMMUNICATIONS CENTER THROUGH A WEB BROWSER OR PROVIDED SOFTWARE. REMOTE ACESS WILL ALLOW PCMS ACTIVATION, MESSAGE CHANGES, MESSAGE ADDITIONS, REVISIONS TO TIME OF DAY PROGRAMS, VERIFICATION OF CURRENT AND PROGRAMMED MESSAGES AND SHOW ITS CURRENT LOCATION ON A MAP. THE OTIC COMMUNICATIONS CENTER SHALL BE FURNISHED A USER NAME AND PASSWORD TO ACCESS THE PCMS THROUGH THE WEBSITE OR PROVIDED SOFTWARE.

ALL PCMS UNITS SHALL BE EQUIPPED WITH RADAR THAT ENABLES THE MESSAGE BOARD TO DISPLAY THE SPEED OF THE APPROACHING VEHICLES.

ONE-WEEK PRIOR TO THE PCMS BEING DEPLOYED, THE CONTRACTOR SHALL CONTACT THE OTIC COMMUNICATIONS CENTER WITH THE PCMS NUMBER AND LOCATION. AT THAT TIME THE OTIC COMMUNICATIONS WILL VERIFY COMMUNICATION WITH THE PCMS.

WHEN A PCMS IS REPLACED OR RELOCATED THE CONTRACTOR SHALL CONTACT THE OTIC COMMUNICATIONS CENTER WITH THE PCMS NUMBER AND LOCATION.

THE PCMS UNIT SHALL BE MAINTAINED IN GOOD WORKING ORDER BY THE CONTRACTOR IN ACCORDANCE WITH THE PROVISIONS OF ODOT CMS 614.07. THE CONTRACTOR SHALL, PRIOR TO ACTIVATING THE UNIT, MAKE ARRANGEMENTS WITH AN AUTHORIZED SERVICE AGENT FOR THE PCMS, TO ASSURE PROMPT SERVICE IN THE EVENT OF FAILURE. ANY FAILURE SHALL NOT RESULT IN THE SIGN BEING OUT OF SERVICE FOR MORE THAN 12 HOURS, INCLUDING WEEKENDS. FAILURE TO COMPLY MAY RESULT IN AN ORDER TO STOP WORK AND OPEN ALL TRAFFIC LANES AND/OR IN THE CHIEF ENGINEER TAKING APPROPRIATE ACTION TO SAFELY CONTROL TRAFFIC. THE ENTIRE COST TO CONTROL TRAFFIC, ACCURED BY THE OHIO TUNPIKE AND INFRASTRUCTURE COMMISSION DUE TO THE CONTRACTOR'S NONCOMPLIANCE, WILL BE DEDUCTED FROM MONEYS DUE, OR TO BECOME DUE THE CONTRACTOR ON THEIR CONTRACT.

THE CONTRACTOR SHALL BE RESPONSIBLE FOR 24-HOUR-PER-DAY OPERATION AND MAINTENANCE OF THESE SIGN ON THE PROJECT FOR THE DURATION OF THE PHASES WHEN THE PLAN REQUIRES THEIR USE.

PAYMENT FOR THE ABOVE-DESCRIBED ITEM SHALL BE AT THE CONTRACT UNIT PRICE. PAYMENT SHALL INCLUDE ALL LABOR, MATERIALS, EQUIPMENT, FUELS, LUBRICATING OILS, SOFTWARE, HARDWARE AND INCIDENTALS TO PERFORM THE ABOVE-DESCRIBED WORK. THE CONTRACTOR SHALL ONLY BE PAID FOR PCMS UNITS WHEN THEY ARE IN OPERATION ON THE PROJECT AS SPECIFIED IN THE PLANS OR BY THE CHIEF ENGINEER.

THE FOLLOWING ESTIMATED QUANTITY HAS BEEN INCLUDED IN THE GENERAL SUMMARY FOR USE AS DIRECTED BY THE CHIEF ENGINEER TO PROVIDE TWO (2) PORTABLE CHANGEABLE MESSAGE SIGNS, EACH SIGN FOR APPROXIMATELY 190 DAYS, FOR AN ESTIMATED TOTAL OF 380 DAYS.

ITEM 614, PORTABLE CHANGEABLE MESSAGE SIGN,
AS PER PLAN.....380 DAYS

ITEM SP 622 - PORTABLE BARRIER (WITH GLARE SCREEN)
ITEM SP 622 - PORTABLE BARRIER (WITHOUT GLARE SCREEN)
THE CONTRACTOR SHALL REPLACE ANY DAMAGED PORTABLE BARRIER WITH IN 24 HOURS OF A DAMAGING IMPACT. TO FACILITATE THIS PROMPT REPLACEMENT, AN ADDITIONAL THREE HUNDRED FEET OF EACH TYPE OF BARRIER SHALL BE ON THE PROJECT AT ALL TIMES. THE FOLLOWING CONTINGENCY QUANTITIES HAVE BEEN SHOWN FOR INFORMATIONAL PURPOSES ONLY. A LUMP SUM QUANTITY HAS BEEN CARRIED TO THE GENERAL SUMMARY FOR USE AS DIRECTED BY THE CHIEF ENGINEER FOR REPLACEMENT OF PORTABLE BARRIER.

ITEM SP 622 - PORTABLE BARRIER, 32"
(WITH GLARE SCREEN).....300 FEET
ITEM SP 622 - PORTABLE BARRIER, 32"
(WITHOUT GLARE SCREEN).....300 FEET

SP 614ZP - ZONE PERSON WITH ZONE VEHICLE

THIS ITEM SHALL CONSIST OF SUPPLYING A ZONE PERSON WITH ZONE VEHICLE PER SP 614ZP. PAYMENT FOR THIS ITEM SHALL INCLUDE ALL LABOR, EQUIPMENT, AND MATERIAL AND INCIDENTALS NECESSARY TO PROVIDE A ZONE PERSON WITH ZONE VEHICLE.

THE FOLLOWING QUANTITY HAS BEEN CARRIED TO THE GENERAL SUMMARY:

ITEM SP 614ZP - ZONE PERSON
WITH ZONE VEHICLE .....4,400 HOURS

3

PAVEMENT REPAIRS
THE FOLLOWING QUANTITIES ARE INCLUDED AS A CONTINGENCY TO BE USED AS DIRECTED BY THE CHIEF ENGINEER FOR PAVEMENT REPAIR MEASURES TO MAINTAIN TRAFFIC. CONTRACTOR SHALL FOLLOW ODOT CMS FOR ITEM 255, EXCEPT THAT PLACEMENT OF THE DOWEL BARS ARE NOT REQUIRED FOR SHORT TERM REPAIRS, CONCRETE SHALL BE CLASS QC 1 FOR AREAS WHERE TRAFFIC CAN BE DIVERTED FOR 7 DAYS, AREAS THAT HAS TO BE OPENED TO TRAFFIC IN A TIMELY MANNER CONCRETE SHALL BE IN ACCORDANCE WITH ODOT 255.02, AND MAINTENANCE OF TRAFFIC COSTS INCURRED BY THE CONTRACTOR FOR THESE CURRENTLY UNKNOWN AND UNDEFINED PAVEMENT REPAIRS WILL BE COMPENSATED ON A TIME AND MATERIALS BASIS AS APPROVED BY THE CHIEF ENGINEER. FULL DEPTH REPLACEMENT AREAS SHALL MATCH THE EXISTING SECTION WITH SP 404 ASPHALT CONCRETE SURFACE COURSE, USING CRUSHED SLAG, PG76-22 AND SP 304 AGGREGATE BASE, AS PER PLAN, AS DIRECTED BY THE ENGINEER AND SHALL BE INCLUDED IN THE PRICES BID FOR ITEM 255 FULL DEPTH PAVEMENT REMOVAL AND RIGID REPLACEMENT. DEPTH FOR PARTIAL REMOVAL WILL BE 5" (+/-) ASPHALT ON CONCRETE TO THE SURFACE OF THE CONCRETE BASE. REPLACEMENT MATERIALS ARE SPECIFIED IN 251.03 UNIT PRICES BID FOR THE ITEMS IMMEDIATELY BELOW SHALL NOT INCLUDE MAINTENANCE OF TRAFFIC COSTS.

ITEM 251 - PARTIAL DEPTH PAVEMENT REPAIR.....500 SQ. YD.
ITEM 255 - FULL DEPTH PAVEMENT REMOVAL AND RIGID REPLACEMENT.....500 SQ. YD.
ITEM 255 - FULL DEPTH PAVEMENT REMOVAL AND RIGID REPLACEMENT (USING RAPID REPAIR CONCRETE MIX MATERIAL).....500 SQ. YD.
ITEM 255 - FULL DEPTH PAVEMENT SAWING.....1500 FT.

CONTRACTOR STAGING AREA
TOLL PLAZA 110 INFIELD IS AVAILABLE FOR A CONTRACTOR STAGING AREA. IF A CONTRACTOR CHOOSES A STAGING AREA WITHIN THE TURNPIKE RIGHT OF WAY OTHER THAN WHAT IS INDICATED IN THE PLANS, IT MUST BE SUBMITTED TO THE CHIEF ENGINEER FOR APPROVAL PRIOR TO USE.

THE STAGING AREA SHALL BE MAINTAINED BY THE CONTRACTOR AND RESTORED TO ORIGINAL CONDITION TO THE APPROVAL OF THE CHIEF ENGINEER PRIOR TO COMPLETION OF ALL WORK.

3

ITEM SPECIAL - EXISTING CROSSOVER TO BE CLOSED / RE-OPENED
THIS ITEM SHALL CONSIST OF TEMPORARILY CLOSING AND RE-OPENING EXISTING MEDIAN CROSSOVERS IN ACCORDANCE WITH OTIC STANDARD DRAWING TCB-3. ALL SECTIONS OF CONCRETE PORTABLE BARRIER SHALL BE PROVIDED BY THE CONTRACTOR AND SHALL BE NCHRP-350 BARRIER WALL.

PAYMENT FOR ALL EQUIPMENT, MATERIALS, LABOR, AND INCIDENTALS NECESSARY TO CLOSE AND RE-OPEN THE MEDIAN BARRIER SHALL BE INCLUDED IN THE LUMP SUM BID PRICE FOR:

ITEM SPECIAL - EXISTING CROSSOVER TO BE CLOSED/RE-OPENED.

TEMPORARY TRAFFIC CONTROL NOTES - M.P. 119.3

MAINTENANCE OF TRAFFIC SEQUENCE

STATE ROUTE 13 OVER THE OHIO TURNPIKE SHALL BE CLOSED TO THRU TRAFFIC AND DETOURED ACCORDING TO THE PLANS AS SHOWN ON SHEET 51 / 88. THE CONTRACTOR SHALL MAINTAIN ACCESS TO ALL DRIVES AT ALL TIMES DURING THE PROJECT UNLESS OTHERWISE AUTHORIZED BY THE CHIEF ENGINEER. DETOURS SHALL NOT BE PLACED INTO EFFECT UNTIL THE CONTRACTOR IS READY TO COMMENCE WORK.

MAINTAINING TRAFFIC

GENERALLY, THE CONTRACTOR SHALL CONDUCT OPERATIONS AS TO COMPLETE THE PROPOSED IMPROVEMENT WITH A MINIMUM OF HAZARD, DELAY AND INCONVENIENCE TO THE MOTORISTS USING THE HIGHWAY AFFECTED BY THE WORK DONE UNDER THIS CONTRACT.

THE CONTRACTOR'S RESPONSIBILITY TO THE SAFETY OF THE MOTORING PUBLIC WHILE PERFORMING THE REQUIREMENTS OF THE CONTRACT SHALL BE IN ACCORDANCE WITH THE DETOUR PLANS, THE SPECIFICATIONS AND SPECIAL PROVISIONS, AND THE CURRENT EDITION, LATEST REVISION OF THE "OHIO MANUAL OF UNIFORM TRAFFIC CONTROL DEVICES" (OMUTCD). IN ADDITION TO THE CONSTRUCTION AND MATERIAL SPECIFICATIONS, THE FOLLOWING SPECIFIC PROVISIONS ARE MANDATORY.

THE CONTRACTOR SHALL FURNISH, ERECT, MAINTAIN AND SUBSEQUENTLY REMOVE ALL TRAFFIC CONTROL DEVICES AS PER SP 614 MAINTAINING TRAFFIC, AND THE DETOUR PLANS INCLUDING BARRICADES AND SIGNS IN ACCORDANCE WITH THE OHIO TURNPIKE AND INFRASTRUCTURE COMMISSION (OTIC) STANDARD DRAWINGS AND OHIO DEPARTMENT OF TRANSPORTATION (ODOT) STANDARD CONSTRUCTION DRAWINGS AND THE OMUTCD. DETOUR SIGNS AND SUPPORTS SHALL BE ERECTED AND MAINTAINED BY THE CONTRACTOR.

1. NOTIFICATION

IN ADDITION TO THE NOTIFICATION REQUIREMENTS OF SP 614, THE CONTRACTOR SHALL INCLUDE THE FOLLOWING LOCAL AUTHORITIES.

ODOT DISTRICT 3	(419) 281-0513
OHIO STATE HIGHWAY PATROL	(419) 499-4808
ERIE COUNTY ENGINEER'S OFFICE	(419) 617-7710
MILAN TOWNSHIP ADMINISTRATION	(419) 499-2354
MILAN POLICE DEPARTMENT	(419) 499-2001
MILAN FIRE DEPARTMENT	(419) 499-2111
EDISON LOCAL SCHOOLS	(419) 499-3000

2. WORK HOURS

NIGHT WORK, EXCEPT THAT WHICH CAUSES MINIMAL NOISE AND DISRUPTION TO LOCAL RESIDENTS AND AS APPROVED BY THE CHIEF ENGINEER, IS NOT PERMITTED DUE TO THE RESIDENTIAL NATURE OF THE SURROUNDING AREAS. EXCEPT AS OTHERWISE INDICATED, LIMIT WORK HOURS TO DAYLIGHT HOURS BETWEEN 7:00 AM AND 9:00 PM.

3. LANE CLOSURE

ALL LANE CLOSURES SHALL BE IN ACCORDANCE WITH SP 614, THE OMUTCD AND APPLICABLE OTIC/ODOT STANDARD DRAWING(S).

OTIC TEMPORARY TRAFFIC CONTROL PHASE DATES, LANE REDUCTION TIME LIMITATIONS, AND LIQUIDATED DAMAGE CLAUSES ARE CONTAINED IN THE FOLLOWING SPECIAL PROVISIONS:

SP 103, CONSTRUCTION PHASING AND TIME OF COMPLETION
SP 104, ACCESS TO TURNPIKE AND RESTRICTIONS
SP 107, TIME OF ESSENCE - LIQUIDATED DAMAGES

DESIGN AGENCY
Michael Baker INTERNATIONAL
MICHAEL BAKER INTL.
17 BATTERY PARK AVE.
EAST SUITE 2500
NEW YORK, NY 10004
O.216.664.4414
F.216.664.4032

NO.	REVISIONS	BY	DATE
-	-	-	-
-	-	-	-
-	-	-	-
-	-	-	-

DESIGNED	CHECKED
LJS	KGJ
DRAWN	IN CHARGE
PS	CDC

MAINTENANCE OF TRAFFIC GENERAL NOTES
M.P. 111.2 & M.P. 119.3
ERIE COUNTY

PROJECT 43-24-06
DATE: 03/07/23

OHIO TURNPIKE AND INFRASTRUCTURE COMMISSION

OHIO TURNPIKE

71-21-07_SR099_MOT NOTES 3.dwg; 8/07/23 - 3:19pm

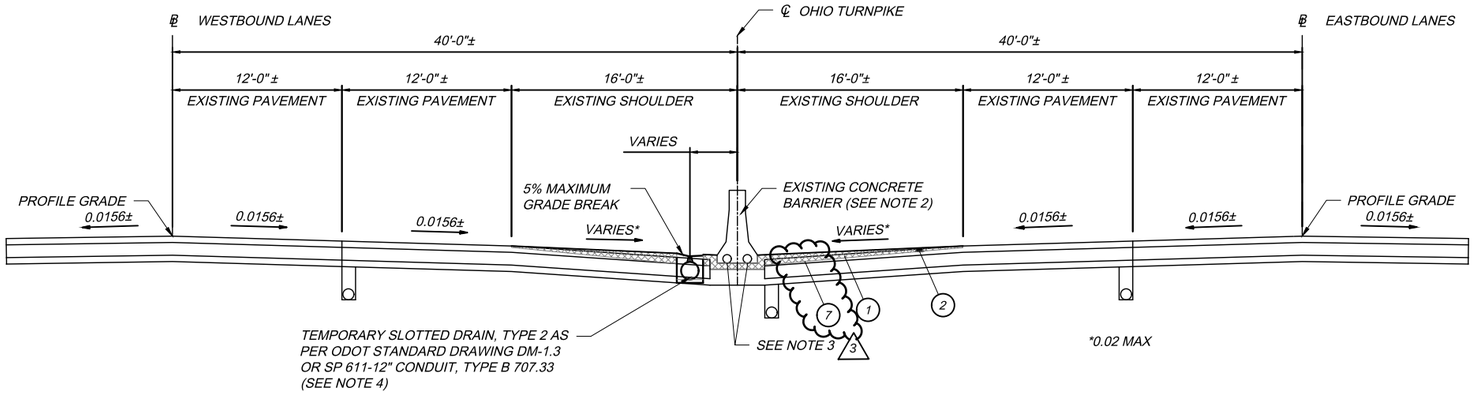

MEDIAN TEMPORARY PAVEMENT AND DRAINAGE SECTION - PHASE 1

STATION 260+10 TO STATION 265+65
STATION 273+50 TO STATION 279+00
(SEE NOTE 2 FOR EXISTING MEDIAN BARRIER REMOVAL LIMITS)

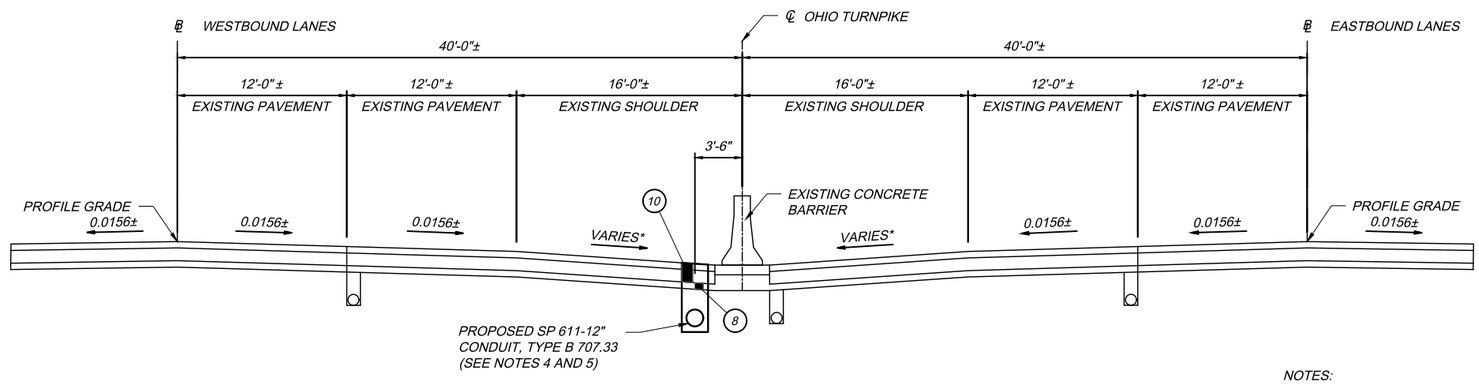

MEDIAN CONDUIT SECTION - PHASE 1

STATION 257+75 TO STATION 260+10
STATION 279+00 TO STATION 280+00

LEGEND

= TEMPORARY PAVEMENT MINIMUM 1-1/2 THICKNESS

1. SP 404 - ASPHALT CONCRETE SURFACE COURSE, USING CRUSHED STONE, PG64-22. (1-1/2" MINIMUM)
2. ITEM 254 - PAVEMENT PLANING, ASPHALT CONCRETE (VARIABLE DEPTH)
3. NOT USED
4. ITEM 622 - CONCRETE BARRIER TYPE B-50, AS PER PLAN
5. SP 404A - JOINT SEALER (APPLIED TO VERTICAL FACE)
6. SPECIAL - SAWCUT JOINT
7. ITEM 407 - NON-TRACKING TACK COAT
8. SP 304 - AGGREGATE BASE, AS PER PLAN (6")
9. SP 304 - GRANULAR EMBANKMENT (VARIABLE DEPTH)
10. SP 302 - BITUMINOUS AGGREGATE BASE, PG64-22 (15")
11. ITEM SPECIAL - SONIC NAP ALERT PATTERN

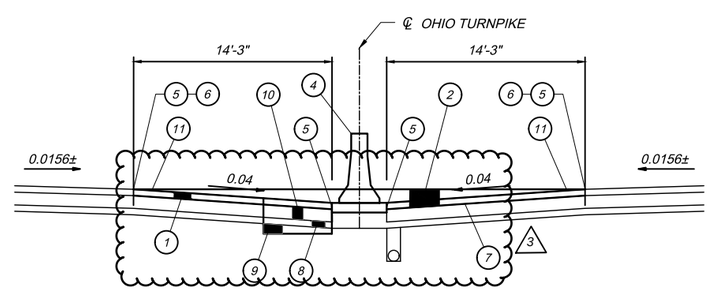

MEDIAN RESTORATION TYPICAL SECTION - PHASE 4

STATION 259+55 TO STATION 267+25
STATION 273+00 TO STATION 279+60
(SEE NOTE 4 FOR FULL DEPTH PAVEMENT REQUIREMENTS)
(SEE NOTE 6 FOR PHASE 4 MEDIAN BARRIER REPLACEMENT LIMITS)

NOTES:

1. THE CONTRACTOR SHALL REMOVE THE EXISTING SURFACE COURSE OF ASPHALT WITHIN THE LIMITS OF THE TEMPORARY PAVEMENT IN ORDER TO PROVIDE THE MINIMUM 1-1/2" PAVEMENT THICKNESS. COST OF REMOVAL, TACK COAT AND PLACEMENT OF VARIABLE DEPTH TEMPORARY PAVEMENT TO BE INCLUDED IN THE LUMP SUM BID FOR ITEM SP 614, MAINTAINING TRAFFIC.
2. CONTRACTOR SHALL REMOVE ENTIRE EXISTING PERMANENT MEDIAN BARRIER DURING PHASE 1 DEMOLITION OPERATIONS STATION 260+05 TO STATION 265+65 AND FROM STATION 273+50 TO STATION 279+10 MEDIAN BARRIER FOUNDATION MAY REMAIN DURING CONSTRUCTION AND BE REPLACED DURING THE PHASE 4 CROSSOVER RESTORATION.
3. THE CONTRACTOR SHALL TERMINATE THE MULTICELL CONDUIT BY PERMANENT CAPPING. THE CONTRACTOR SHALL NOT REPLACE THE MULTICELL CONDUIT. LABOR, EQUIPMENT, AND MATERIALS FOR THE ABOVE DESCRIBED WORK SHALL BE INCLUDED IN THE LUMP SUM BID FOR ITEM SP 614, MAINTAINING TRAFFIC.
4. SEE SHEETS 50 -53 FOR PHASE 1 CONDUIT LIMITS. PLACE FULL DEPTH PAVEMENT IN AREAS WHERE TEMPORARY DRAINAGE FEATURES ARE REMOVED DURING PHASE 4.
5. 12" TYPE B CONDUIT PLACED IN PHASE 1 PER SP 611 TO REMAIN.
6. CONTRACTOR SHALL CONSTRUCT ITEM 622 - CONCRETE BARRIER TYPE B-50, AS PER PLAN FROM STATION 260+05 TO STATION 265+65 AND FROM STATION 273+50 TO STATION 279+10 DURING PHASE 4.
7. ALL COSTS ASSOCIATED WITH THE MEDIAN RESTORATION INCLUDING, BUT NOT LIMITED TO, THE REMOVAL OF THE TEMPORARY PAVEMENT. REMOVAL OF ALL THE TEMPORARY DRAINAGE ITEMS, MEDIAN BARRIER REPLACEMENT, PAVEMENT REPLACEMENT, FILLING AND PLUGGING CONDUIT, AND PERMANENT DRAINAGE ITEMS, UNLESS ITEMIZED SEPARATELY, SHALL BE INCLUDED IN THE LUMP SUM BID FOR ITEM SP 614, MAINTAINING TRAFFIC.

DESIGN AGENCY
Michael Baker INTERNATIONAL
MICHAEL BAKER INTL
111 WILBRAHAM AVE
EAST SUITE 2300,
CLIFTON PARK, NY 12065
O:716-664-4414
F:716-664-6032

NO.	REVISIONS	BY	DATE
-	-	-	-
-	-	-	-
-	-	-	-

DESIGNED	CHECKED	DESIGN AGENCY
PS	KGJ	Michael Baker INTERNATIONAL
DRAWN	IN CHARGE	
PS	CDC	

MAINTENANCE OF TRAFFIC TYPICAL SECTIONS
OHIO TURNPIKE OVER STATE ROUTE 99
ERIE COUNTY
M.P. 111.2

PROJECT 43-24-06
DATE: 03/07/23

OHIO TURNPIKE AND INFRASTRUCTURE COMMISSION

71-21-07_SR099_MOT TYPICALS 1.dwg; 8/01/23 - 10:28pm

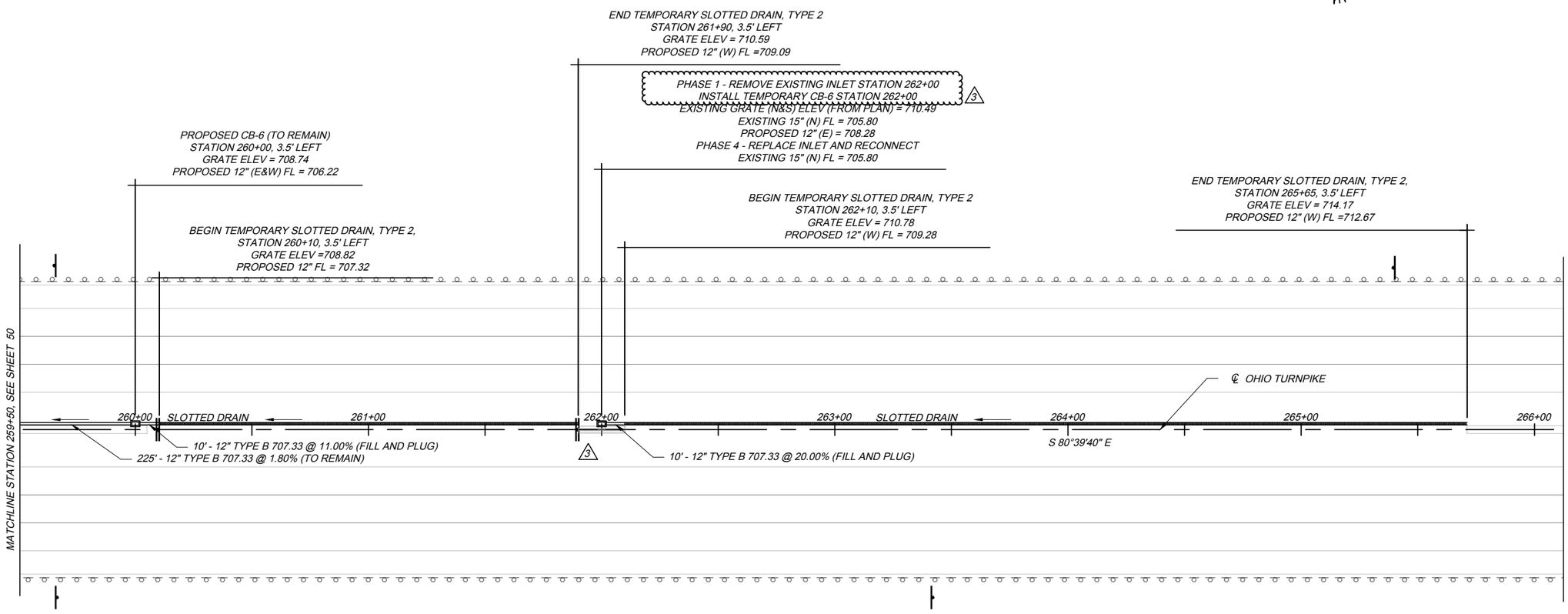

NOTES:

1. SEE SHEET 50 FOR NOTES.

71-21-07_MOT_TempDrainage.dwg: 8/03/23 - 3:07pm

DESIGN AGENCY
MICHAEL BAKER INTL
17177 BENJAMIN RD.
EAST SUITE 200
CLEVELAND, OHIO 44114
O:216-644-6483
F:216-464-6032
Michael Baker INTERNATIONAL

NO.	REVISIONS	BY	DATE
-	-	-	-
-	-	-	-
-	-	-	-
-	-	-	-

DESIGNED	CHECKED
KGJ	KMD
DRAWN	IN CHARGE
KGJ	CDC

MOT TEMPORARY DRAINAGE DETAILS
OHIO TURNPIKE OVER STATE ROUTE 99
ERIE COUNTY
M.P. 111.2

PROJECT 43-24-06
DATE: 03/07/23

OHIO TURNPIKE AND INFRASTRUCTURE COMMISSION

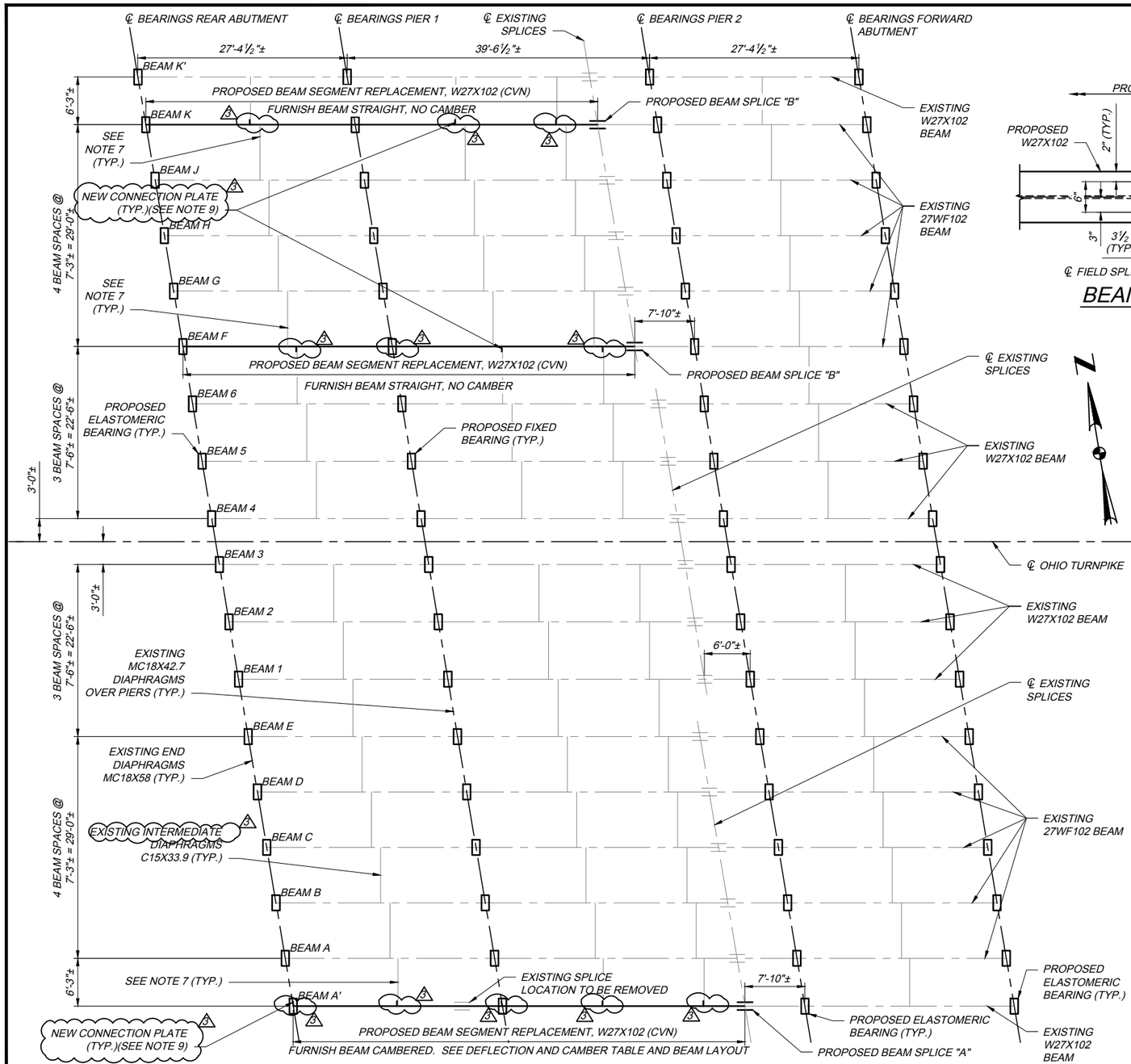

FRAMING PLAN

△3 - ADDENDUM

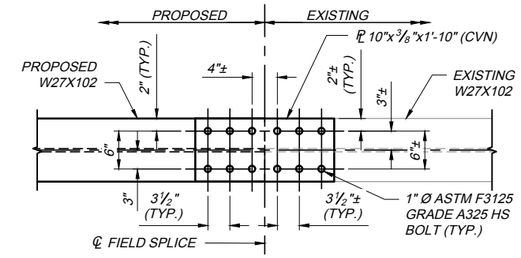

BEAM SPLICE "A" PLAN

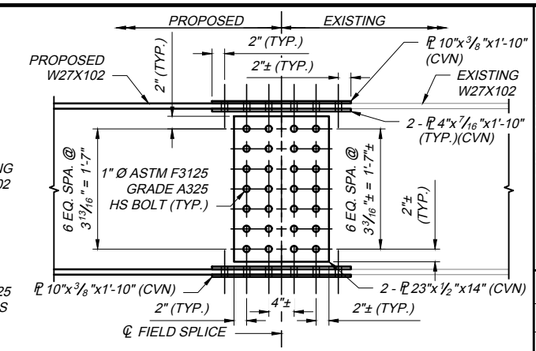

BEAM SPLICE "A" ELEVATION

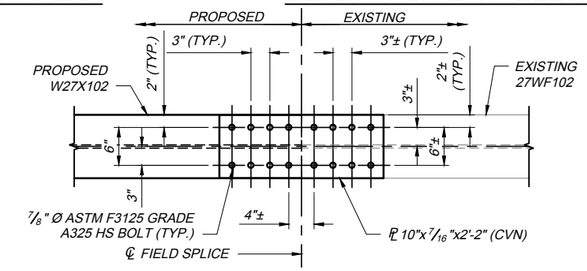

BEAM SPLICE "B" PLAN

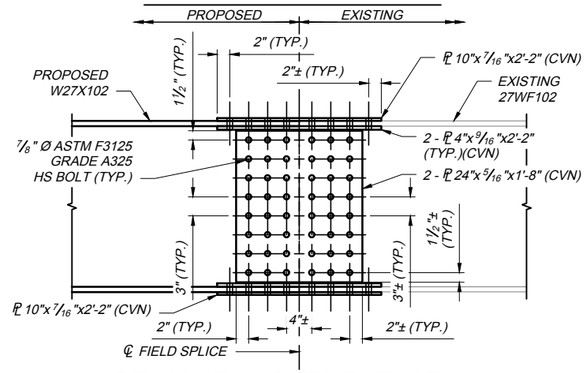

BEAM SPLICE "B" ELEVATION

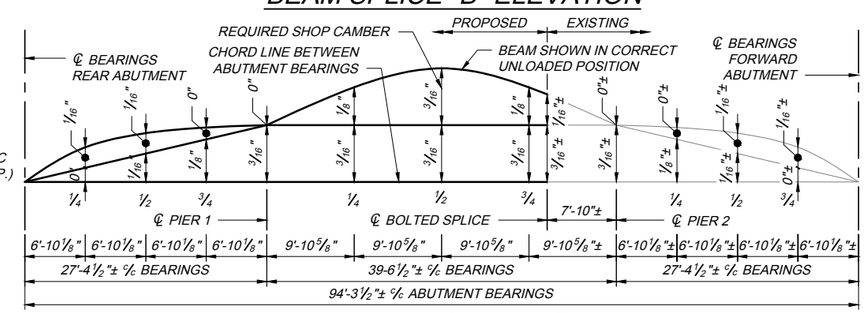

BEAM A' LAYOUT DIAGRAM

DEFLECTION AND CAMBER - BEAM A'

SPAN POINT	END SPAN			MIDDLE SPAN		
	¼ POINT	MIDPOINT	¾ POINT	¼ POINT	MIDPOINT	SPLICE
DEFLECTION DUE TO WEIGHT OF STEEL	0	0	0	0	0	0
DEFLECTION DUE TO REMAINING DEAD LOAD	1/16"	1/16"	0	1/8"	3/16"	1/16"
ADJUSTMENT REQUIRED FOR VERTICAL CURVE	0	0	0	0	0	0
REQUIRED SHOP CAMBER	1/16"	1/16"	0	1/8"	3/16"	1/16"

NOTES

1. ALL SPLICE MATERIAL SHALL CONFORM TO ASTM A709 GRADE 50.
2. ALL BOLTS SHALL CONFORM TO ASTM F3125 GRADE A325 AND BE OF THE DIAMETER(S) INDICATED.
3. PROPOSED AND REAMED EXISTING HOLES FOR 7/8" Ø BOLTS SHALL BE 15/16". PROPOSED AND REAMED EXISTING HOLES FOR 1" Ø BOLTS SHALL BE 1 1/16". THREADS SHALL BE EXCLUDED FROM THE SHEAR PLANE.
4. GAP BETWEEN BEAM ENDS IS NOT TO EXCEED ¼".
5. CONTRACTOR IS TO FIELD VERIFY BOLT HOLE LOCATIONS ON THE EXISTING BEAM PRIOR TO DRILLING BOLT HOLES ON THE EXISTING HALF OF THE PROPOSED SPLICE, TO ENSURE PROPER FIT UP.
6. CVN: WHERE A SHAPE OR PLATE IS DESIGNATED (CVN), FURNISH MATERIAL THAT MEETS THE MINIMUM NOTCH TOUGHNESS REQUIREMENTS AS SPECIFIED IN 711.01.
7. CONTRACTOR TO REMOVE AND REINSTALL △3 DIAPHRAGMS (AS NEEDED) TO FACILITATE BEAM REPLACEMENT. INCLUDE WITH ITEM 513 FOR PAYMENT.
8. FIELD BLAST AND PRIME EXISTING BEAM AND DIAPHRAGM FAYING SURFACES, THEN REASSEMBLE AND FULLY TIGHTEN BOLTS AS PER ITEM 513. AFTER BOLTING IS COMPLETE, FIELD APPLY INTERMEDIATE AND FINISH COATS PER SP 514A. INCLUDE WITH ITEM SPECIAL - REPAIR OF EXISTING PAINTED SURFACES, AS PER PLAN FOR PAYMENT.
9. SEE SHEET 9A / 15 FOR ADDITIONAL DETAILS.

DESIGN AGENCY
Michael Baker INTERNATIONAL
MICHAEL BAKER INTL. 4401 EMPEROR BLVD. EAST, SUITE 200, CHARLOTTE, NC 28273 P:704.665.1000 F:704.665.1414
C:216-644-6483 F:216-664-6032

NO.	REVISIONS	BY	DATE
-	-	-	-
-	-	-	-
-	-	-	-

DESIGNED SSW | CHECKED MKB | DRAWN SSW | IN CHARGE CDC

FRAMING PLAN
OHIO TURNPIKE OVER STATE ROUTE 99
ERIE COUNTY
M.P. 111.2

PROJECT 43-24-06
DATE: 03/07/23

OHIO TURNPIKE AND INFRASTRUCTURE COMMISSION

71-21-07_SR099_FRAMING PLAN.dwg: 8/02/23 - 2:57pm

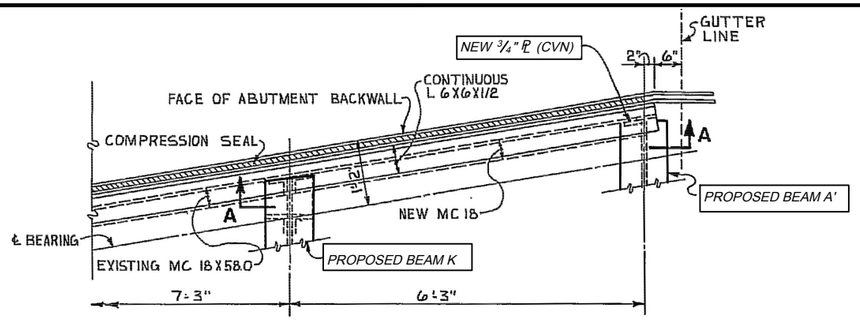

PARTIAL PLAN - END DIAPHRAGMS - BEAMS A' & K

BEAMS A' & K ARE NOT ADJACENT TO EACH OTHER AS SHOWN HERE.
SEE FRAMING PLAN FOR EXACT LOCATIONS.

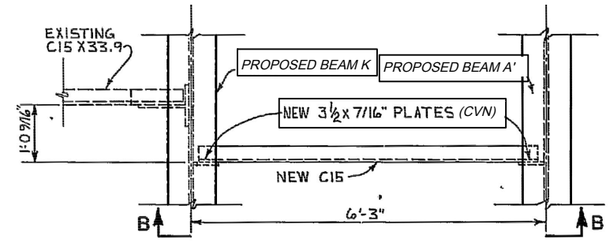

PARTIAL PLAN - INTERMEDIATE DIAPHRAGMS - BEAMS A' & K

BEAMS A' & K ARE NOT ADJACENT TO EACH OTHER AS SHOWN HERE.
SEE FRAMING PLAN FOR EXACT LOCATIONS.

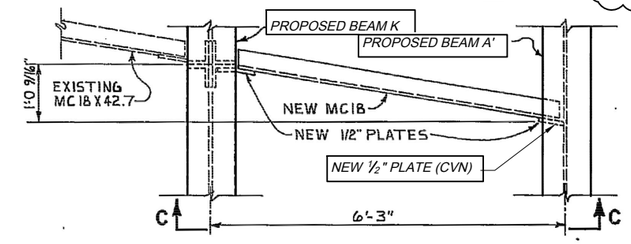

PARTIAL PLAN - PIER DIAPHRAGMS - BEAMS A' & K

BEAMS A' & K ARE NOT ADJACENT TO EACH OTHER AS SHOWN HERE.
SEE FRAMING PLAN FOR EXACT LOCATIONS.

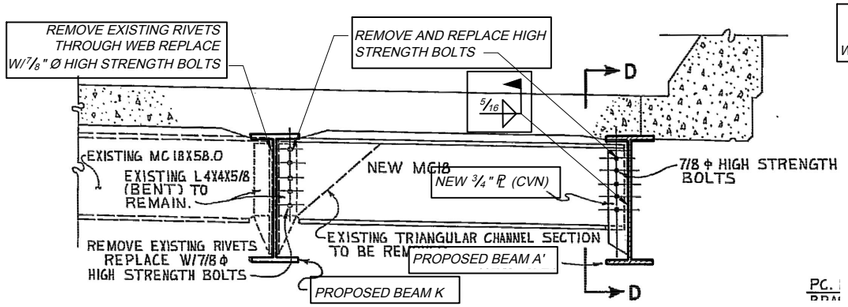

SECTION A-A - BEAMS A' & K

BEAMS A' & K ARE NOT ADJACENT TO EACH OTHER AS SHOWN HERE.
SEE FRAMING PLAN FOR EXACT LOCATIONS.

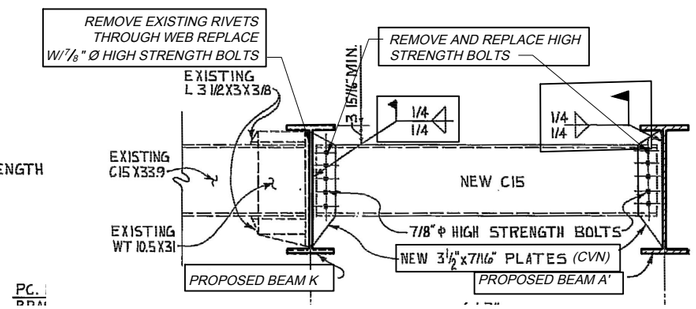

SECTION B-B - BEAMS A' & K

BEAMS A' & K ARE NOT ADJACENT TO EACH OTHER AS SHOWN HERE.
SEE FRAMING PLAN FOR EXACT LOCATIONS.

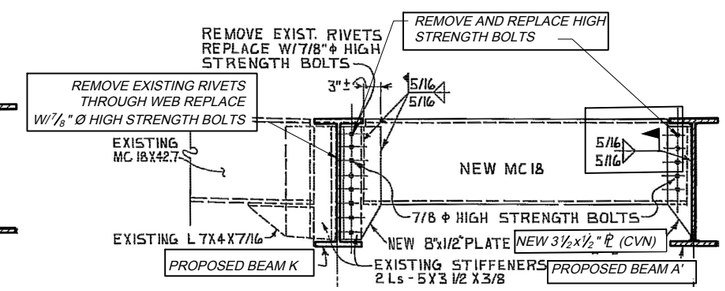

SECTION C-C - BEAMS A' & K

BEAMS A' & K ARE NOT ADJACENT TO EACH OTHER AS SHOWN HERE.
SEE FRAMING PLAN FOR EXACT LOCATIONS.

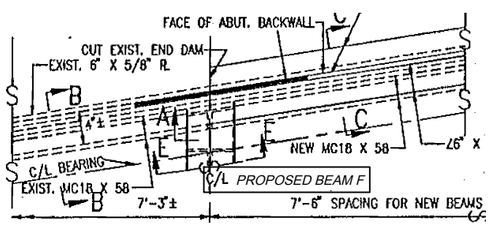

PARTIAL PLAN - END DIAPHRAGMS - BEAM F

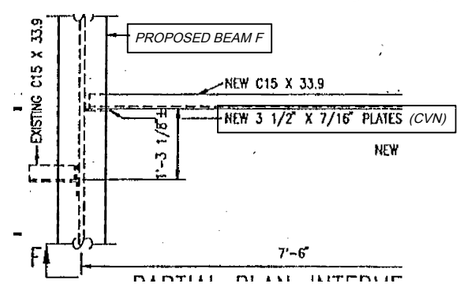

PARTIAL PLAN - INTERMEDIATE DIAPHRAGMS - BEAM F

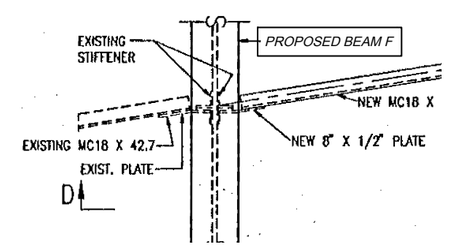

PARTIAL PLAN - PIER DIAPHRAGMS - BEAM F

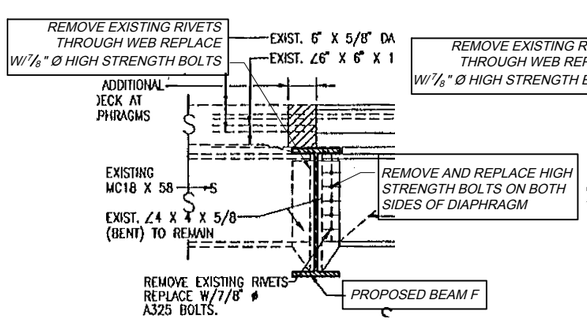

SECTION A-A - BEAM F

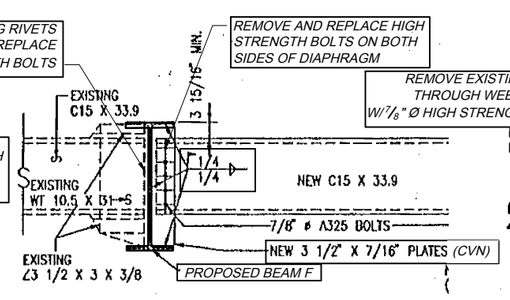

SECTION F-F - BEAM F

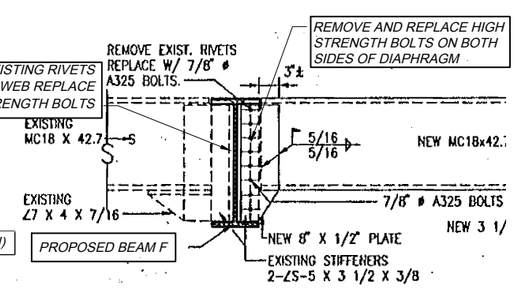

SECTION D-D - BEAM F

NOTES

1. PERFORM ONLY THE WORK INDICATED IN THE FRAMED TEXT THIS SHEET AND/OR DESCRIBED IN THE REMAINING PLANS AND GENERAL NOTES.
2. CONTRACTOR TO REMOVE AND REINSTALL DIAPHRAGMS (AS NEEDED) TO FACILITATE BEAM REPLACEMENT. DETAILS HEREIN IDENTIFY DIAPHRAGM CONNECTIONS FROM EXISTING PLANS. DESIGN INTENT IS TO REMOVE AND REINSTALL DIAPHRAGMS AS PER EXISTING DETAILS, UNLESS MODIFIED HEREIN. CONTRACTOR SHALL, IN PROPOSED SHOP DRAWINGS SUBMITTED FOR APPROVAL, DETAIL ACTUAL STIFFENER/DIAPHRAGM REMOVAL LOCATIONS (WELDED AND BOLTED) AND PROPOSED PLATES BASED ON FIELD VERIFICATION AND THEIR MEANS AND METHODS. CONTRACTOR IS TO FIELD VERIFY CONNECTION PLATE DIMENSIONS AND LOCATIONS, BOLT HOLE LOCATIONS ON THE DIAPHRAGMS AND DIAPHRAGM CONNECTIONS. NEW HOLES ON PROPOSED BEAMS AND CONNECTION PLATES MAY BE FIELD DRILLED TO ENSURE PROPER FIT UP. INCLUDE ALL LABOR, EQUIPMENT AND MATERIALS NECESSARY TO REMOVE AND REINSTALL BEAM DIAPHRAGMS WITH ITEM 513 FOR PAYMENT.
3. ALL CONNECTION PLATE MATERIAL SHALL CONFORM TO ASTM A709 GRADE 50.
4. ALL BOLTS SHALL CONFORM TO ASTM F3125 GRADE A325 AND BE OF THE DIAMETER(S) INDICATED.
5. PROPOSED AND REAMED EXISTING HOLES FOR 7/8" Ø BOLTS SHALL BE 15/16". THREADS SHALL BE EXCLUDED FROM THE SHEAR PLANE.
6. CVN: WHERE A SHAPE OR PLATE IS DESIGNATED (CVN), FURNISH MATERIAL THAT MEETS THE MINIMUM NOTCH TOUGHNESS REQUIREMENTS AS SPECIFIED IN 711.01.
7. FIELD BLAST AND PRIME EXISTING BEAM AND DIAPHRAGM FAYING SURFACES THEN REASSEMBLE AND FULLY TIGHTEN BOLTS AS PER ITEM 513. AFTER BOLTING IS COMPLETE, FIELD APPLY INTERMEDIATE AND FINISH COATS PER SP 514A. INCLUDE WITH ITEM SPECIAL - REPAIR OF EXISTING PAINTED SURFACES, AS PER PLAN FOR PAYMENT.
8. PLAN AND SECTION VIEWS MAY BE OPPOSITE HAND TO ACTUAL FIELD CONDITIONS. DETAILS SHOWN ARE REPRESENTATIVE OF WHAT WOULD BE ENCOUNTERED IN THE FIELD. CONTRACTOR SHALL VERIFY ACTUAL FIELD CONDITIONS AND ORIENTATIONS PRIOR TO FABRICATION AND ERECTION.
9. SEE SHEET 9 / 15 FOR ADDITIONAL DETAILS.

△2 - ADDENDUM - ENTIRE SHEET

DESIGN AGENCY: Michael Baker INTERNATIONAL — MICHAEL BAKER INTL. 4401 EMPEROR BLVD. EAST SUITE 200, DURHAM, NC 27703 P:919-464-1414 F:919-464-6032

NO.	REVISIONS	BY	DATE
-	-	-	-
-	-	-	-
-	-	-	-

DESIGNED	CHECKED	DESIGN ENGINEER OF RECORD
MKB	CDC	CDC
DRAWN	IN CHARGE	
MKB	CDC	

STEEL DETAILS
OHIO TURNPIKE OVER STATE ROUTE 99
ERIE COUNTY
M.P. 111.2

PROJECT 43-24-06
DATE: 03/07/23

9A / 15

70A / 88

OHIO TURNPIKE AND INFRASTRUCTURE COMMISSION

71-21-07_SR099_DIAPRHAGM DETAILS.dwg; 8/02/23 - 2:59pm