STANDARD SPECIFICATIONS

THE STATE OF OHIO DEPARTMENT OF TRANSPORTATION 2019 CONSTRUCTION AND MATERIALS SPECIFICATIONS AND THE OHIO TURNPIKE AND INFRASTRUCTURE COMMISSION SPECIAL PROVISIONS CONTAINED IN THE CONTRACT DOCUMENTS SHALL GOVERN THIS PROJECT.

ORIGINAL CONSTRUCTION PLANS

THE ORIGINAL CONSTRUCTION AND REHABILITATION PLANS, SHOWING THE ORIGINAL ALIGNMENT, PROFILE AND DETAILS OF THE BRIDGE ARE AVAILABLE ON BID EXPRESS WITH THE OTHER BID DOCUMENTS.

WORK LIMITS

THE WORK LIMITS SHOWN ON THESE PLANS ARE FOR PHYSICAL CONSTRUCTION ONLY. THE INSTALLATION AND OPERATION OF ALL TEMPORARY TRAFFIC CONTROL AND TEMPORARY TRAFFIC CONTROL DEVICES REQUIRED BY THESE PLANS SHALL BE PROVIDED BY THE CONTRACTOR WHETHER INSIDE OR OUTSIDE THESE WORK.

CONNECTION BETWEEN EXISTING AND PROPOSED GUARDRAIL

WHEN IT IS NECESSARY TO SPLICE PROPOSED GUARDRAIL TO EXISTING GUARDRAIL, ONLY THE EXISTING GUARDRAIL SHALL BE CUT, DRILLED, OR PUNCHED. THE CONNECTION SHALL BE MADE USING A W-BEAM, BEAM SPLICE AS SHOWN IN AASHTO M 180, EXCEPT THE BEAM WASHERS ARE NOT TO BE USED. PAYMENT SHALL BE INCLUDED IN THE CONTRACT PRICE FOR THE RESPECTIVE GUARDRAIL ITEMS.

AN ITEM FOR TWENTY FIVE (25) FEET OF ITEM 606, GUARDRAIL REBUILT HAS BEEN INCLUDED AT EACH LOCATION WHERE THERE IS A CONNECTION TO EXISTING GUARDRAIL, TO BE USED AS DIRECTED BY THE ENGINEER

CONTINGENCY QUANTITES

THE CONTRACTOR SHALL NOT ORDER MATERIALS OR PERFORM WORK FOR ITEMS DESIGNATED BY PLAN NOTE TO BE USED "AS DIRECTED BY THE CHIEF ENGINEER" UNLESS AUTHORIZED BY THE CHIEF ENGINEER. THE ACTUAL WORK LOCATIONS AND QUANTITIES USED FOR SUCH ITEMS SHALL BE INCORPORATED INTO THE FINAL CHANGE ORDER GOVERNING COMPLETION OF THIS PROJECT.

REVIEW OF DRAINAGE FACILITIES

BEFORE ANY WORK IS STARTED ON THE PROJECT 43-24-08 AND AGAIN BEFORE FINAL ACCEPTANCE BY THE OTIC, REPRESENTATIVES OF THE OTIC AND THE CONTRACTOR, SHALL MAKE AN INSPECTION OF ALL EXISTING SEWERS WHICH ARE TO REMAIN IN SERVICE AND WHICH MAY BE AFFECTED BY THE WORK. THE CONDITION OF THE EXISTING CONDUITS AND THEIR APPURTENANCES SHALL BE DETERMINED FROM FIELD OBSERVATION. RECORDS OF THE INSPECTION SHALL BE KEPT IN WRITING BY THE OTIC REPRESENTATIVE.

ALL EXISTING SEWERS INSPECTED INITIALLY BY THE ABOVE MENTIONED PARTIES SHALL BE MAINTAINED AND LEFT IN A CONDITION REASONABLY COMPARABLE TO THAT DETERMINED BY THE ORIGINAL INSPECTION OR REVISED AS SHOWN IN THESE PLAN. ANY CHANGE IN THE CONDITION RESULTING FROM THE CONTRACTOR'S OPERATIONS SHALL BE CORRECTED BY THE CONTRACTOR TO THE SATISFACTION OF THE CHIEF ENGINEER.

PAYMENT FOR ALL OPERATIONS DESCRIBED ABOVE SHALL BE INCLUDED IN THE CONTRACT PRICE SP 623 CONSTRUCTION LAYOUT SURVEY.

SP 400 AND SP 400S MODIFICATIONS FOR THIS PROJECT

THE FOLLOWING MODIFICATION(S) TO SP 400 WILL APPLY FOR THIS PROJECT:

- THE USE OF A MATERIAL TRANSFER DEVICE (MTD) WILL NOT BE REQUIRED TO PERFORM THE REPAIRS FOR THIS PROJECT.

-THE COMMISSION WILL REVIEW THE GENERAL RIDEABILITY OF THE WORK PERFORMED FOR THE PROJECT AS CALLED FOR IN SECTION III.I. TOLERANCES OF THE FINISHED SURFACE.

THE FOLLOWING MODIFICATION(S) TO SP 400S WILL APPLY FOR THIS PROJECT:

-A CLASS 1 INERTIAL PROFILOMETER IS NOT REQUIRED FOR THIS PROJECT.

-PAVEMENT REPAIRS WILL BE EVALUATED IN ACCORDANCE WITH THE SP 400S.C. ROLLING STRAIGHT EDGE TOLERANCES.

-ANY CORRECTIVE ACTION REQUIRED SHALL BE IN ACCORDANCE WITH SP 400S.E. CORRECTIVE ACTION.

1

UTILITIES

THE CONTRACTOR SHALL USE THE FOLLOWING PROCEDURE IN ACCORDANCE WITH SECTIONS 105.07 AND 107.16 IN THE CONSTRUCTION AND MATERIALS SPECIFICATIONS. THE CONTRACTOR SHALL NOTIFY THE PROJECT ENGINEER, THE OHIO UTILITIES PROTECTION SERVICE (OUPS), THE OHIO & GAS PRODUCERS UNDERGROUND PROTECTION SERVICE (OGPUPS), THE OHIO DEPARTMENT OF TRANSPORTATION DISTRICT 4 HEADQUARTERS, AND ALL NON-REGISTERED UTILITY OWNERS AT LEAST TWO WORKING DAYS PRIOR TO COMMENCING CONSTRUCTION OPERATIONS.

OUPS 1-800-362-2764 (CONTACT LIMITED BASIS PARTICIPANTS DIRECTLY)
OGPUPS 1-800-925-0988
ODOT 330-786-4832 (MATTHEW STEELE)
OTIC 440-821-3366 (MATT MCMULLEN)

LISTED BELOW ARE ALL UTILITIES LOCATED WITHIN THE PROJECT CONSTRUCTION LIMITS TOGETHER WITH THEIR RESPECTIVE OWNERS:

OHIO EDISON
DAVID MILLER
(330) 436-4055
MILLERDL@FIRSTENERGYCORP.COM

CHARTER COMMUNICATIONS
JAMES LONG
(330) 622-4106
JAMES.LONG@CHARTER.COM

AT&T
STEVE HYLTON
(330) 631-7485
SH1513@ATT.COM

CENTURYLINK
CHRIS STRAYER
(330) 886-1299
CHRISTOPHER.STRAYER@CENTURYLINK.COM

MCI WORLDCOM
AL GUEST
(330) 523-8267
ALLAN.GUEST@VERIZON.COM

DOMINION ENERGY
JOSHUA JOSEPH MIS
(330) 571-9135
JOSHUA.J.MIS@DOMINIONENERGY.COM

KNOX ENERGY CO-OP
BOB WENTZEL
(330) 498-9130
BWENTZEL@UTILITYPIPELINELTD.COM

PORTAGE COUNTY WATER RESOURCES
JOHN EVANS
(330) 297-3670
PCWR.PLANS@PORTAGECO.COM

CITY OF STREETSBORO WATER DEPARTMENT
BILL MILLER
(330) 626-2856
BMILLER@CITYOFSTREETSBORO.COM

THE LOCATION OF THE UNDERGROUND UTILITIES SHOWN ON THE PLANS ARE AS OBTAINED FROM THE OWNERS AS REQUIRED BY SECTION 153.64 OF THE OHIO REVISED CODE.

THE CONTRACTOR SHALL NOTE THAT THERE ARE AERIAL UTILITY LINES NEAR THE AREA WHERE STEEL BEAM SPLICE PLATES WILL BE INSTALLED. THESE AERIAL LINES INCLUDE ELECTRICAL LINES SERVING STREET LIGHTING ON STATE ROUTE 43 MAINTAINED BY THE CITY OF STREETSBORO. THE CONTRACTOR SHALL COORDINATE WITH THE CITY OF STREETSBORO AND OHIO EDISON TO DE-ENERGIZE THESE LINES PRIOR TO PERFORMING SURFACE PREPARATION ON THE EXISTING BEAMS AND INSTALLING THE SPLICE PLATES.

PAVEMENT REPAIRS FOR MAINTAINING TRAFFIC

THE FOLLOWING QUANTITIES ARE INCLUDED AS A CONTINGENCY TO BE USED AS DIRECTED BY THE CHIEF ENGINEER FOR PAVEMENT REPAIR MEASURES TO MAINTAIN TRAFFIC. CONTRACTOR SHALL FOLLOW ODOT CMS FOR ITEM 255, EXCEPT THAT PLACEMENT OF THE DOWEL BARS ARE NOT REQUIRED FOR SHORT TERM REPAIRS, CONCRETE SHALL BE CLASS QC1 FOR AREAS WHERE TRAFFIC CAN BE DIVERTED FOR 7 DAYS. AREAS THAT HAVE TO BE OPENED TO TRAFFIC IN A TIMELY MANNER, CONCRETE SHALL BE IN ACCORDANCE WITH ODOT 255.02A, AND MAINTENANCE OF TRAFFIC COSTS INCURRED BY THE CONTRACTOR FOR THESE CURRENTLY UNKNOWN AND UNDEFINED PAVEMENT REPAIRS WILL BE COMPENSATED ON A TIME AND MATERIALS BASIS AS APPROVED BY THE CHIEF ENGINEER. DEPTH FOR PARTIAL REMOVAL WILL BE 5" (+/-) ASPHALT ON CONCRETE TO THE SURFACE OF THE CONCRETE BASE. PLACEMENT MATERIALS ARE SPECIFIED IN 251.03. UNIT PRICE BID FOR THE ITEMS IMMEDIATELY BELOW SHALL NOT INCLUDE MAINTENANCE OF TRAFFIC COSTS.

ITEM 251 -	PARTIAL DEPTH PAVEMENT REPAIR	300 SQ. YD.
ITEM 255 -	FULL DEPTH PAVEMENT REMOVAL AND RIGID REPLACEMENT	300 SQ. YD.
ITEM 255 -	FULL DEPTH PAVEMENT REMOVAL AND RIGID REPLACEMENT (USING RAPID REPAID CONCRETE MIX MATERIAL)	300 SQ. YD.
ITEM 255 -	FULL DEPTH PAVEMENT SAWING	600 FOOT

1

NO.	REVISIONS	BY	DATE
1	SP 400, SP 400S & PAVEMENT REPAIRS	DEB	1/25/24
-	-	-	-
-	-	-	-
-	-	-	-

DESIGN AGENCY
COMPASS INFRASTRUCTURE GROUP

DESIGNED IMF | CHECKED DEB
DRAWN IMF | IN CHARGE GLG

GENERAL NOTES
OHIO TURNPIKE OVER STATE ROUTE 43
M.P. 188.2
PORTAGE COUNTY

PROJECT 43-24-08
DATE: 10/31/23

OHIO TURNPIKE AND INFRASTRUCTURE COMMISSION

Z:\Projects\10027-OTIC 72-22-02\71-22-02\04 Design Phase\Roadway\Sheets\GENERAL NOTES.dwg, OTIC-Half.ctb, PLOT DATE: 2024-01-24 4:49 PM,SCALE: 1:1 , BY: tfoye

GENERAL SUMMARY

ITEM	TOTAL	UNIT	ITEM DESCRIPTION	SHEET NUMBER
			GENERAL	
IB.ART.6	LUMP SUM	LUMP SUM	PREMIUM FOR CONTRACT PERFORMANCE BOND AND PAYMENT BOND	
SP 614	LUMP SUM	LUMP SUM	MAINTAINING TRAFFIC	
SP 619	20	MONTH	FIELD OFFICE	
SP 623	LUMP SUM	LUMP SUM	CONSTRUCTION LAYOUT SURVEY	
624	LUMP SUM	LUMP SUM	MOBILIZATION	
			MAINTENANCE OF TRAFFIC	
251	300	SQ. YD.	PARTIAL DEPTH PAVEMENT REPAIR	2
255	300	SQ. YD.	FULL DEPTH PAVEMENT REMOVAL AND RIGID REPLACEMENT	2
255	300	SQ. YD.	FULL DEPTH PAVEMENT REMOVAL AND RIGID REPLACEMENT (USING RAPID REPAIR CONCRETE MIX MATERIAL)	2
255	600	FT	FULL DEPTH SAWING	2
611	249	FT	12" CONDUIT, TYPE B, 707.33	9
611	1,344	FT	12" SLOTTED DRAIN, TYPE 1	
614	720	DAY	PORTABLE CHANGEABLE MESSAGE SIGN, AS PER PLAN	10
SP 614ZP	10,900	HOURS	ZONE PERSON WITH ZONE VEHICLE	10
SP 614C	12.98	MILE	REMOVAL OF PAVEMENT MARKINGS	10
614	9,715	FT	WORK ZONE PAVEMENT MARKINGS, CHANNELIZING LINE, WHITE, 12"	
614	2.54	MILE	WORK ZONE PAVEMENT MARKINGS, LANE LINE, WHITE, 6"	
614	4,454	FT	WORK ZONE PAVEMENT MARKINGS, CHANNELIZING LINE, YELLOW, 12"	
614	4.54	MILE	WORK ZONE PAVEMENT MARKINGS, EDGE LINE, WHITE, 6"	
614	10.83	MILE	WORK ZONE PAVEMENT MARKINGS, EDGE LINE, YELLOW, 6"	
614	8	EACH	WORK ZONE IMPACT ATTENUATOR, 24" WIDE HAZARDS, (UNIDIRECTIONAL)	
614	10	CU. YD.	ASPHALT CONCRETE FOR MAINTAINING TRAFFIC	
614	5	EACH	REPLACEMENT SIGN	9
614	2	EACH	WORK ZONE CROSSOVER LIGHTING SYSTEM	
SP 622	19,463	FT	PORTABLE CONCRETE BARRIER (WITHOUT GLARE SCREEN)	
SP 622	7,914	FT	PORTABLE CONCRETE BARRIER (WITH GLARE SCREEN)	
SP 626A	1,320	EACH	CONSTRUCTION ZONE MARKERS	
630	16	SQ. FT.	SIGNING, MISC.: ADDITIONAL SIGNS, GROUND MOUNTED, AS DIRECTED BY THE ENGINEER	9
642	10.00	MILE	PAVEMENT MARKING, MISC.: FINAL PAVEMENT MARKING PREPARATION, AS PER PLAN	9
SPECIAL	10,653	FT	"SNAP" MILL AND FILL	9
SPECIAL	LUMP SUM	LUMP SUM	EXISTING CROSSOVER TO BE CLOSED/RE-OPENED	9
			ROADWAY	
201	1	LUMP	CLEARING AND GRUBBING	
202	1,118	FT	CONCRETE BARRIER REMOVED	
202	199	FT	CURB REMOVED	
254	11,610	SQ. YD.	PAVEMENT PLANING	
SP 404	404	CU. YD.	ASPHALT CONCRETE SURFACE COURSE, USING CRUSHED SLAG, PG 76-22 (FR) (T = 1-1/4")	
SP 403	482	CU. YD.	ASPHALT CONCRETE LEVELING COURSE, USING CRUSHED STONE, PG 76-22 (FR) (T=VARIABLE)	
407	1,567	GAL	NON-TRACKING TACK COAT	
606	100	FT	MGS GUARDRAIL REBUILT	
606	2	EACH	MGS BRIDGE TERMINAL, TYPE 1	
606	2	EACH	MGS BRIDGE TERMINAL, TYPE 2	
609	199	FT	ASPHALT CONCRETE CURB, TYPE 1, PG 64-22	
609	15	FT	CURB, TYPE 4C	
611	3	EACH	CATCH BASIN ADJUSTED TO GRADE	
SP 621	24	EACH	RAISED PAVEMENT MARKINGS	
622	1,118	FT	CONCRETE BARRIER, TYPE B-50, AS PER PLAN	
642	2.00	MILE	EDGE LINE, 6", TYPE 1 (WHITE)	

1

1

1

1

DESIGN AGENCY
COMPASS INFRASTRUCTURE GROUP

NO.	REVISIONS	BY	DATE
1	QUANITITY UPDATES & REVISIONS	IMF	1/23/24
-	-	-	-
-	-	-	-

DESIGNED	CHECKED
IMF	DEB
DRAWN	IN CHARGE
IMF	GLG

GENERAL SUMMARY (1 OF 2)
OHIO TURNPIKE OVER STATE ROUTE 43
PORTAGE COUNTY
M.P. 188.2

PROJECT 43-24-08
DATE: 10/31/23

3
65

OHIO TURNPIKE AND INFRASTRUCTURE COMMISSION

GENERAL SUMMARY.dwg: 1/25/24 - 2:25pm

ITEM	TOTAL	UNIT	ITEM DESCRIPTION	SHEET NUMBER
			ROADWAY (CONTINUED)	
642	2.00	MILE	EDGE LINE, 6", TYPE 1 (YELLOW)	
642	6.00	MILE	LANE LINE, 6", TYPE 1 (WHITE)	
SP 626	8	EACH	BARRIER REFLECTOR, TYPE B, WHITE	
SP 626	16	EACH	BARRIER REFLECTOR, TYPE B, YELLOW	
SP 626	8	EACH	GUARDRAIL REFLECTOR, TYPE A, WHITE	
SPECIAL	10,653	FT	SONIC NAP ALERT PATTERN (SNAP)	
			STRUCTURES	
202	425	SQ. YD.	APPROACH SLAB REMOVED	
SP 202	1	LUMP	PORTIONS OF STRUCTURE REMOVED, AS PER PLAN	55
SP 509	189,875	POUND	EPOXY COATED REINFORCING STEEL, GRADE 60	
509	100	POUND	REINFORCING STEEL, REPLACEMENT OF EXISTING REINFORCING STEEL	
SP 511(QC2)	495	CU. YD.	CLASS QC2 CONCRETE, SUPERSTRUCTURE DECK SLAB	
SP 511(QC2)	134	CU. YD.	CLASS QC2 CONCRETE, BARRIERS AND PARAPETS	
SP 511(QC2)	131	CU. YD.	CLASS QC2 CONCRETE, ABUTMENT SLABS	
511	2	CU. YD.	CLASS QC1 CONCRETE, ABUTMENT NOT INCLUDING FOOTING	
513	12,042	EACH	WELDED STUD SHEAR CONNECTORS	
513	20	EACH	STRUCTURAL STEEL, MISC: COVER PLATE FATIGUE RETROFIT	45
513	16	EACH	STRUCTURAL STEEL, MISC: END DIAPHRAGM REPLACEMENT	45
SP 516B	726	FOOT	SEALING OF CONSTRUCTION JOINTS	46
SP 516G	36	EACH	REPLACE EXPANSION BEARING DEVICE	
516	1	LUMP	JACKING AND TEMPORARY SUPPORT OF SUPERSTRUCTURE	
SP 519	32	SQ. FT.	PATCHING OF CONCRETE STRUCTURES	
526	425	SQ. YD.	REINFORCED CONCRETE APPROACH SLABS	
SP 527	1	LUMP	FALSEWORK, TEMPORARY BRACING AND PROTECTIVE STRUCTURES	
SP 533	254	FOOT	3" CONTINUOUS STRIP SEAL IN STRUCTURAL STEEL JOINT	
SP 536	2,396	SQ. YD.	CONCRETE WEATHERPROOFING, DECK, ABUTMENT SLABS, AND APPROACH SLABS	
SP 536	916	SQ. YD.	CONCRETE WEATHERPROOFING, SUBSTRUCTURE	
SP 536	582	SQ. YD.	CONCRETE WEATHERPROOFING, PARAPETS	

1

DESIGN AGENCY
COMPASS INFRASTRUCTURE GROUP

NO.	REVISIONS	BY	DATE
1	UPDATED BARRIER QUANTITY	IMF	1/23/24
-	-	-	-
-	-	-	-

DESIGNED IMF | CHECKED DEB
DRAWN IMF | IN CHARGE GLG

GENERAL SUMMARY (2 OF 2)
OHIO TURNPIKE OVER STATE ROUTE 43
M.P. 188.2
PORTAGE COUNTY

PROJECT 43-24-08
DATE: 10/31/23

4 / 65

OHIO TURNPIKE AND INFRASTRUCTURE COMMISSION

GENERAL SUMMARY2.dwg: 1/25/24 - 1:43pm

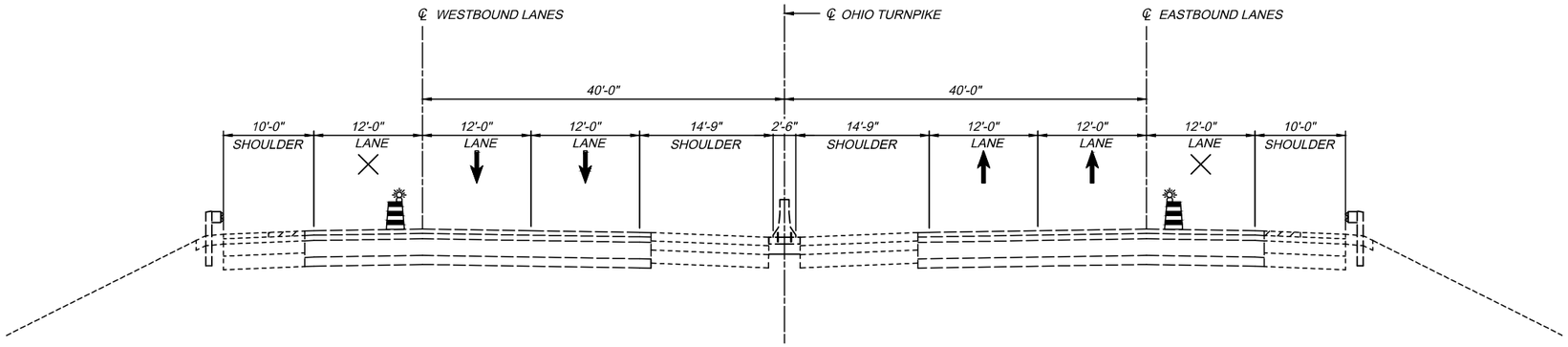

MOT TYPICAL SECTION - PRE-PHASE 1
SNAP REMOVAL & SHOULDER REPAIRS

LIMITING STATIONS:
STA. 95+48.83 TO STA. 189+30.00

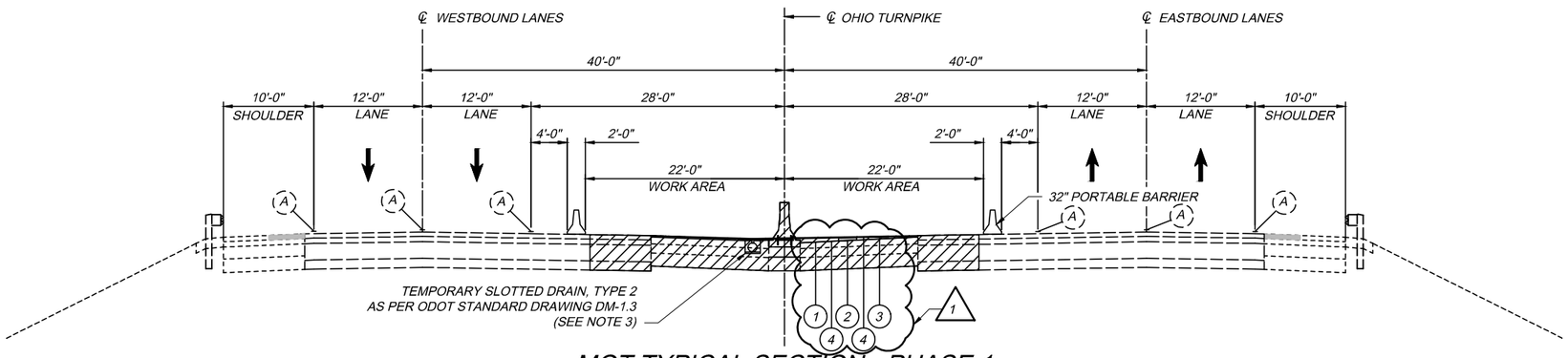

MOT TYPICAL SECTION - PHASE 1
CROSSOVER CONSTRUCTION

LIMITING STATIONS:
STA. 100+28.83 TO STA. 178+29.37

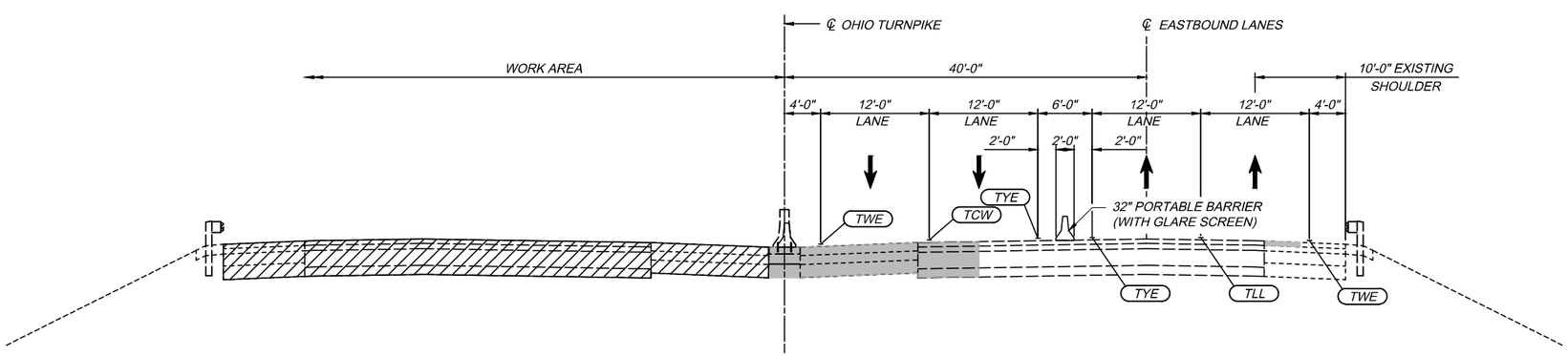

MOT TYPICAL SECTION - PHASE 2
WESTBOUND CONSTRUCTION

LIMITING STATIONS:
STA. 93+42.13 TO STA. 178+63.30

LEGEND:

- WORK THIS PHASE
- WORK COMPLETED IN PREVIOUS PHASE
- (A) EXISTING PAVEMENT MARKING
- (1) ITEM 254 - PAVEMENT PLANING, ASPHALT CONCRETE (VARIABLE DEPTH)
- (2) ITEM SP 404 - ASPHALT CONCRETE SURFACE COURSE, USING CRUSHED STONE, PG64-22 (1¼" MINIMUM)
- (3) ITEM SP 403 - ASPHALT CONCRETE LEVELING COURSE, USING CRUSHED STONE, PG 76-22 (FR) (T=VARIABLE)
- (4) ITEM SP 407 - NON-TRACKING TACK COAT
- TCW ITEM 614, WORK ZONE PAVEMENT MARKINGS, CHANNELIZING LINE, WHITE, 12"
- TLL ITEM 614, WORK ZONE PAVEMENT MARKINGS, LANE LINE, WHITE, 6"
- TCY ITEM 614, WORK ZONE PAVEMENT MARKINGS, CHANNELIZING, YELLOW, 12"
- TWE ITEM 614, WORK ZONE PAVEMENT MARKINGS, EDGE LINE, WHITE, 6"
- TYE ITEM 614, WORK ZONE PAVEMENT MARKINGS, EDGE LINE,YELLOW, 6"

NOTES:

1. THE CONTRACTOR SHALL SCHEDULE SHOULDER REHABILITATION SO THAT THERE ARE NO DROP OFFS WITHIN THE CONSTRUCTION ZONE AT THE END OF EACH WORK DAY.
2. FOR DETAILS OF SIDE MOUNTED DELINEATORS ON PORTABLE BARRIER SEE OTIC STANDARD DRAWING TCR-4 AND TCR-14.
3. FOR CONDUIT LIMITS, CONDUIT TIE-IN POINTS, AND ADDITIONAL DETAILS, SEE SHEETS 40-41/65.

DESIGN AGENCY: COMPASS INFRASTRUCTURE GROUP

NO.	REVISIONS	BY	DATE
1	PAVEMENT CLARIFICATION	IMF	1/25/24
-	-	-	-
-	-	-	-

DESIGNED MBM | CHECKED JAH | DRAWN MBM | IN CHARGE GLG

MAINTENANCE OF TRAFFIC
TYPICAL SECTIONS - PHASE 1 AND PHASE 2
M.P. 188.2 PORTAGE COUNTY

PROJECT 43-24-08
DATE: 10/31/23

11/65

OHIO TURNPIKE AND INFRASTRUCTURE COMMISSION

Z:\Projects\10027-OTIC 72-22-02\71-22-02\04 Design Phase\MOT\Sheets\71-22-02_MOT_Typical_Section_001.dwg, OTIC-Half.ctb, PLOT DATE: 2024-01-26 2:13 PM,SCALE: 1:1, BY: lfoye

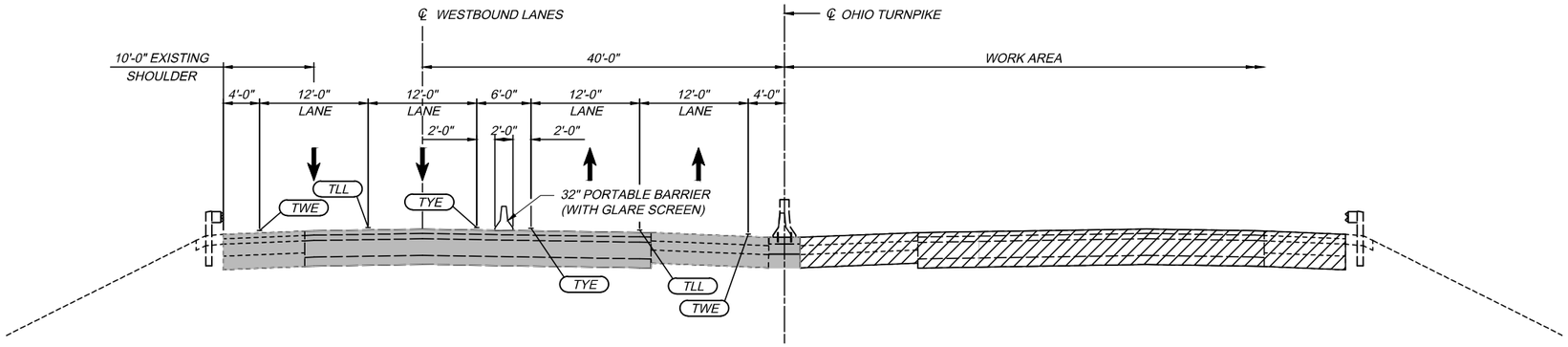

MOT TYPICAL SECTION - PHASE 3
EASTBOUND CONSTRUCTION

LIMITING STATIONS:
STA. 95+48.83 TO STA. 189+30.00

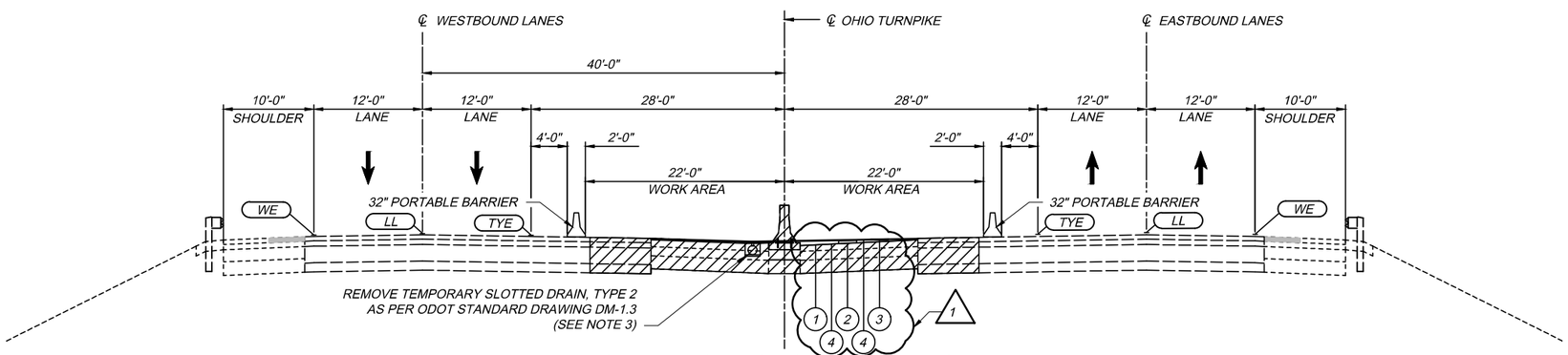

MOT TYPICAL SECTION - PHASE 4
CROSSOVER REMOVAL

LIMITING STATIONS:
STA. 95+93.95 TO STA. 178+29.37

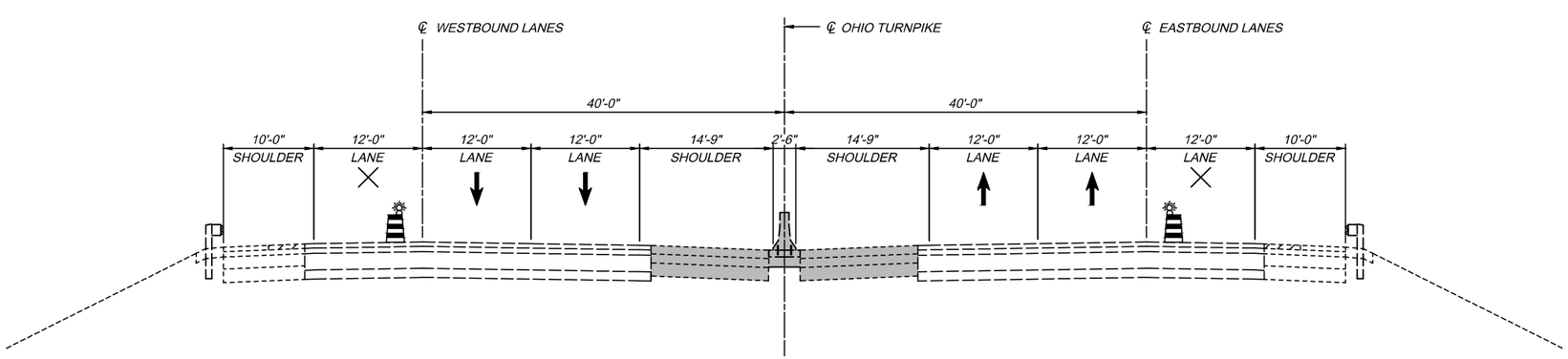

MOT TYPICAL SECTION - POST-PHASE 4
SNAP INSTALLATION

LIMITING STATIONS:
STA. 95+48.83 TO STA. 189+30.00

LEGEND:

- WORK THIS PHASE
- WORK COMPLETED IN PREVIOUS PHASE
- (A) EXISTING PAVEMENT MARKING
- (1) ITEM 254 - PAVEMENT PLANING, ASPHALT CONCRETE (VARIABLE DEPTH)
- (2) ITEM SP 404 - ASPHALT CONCRETE SURFACE COURSE, USING CRUSHED STONE, PG64-22 (1 1/4" MINIMUM)
- (3) ITEM SP 403 - ASPHALT CONCRETE LEVELING COURSE, USING CRUSHED STONE, PG 76-22 (FR) (T=VARIABLE)
- (4) ITEM SP 407 - NON-TRACKING TACK COAT
- TCW — ITEM 614, WORK ZONE PAVEMENT MARKINGS, CHANNELIZING LINE, WHITE, 12"
- TLL — ITEM 614, WORK ZONE PAVEMENT MARKINGS, LANE LINE, WHITE, 6"
- TCY — ITEM 614, WORK ZONE PAVEMENT MARKINGS, CHANNELIZING, YELLOW, 12"
- TWE — ITEM 614, WORK ZONE PAVEMENT MARKINGS, EDGE LINE, WHITE, 6"
- TYE — ITEM 614, WORK ZONE PAVEMENT MARKINGS, EDGE LINE,YELLOW, 6"
- WE — ITEM 624, EDGE LINE, 6", TYPE 1 (WHITE)
- LL — ITEM 624, LANE LINE, 6", TYPE 1 (WHITE)

NOTES:

1. THE CONTRACTOR SHALL SCHEDULE SHOULDER REHABILITATION SO THAT THERE ARE NO DROP OFFS WITHIN THE CONSTRUCTION ZONE AT THE END OF EACH WORK DAY.
2. FOR DETAILS OF SIDE MOUNTED DELINEATORS ON PORTABLE BARRIER SEE OTIC STANDARD DRAWING TCR-4 AND TCR-14.
3. FOR CONDUIT LIMITS, CONDUIT TIE-IN POINTS, AND ADDITIONAL DETAILS, SEE SHEETS 40-41/65.

DESIGN AGENCY

NO.	REVISIONS	BY	DATE
1	PAVEMENT CLARIFICATION	IMF	1/25/24
-	-	-	-
-	-	-	-

DESIGNED	CHECKED	DRAWN	IN CHARGE
MBM	JAH	MBM	GLG

MAINTENANCE OF TRAFFIC
TYPICAL SECTIONS - PHASE 3 AND PHASE 4
PORTAGE COUNTY
M.P. 188.2

PROJECT 43-24-08
DATE: 10/31/23

OHIO TURNPIKE AND INFRASTRUCTURE COMMISSION

Z:\Projects\10027-OTIC T2-22-02\T1-22-02\04 Design Phase\MOT\Sheets\T1-22-02_MOT_Typical_Section_002.dwg, OTIC-Half.ctb, PLOT DATE: 2024-01-25 2:11 PM,SCALE: 1:1, BY: lfoye

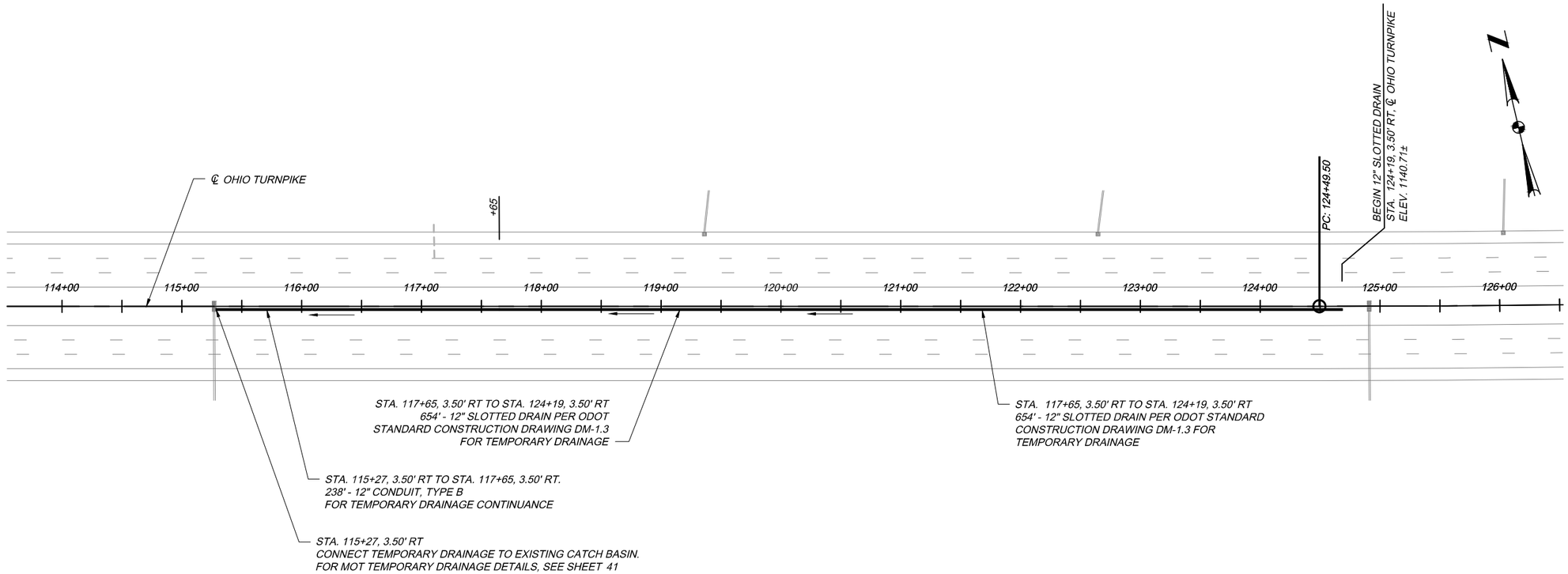

TEMPORARY DRAINAGE PLAN - CROSSOVER NUMBER 1

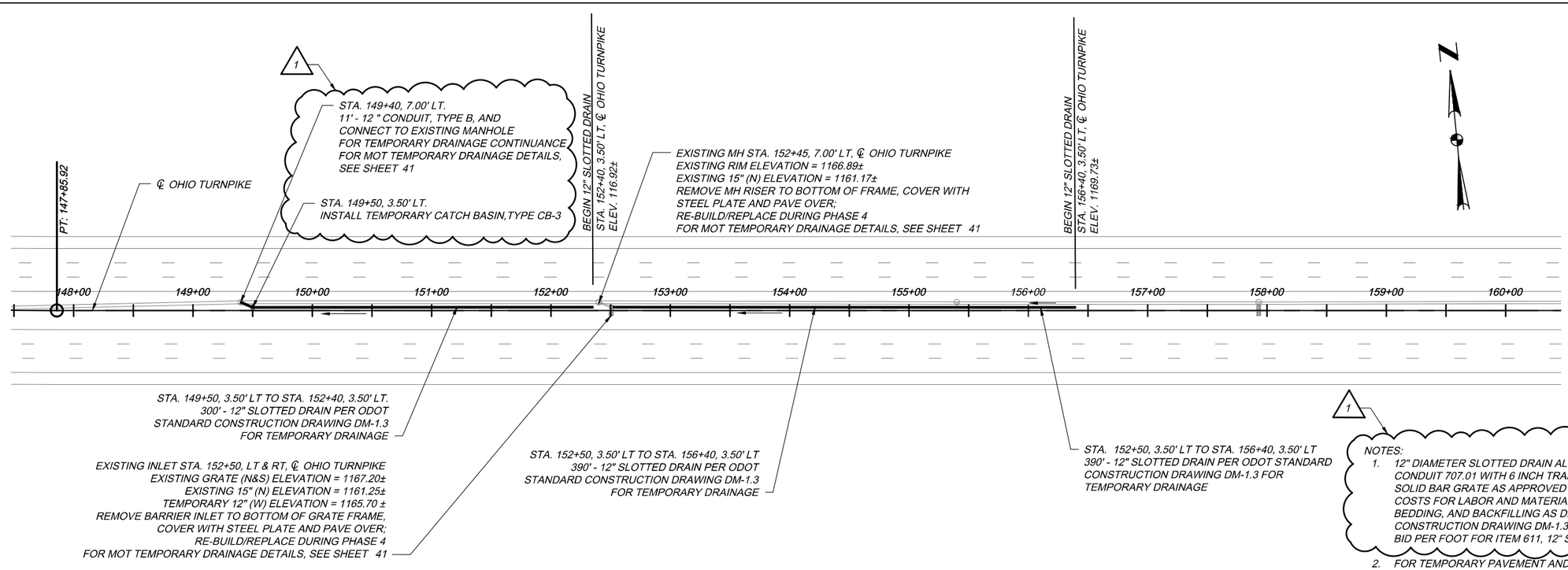

TEMPORARY DRAINAGE PLAN - CROSSOVER NUMBER 2

1

NOTES:

1. 12" DIAMETER SLOTTED DRAIN ALUMINUM COATED STEEL CONDUIT 707.01 WITH 6 INCH TRAPEZOIDAL GALVANIZED SOLID BAR GRATE AS APPROVED BY THE ENGINEER. ALL COSTS FOR LABOR AND MATERIALS, INCLUDING TYPE 2 BEDDING, AND BACKFILLING AS DETAILED ON STANDARD CONSTRUCTION DRAWING DM-1.3 IS INCLUDED IN THE PRICE BID PER FOOT FOR ITEM 611, 12" SLOTTED DRAIN,TYPE 1 .
2. FOR TEMPORARY PAVEMENT AND TEMPORARY DRAINAGE PLACEMENT DETAILS, SEE SHEET 6 - 7
3. FOR PHASING DETAILS SEE SHEETS 14 - 33
4. FOR CROSSOVER GEOMETRY, SEE SHEETS 34 - 39
5. FOR TEMPORARY DRAINAGE TIE-IN DETAILS, SEE SHEET 41

DESIGN AGENCY
COMPASS INFRASTRUCTURE GROUP

NO.	REVISIONS	BY	DATE
1	CLARIFIED TEMPORARY DRAINAGE	IMF	1/23/24
-	-	-	-
-	-	-	-
-	-	-	-

DESIGNED	CHECKED
MBM	JAH
DRAWN	IN CHARGE
MBM	GLG

MAINTENANCE OF TRAFFIC PLAN
TEMPORARY DRAINAGE PLAN
PORTAGE COUNTY
M.P. 188.2

PROJECT 43-24-08
DATE: 10/31/23

OHIO TURNPIKE AND INFRASTRUCTURE COMMISSION

Z:\Projects\10027-OTC 72-22-02\71-22-02\04 Design Phase\MOT\Sheets\71-22-02_MOT_TEMP_DRAINAGE_PLAN.dwg, OTIC-Half.ctb, PLOT DATE: 2024-01-23 4:34 PM,SCALE: 1:1, BY: lloya

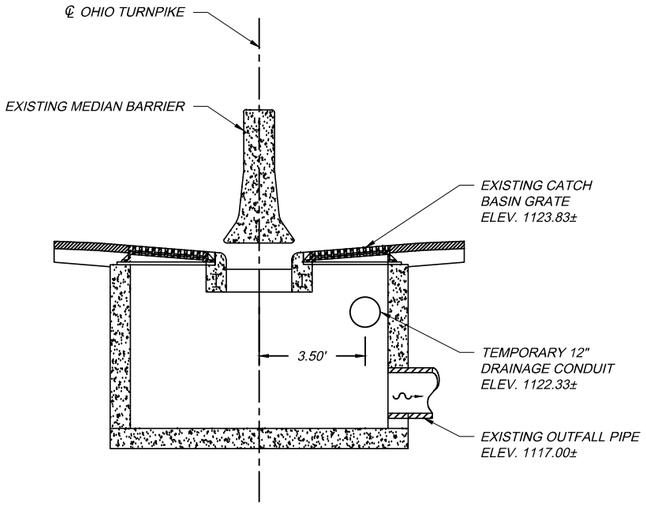

TEMPORARY DRAINAGE CONDUIT TIE-IN DETAIL
STA. 115+27
N.T.S.

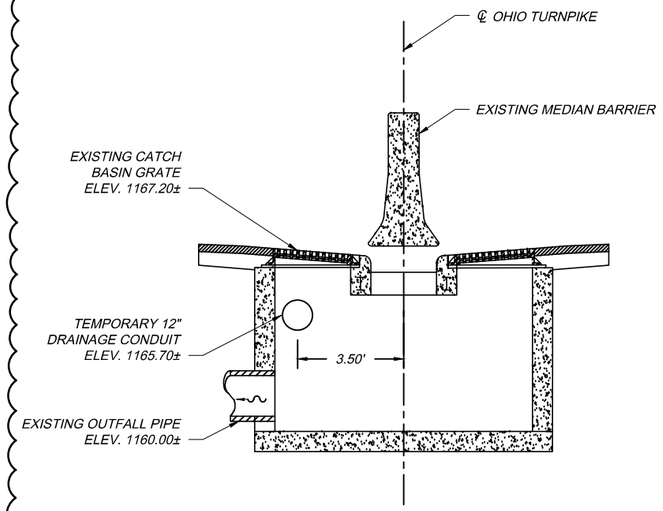

TEMPORARY DRAINAGE CONDUIT TIE-IN DETAIL
STA. 152+50
N.T.S.

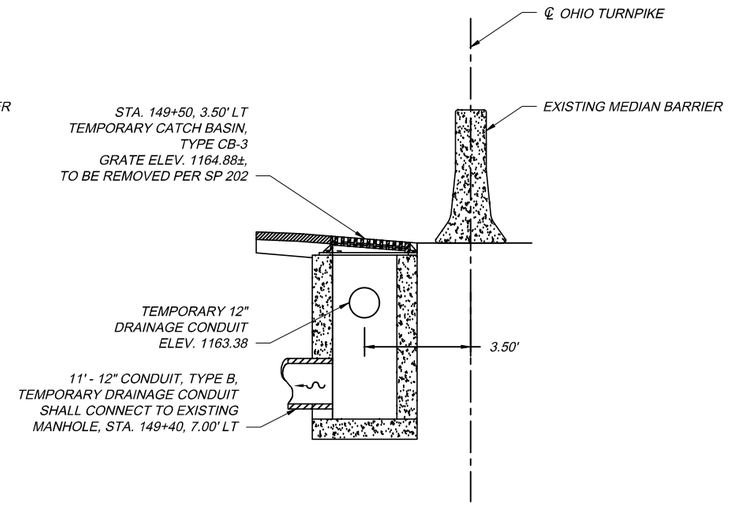

TEMPORARY CATCH BASIN
STA. 149+50
N.T.S.

1

DESIGN AGENCY
COMPASS INFRASTRUCTURE GROUP

NO.	REVISIONS	BY	DATE
1	CLARIFIED TEMPORARY DRAINAGE	IMF	1/23/24
-	-	-	-
-	-	-	-

DESIGNED	CHECKED
MBM	JAH
DRAWN	IN CHARGE
MBM	GLG

MAINTENANCE OF TRAFFIC DETAILS
TEMPORARY DRAINAGE DETAILS
M.P. 188.2 PORTAGE COUNTY

PROJECT 43-24-08
DATE: 10/31/23

41
65

OHIO TURNPIKE AND INFRASTRUCTURE COMMISSION

Z:\Projects\10027-OTIC T2-22-02\71-22-02\04 Design Phase\MOT\Sheets\71-22-02_MOT_TEMP_DRAINAGE_DETAILS.dwg, OTIC-Half.ctb, PLOT DATE: 2024-01-23 3:56 PM,SCALE: 1:1, BY: lfoye