* CFS JAMB (TYP)
(SEE CFS FRAMING NOTE 20 ON SHEET S002)

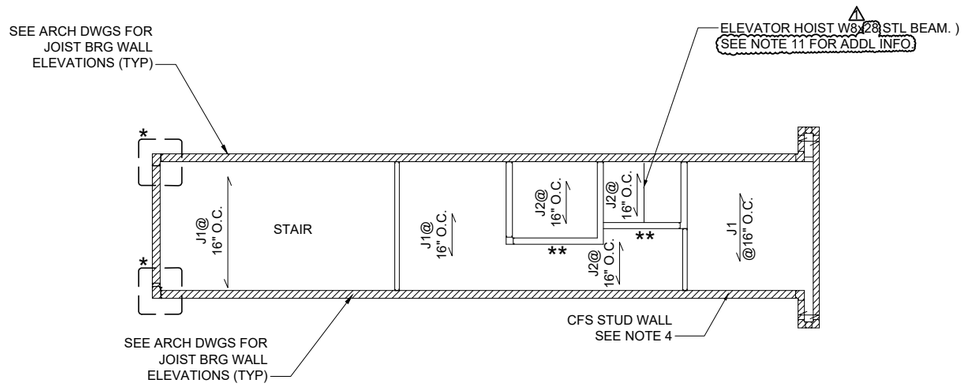

2 SECONDARY UTILITY BUILDING ROOF FRAMING PLAN - SOUTH

S102 SCALE: 1/16" = 1'-0"

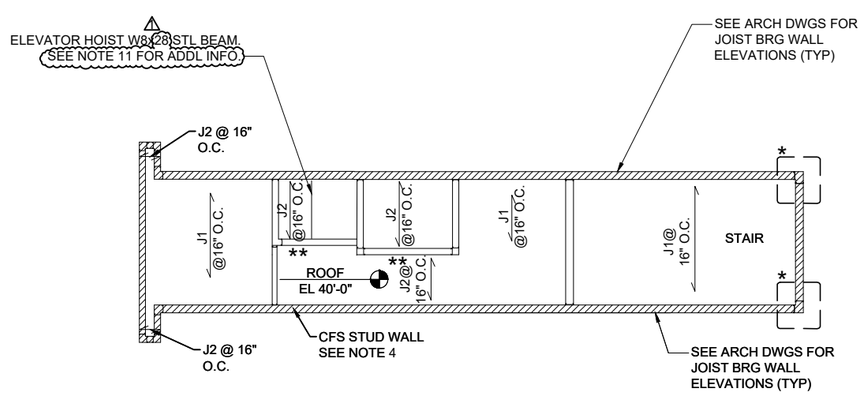

1 MAIN UTILITY BUILDING ROOF FRAMING PLAN - NORTH

S102 SCALE: 1/16" = 1'-0"

NOTES:

1. SEE SHEETS S001 AND S002 FOR STRUCTURAL GENERAL NOTES.
2. SEE ARCHITECTURAL PLANS FOR LAYOUT DIMENSIONS AND/OR ELEVATIONS NOT SHOWN ON THIS PLAN. WHERE THERE IS DISCREPANCY IN DIMENSION AND/OR ELEVATION NOTATIONS BETWEEN THE STRUCTURE AND ARCHITECTURAL DRAWINGS, THE ARCHITECTURAL DRAWING SHALL GOVERN.
3. ALL ELEVATIONS ARE REFERENCED FROM:
   BASE ELEVATION 0'-0" = 682.45 (CIVIL) MAIN UTILITY BUILDING.
   BASE ELEVATION 0'-0" = 682.70 (CIVIL) SECONDARY UTILITY BUILDING.
4. COLD FORM STEEL STUD WALL, SCHEDULE, REFER SHEET S501.
6. PROVIDE THE EXTERIOR, INTERIOR SHEAR WALL (@ 15'-0" O.C. MAX, EACH DIRECTION) PLANS AND SHEAR WALL SCHEDULE, SHEATHING AS REQUIRED BY DESIGN. SHEAR WALL AND CONNECTIONS ARE TO BE DESIGNED AND DETAILED BY THE FABRICATOR'S DELEGATED DESIGN PROFESSIONAL. THE DESIGN SHALL BE SUBMITTED BY THE CONTRACTOR TO THE ARCHITECT AND/OR ENGINEER FOR REVIEW AS A DEFERRED SUBMITTAL.
7. COORDINATE ALL FLOOR, ROOF AND WALL PENETRATIONS WITH THE CONSTRUCTION DOCUMENTS.
8. REFER TO ARCHITECTURAL DRAWINGS FOR ROOF PLYWOOD DECK.
9. REFER TO ARCHITECTURAL DRAWINGS FOR LOCATION OF DOORS AND WINDOWS OPENINGS.
10. CONTRACTOR IS RESPONSIBLE FOR COORDINATING ALL MECHANICAL UNIT LOCATIONS, SIZES, AND WEIGHTS WITH MEP DISCIPLINE PRIOR TO FABRICATION OF ROOF FRAMING MEMBERS.
11. THE VERTICAL STUDS (MIN. 4) SUPPORTING THE HOIST BEAM END REACTION OF (2500 # SERVICE LOAD) AND THE CONNECTION DETAIL DESCRIBING THIS SUPPORT SHALL BOTH BE DESIGNED BY THE COLD-FORMED METAL FRAMING PROFESSIONAL ENGINEER.

FLOOR / ROOF CONSTRUCTION SCHEDULE	
JOIST MARK	SIZE
J1, J2	8" MIN

LEGEND:

-] DENOTES TYPICAL WALL STUD
- DENOTES EXTERIOR AND STAIR STUD WALL
- ** DENOTES INTERIOR STUD BEARING WALL
- DENOTES JOIST FRAMING DIRECTION

STATE OF OHIO CAMILLE A. MALEH E-63004 REGISTERED PROFESSIONAL ENGINEER

GRAPHIC SCALE 0' 32' 64'

DESIGN AGENCY: PRIME AE, 540 White Pond Drive, Ste. E, Akron, Ohio 44320, (330)-864-7755

NO.	REVISIONS	BY	DATE
1	REVISION # 1	NN	7/7/2020

DESIGNED NN | CHECKED CAM | DRAWN DPF | IN CHARGE CAM

OHIO TURNPIKE AND INFRASTRUCTURE COMMISSION

ROOF FRAMING PLAN

TOLL PLAZA 49 — LUCAS COUNTY

PROJECT 58-20-01 DATE: 6/15/2020

S102

41 / 221

TOLL PLAZA 49 6/12/2020 10:19:50 AM

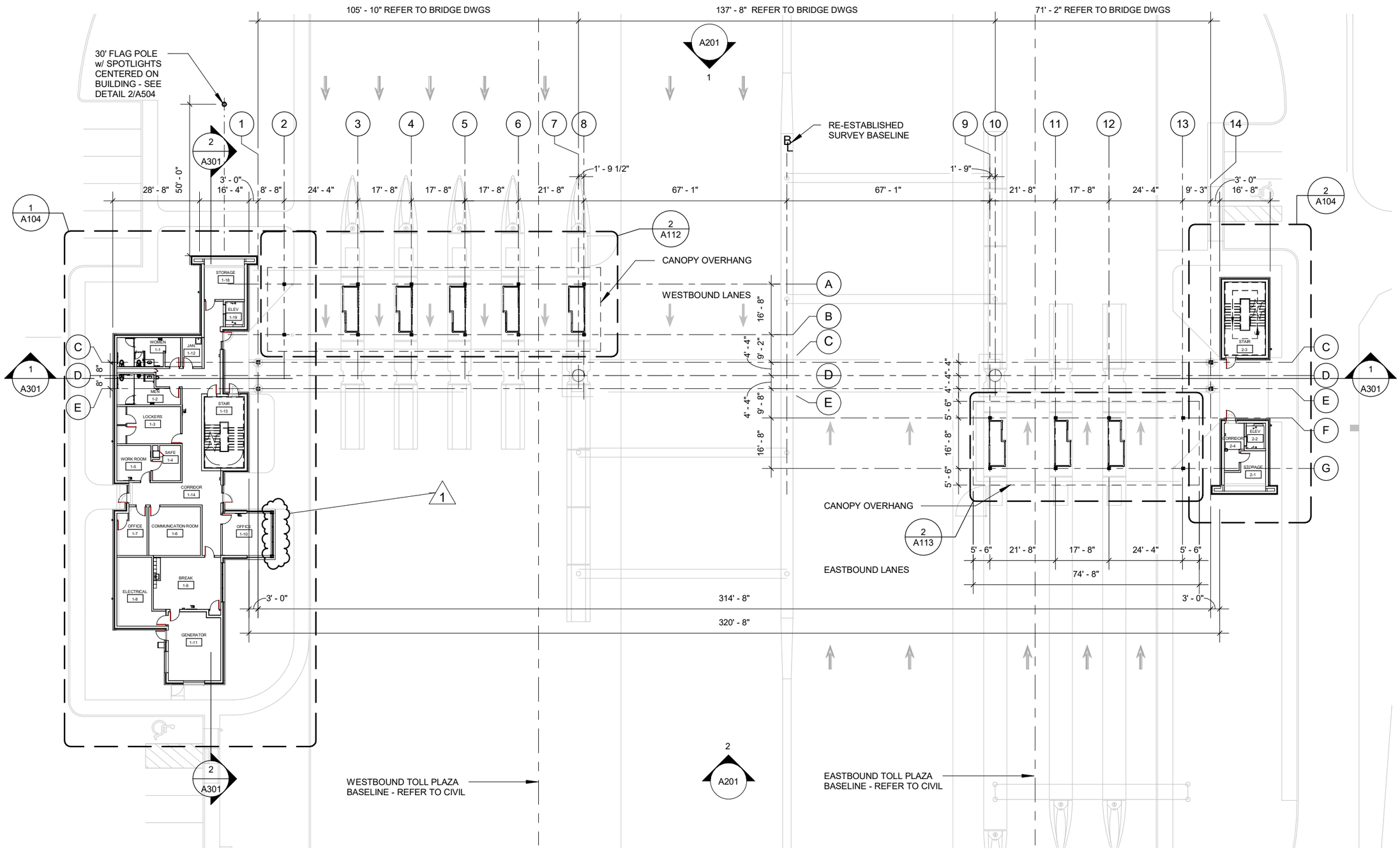

1 OVERALL FIRST FLOOR PLAN

A102

SCALE: 1/32" = 1'-0"

COORDINATE ALL FINISH FLOOR ELEVATIONS WITH CIVIL DRAWINGS

GRAPHIC SCALE 0' 32' 64'

DESIGN AGENCY
PRIME AE
540 White Pond Drive, Ste. E
Akron, Ohio 44320
(330)-864-7755

NO.	REVISIONS	BY	DATE
1	ADDENDUM 1		7/7/2020

DESIGNED MWM
DRAWN MAK
CHECKED MWM
IN CHARGE CAR

OVERALL FIRST FLOOR PLAN
TOLL PLAZA 49
LUCAS COUNTY

PROJECT 58-20-01
DATE: 6/15/2020

A102

64 / 221

OHIO TURNPIKE AND INFRASTRUCTURE COMMISSION

TOLL PLAZA 49 7/7/2020 10:26:40 AM

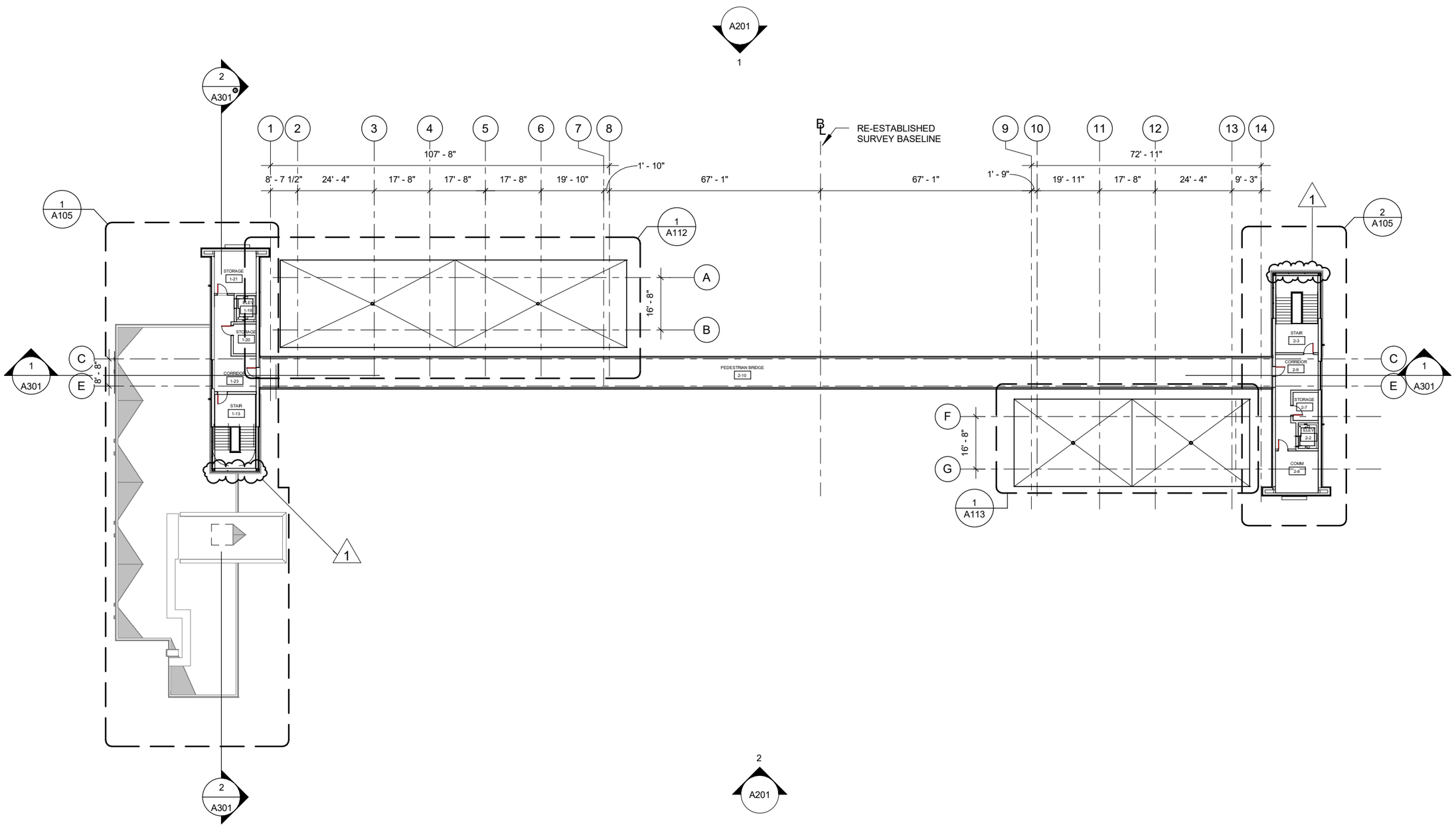

1 LEVEL 2 - OVERALL SECOND FLOOR PLAN

A103 SCALE: 1/32" = 1'-0"

GRAPHIC SCALE

0' 32' 64'

DESIGN AGENCY

PRIME AE

540 White Pond Drive, Ste. E
Akron, Ohio 44320
(330)-864-7755

NO.	REVISIONS	BY	DATE
1	ADDENDUM 1		7/7/2020

DESIGNED MWM | CHECKED MWM | IN CHARGE CAR | DRAWN MAK

OVERALL SECOND FLOOR PLAN

TOLL PLAZA 49

LUCAS COUNTY

PROJECT 58-20-01

DATE: 6/15/2020

A103

65
221

OHIO TURNPIKE

OHIO TURNPIKE AND INFRASTRUCTURE COMMISSION

TOLL PLAZA 49

7/7/2020 10:25:08 AM

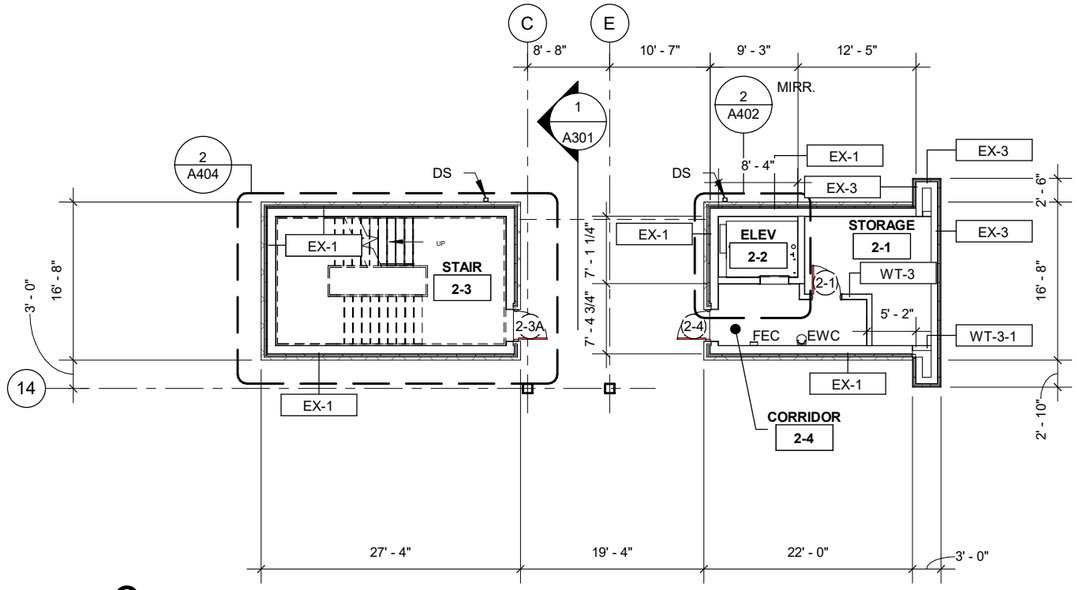

2 SECONDARY UTILITY BUILDING FIRST FLOOR PLAN

A104

SCALE: 1/16" = 1'-0"

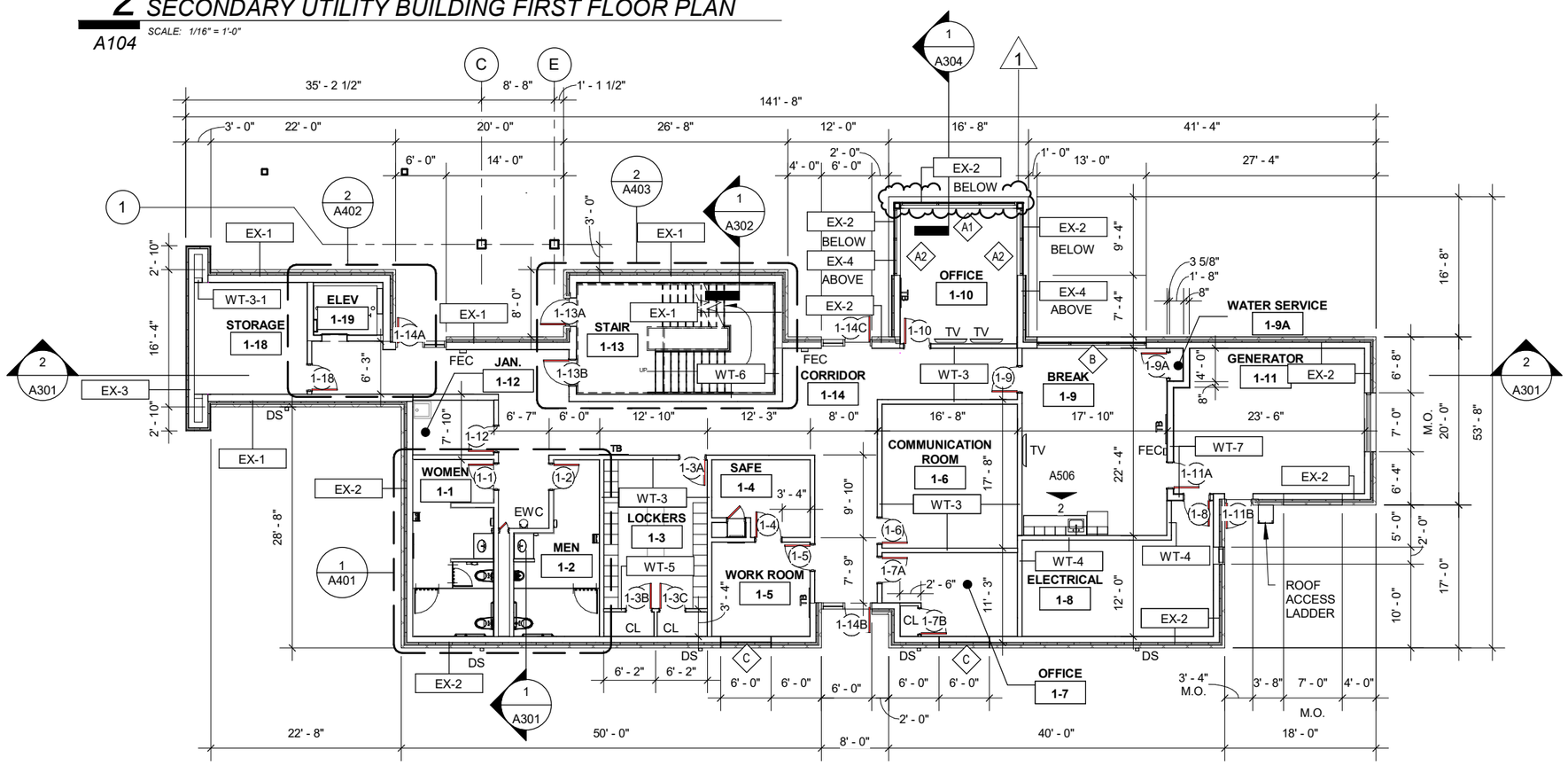

1 MAIN UTILITY BUILDING FIRST FLOOR PLAN

A104

SCALE: 1/16" = 1'-0"

COORDINATE ALL FINISH FLOOR ELEVATIONS WITH CIVIL DRAWINGS

GRAPHIC SCALE

0 8' 16' 32'

GENERAL NOTES

1. DIMENSIONS SHOWN ARE TO FACE OF STUD / FURRING OR FACE OF C.M.U. UNLESS NOTED OTHERWISE
2. REFER TO DRAWINGS A801 AND A802 FOR WALL TYPE DESCRIPTIONS AND DETAILS
3. ALL GYPSUM BOARD EDGES SHALL BE LOCATED ON A SUPPORT
4. REFER TO SHEET G003 AND G004 FOR LOCATION OF FIRE RATED WALLS.
5. FURNISHINGS AND EQUIPMENT BY OWNER ARE NOTED AS N.I.C. OR SHOWN DASHED. REFER TO A701.
6. REFER TO SHEET A605 FOR FINISH SCHEDULE AND INFORMATION.
7. TB INDICATES WALL-MOUNTED TACK BOARD, BOTTOM OF BOARD AT +42" A.F.F.

DESIGN AGENCY
PRIME AE
540 White Pond Drive, Ste. E
Akron, Ohio 44320
(330)-864-7755

NO.	REVISIONS	BY	DATE
1	ADDENDUM 1		7/7/2020

DESIGNED MWM | DRAWN MAK | CHECKED MWM | IN CHARGE CAR

FIRST FLOOR PLAN

TOLL PLAZA 49

LUCAS COUNTY

PROJECT 58-20-01

DATE: 6/15/2020

A104

OHIO TURNPIKE AND INFRASTRUCTURE COMMISSION

7/7/2020 10:22:34 AM

TOLL PLAZA 49

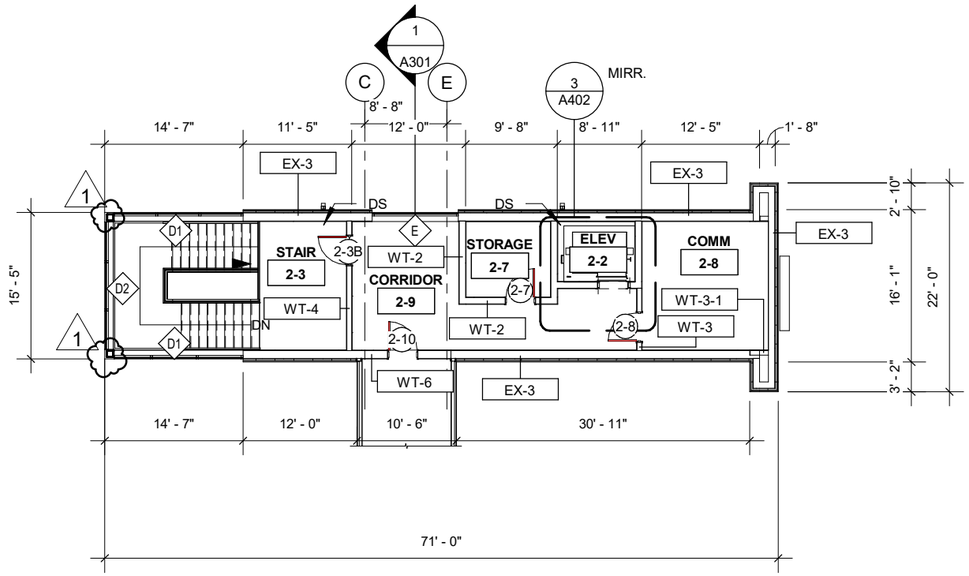

2 SECONDARY UTILITY BUILDING SECOND FLOOR PLAN

A105

SCALE: 1/16" = 1'-0"

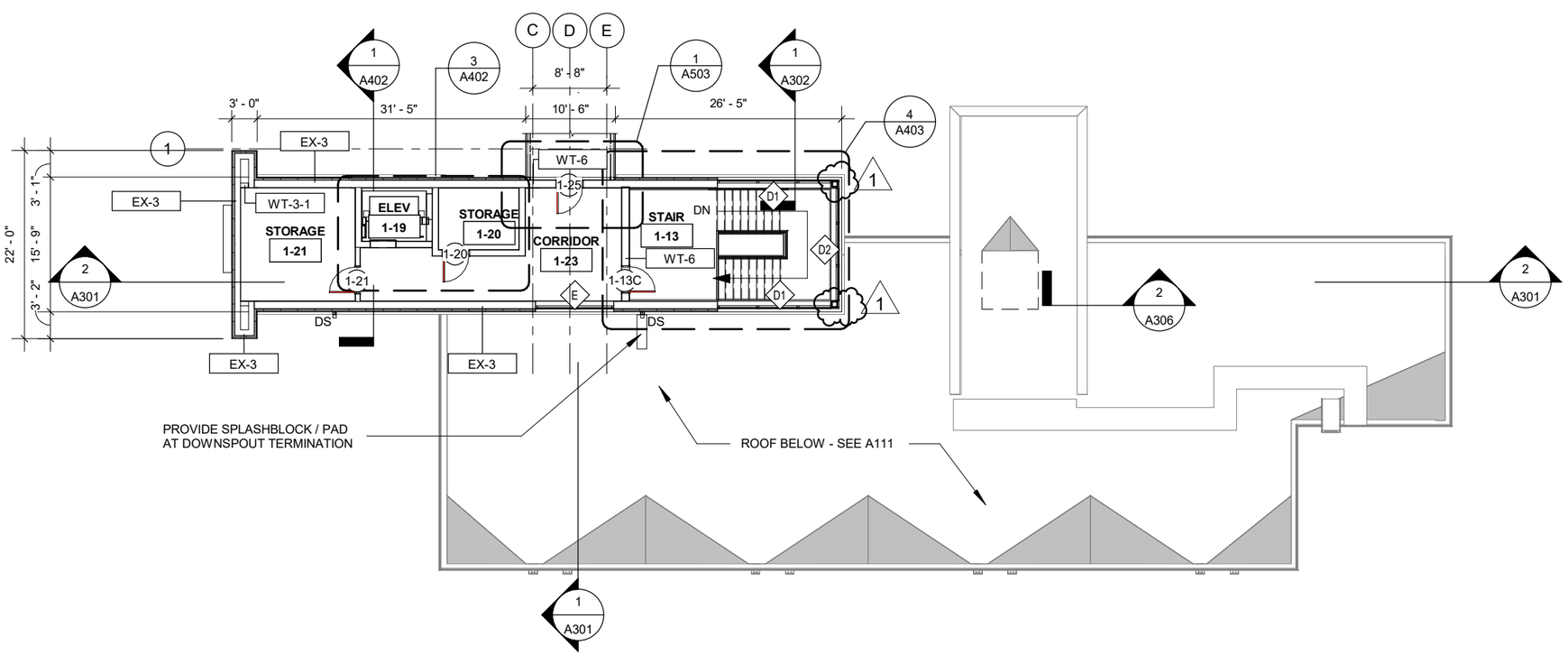

1 MAIN UTILITY BUILDING SECOND FLOOR PLAN

A105

SCALE: 1/16" = 1'-0"

GENERAL NOTES

1. DIMENSIONS SHOWN ARE TO FACE OF STUD / FURRING OR FACE OF C.M.U. UNLESS NOTED OTHERWISE
2. REFER TO DRAWINGS A801 AND A802 FOR WALL TYPE DESCRIPTIONS AND DETAILS
3. ALL GYPSUM BOARD EDGES SHALL BE LOCATED ON A SUPPORT
4. REFER TO SHEET G003 AND G004 FOR LOCATION OF FIRE RATED WALLS.
5. FURNISHINGS AND EQUIPMENT BY OWNER ARE NOTED AS N.I.C. OR SHOWN DASHED. REFER TO A701.
6. REFER TO SHEET A605 FOR FINISH SCHEDULE AND INFORMATION.
7. TB INDICATES WALL-MOUNTED TACK BOARD, BOTTOM OF BOARD AT +42" A.F.F.

GRAPHIC SCALE

0 8' 16' 32'

DESIGN AGENCY
PRIME AE
540 White Pond Drive, Ste. E
Akron, Ohio 44320
(330)-864-7755

NO.	REVISIONS	BY	DATE
1	ADDENDUM 1		7/7/2020

DESIGNED MWM
DRAWN MAK
CHECKED MWM
IN CHARGE CAR

LUCAS COUNTY

SECOND FLOOR PLAN

TOLL PLAZA 49

PROJECT 58-20-01
DATE: 6/15/2020

A105

OHIO TURNPIKE AND INFRASTRUCTURE COMMISSION

OHIO TURNPIKE

7/7/2020 10:21:28 AM

TOLL PLAZA 49

EXTERIOR MATERIAL LEGEND

MP-1	CLEAR ANODIZED METAL PANEL
MP-2	BRONZE ANODIZED METAL PANEL
MP-3	CUSTOM GREEN METAL PANEL
GL-1	ALUMINUM WINDOW W/ LOW E , TINTED INSULATED GLASS
CMU-1	BURNISHED CMU VENEER
CONC	CAST CONCRETE
X	DENOTES WINDOW TYPE - SEE A604
CJ	DENOTES MASONRY CONTROL JOINT

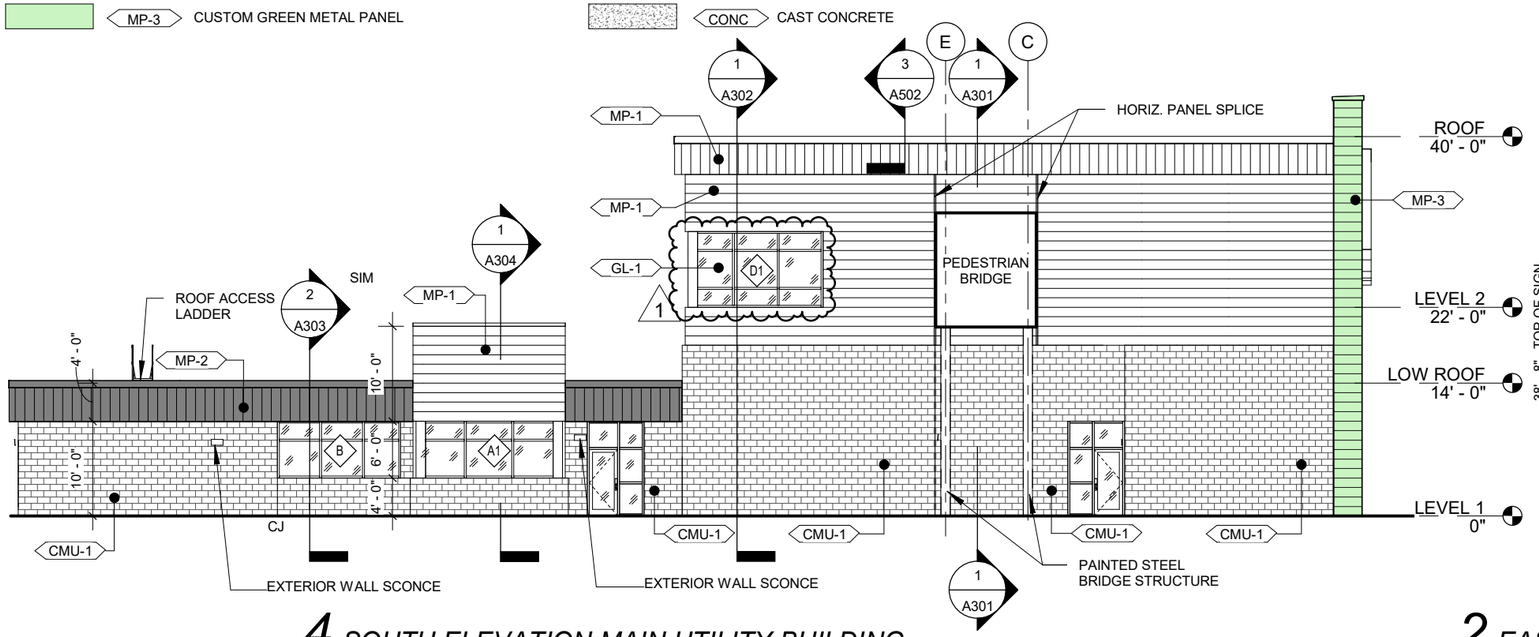

4 SOUTH ELEVATION MAIN UTILITY BUILDING

A202 SCALE: 1/16" = 1'-0"

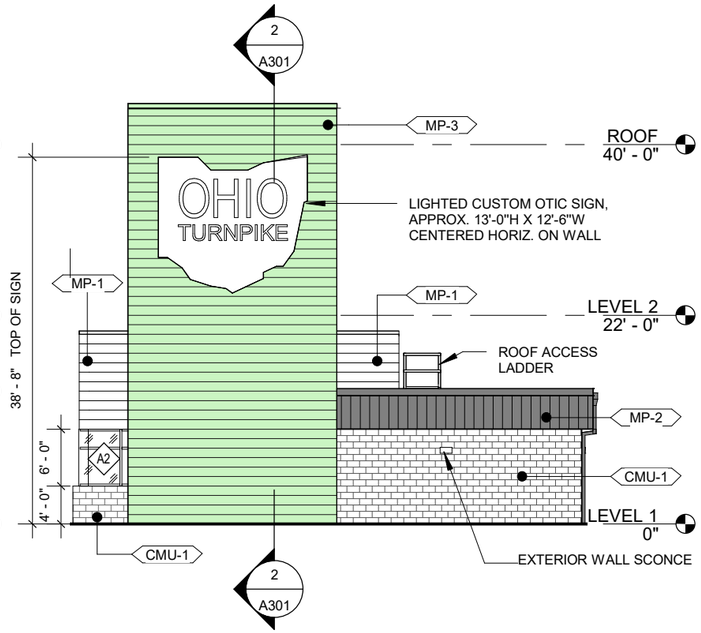

2 EAST ELEVATION MAIN UTILITY BUILDING

A202 SCALE: 1/16" = 1'-0"

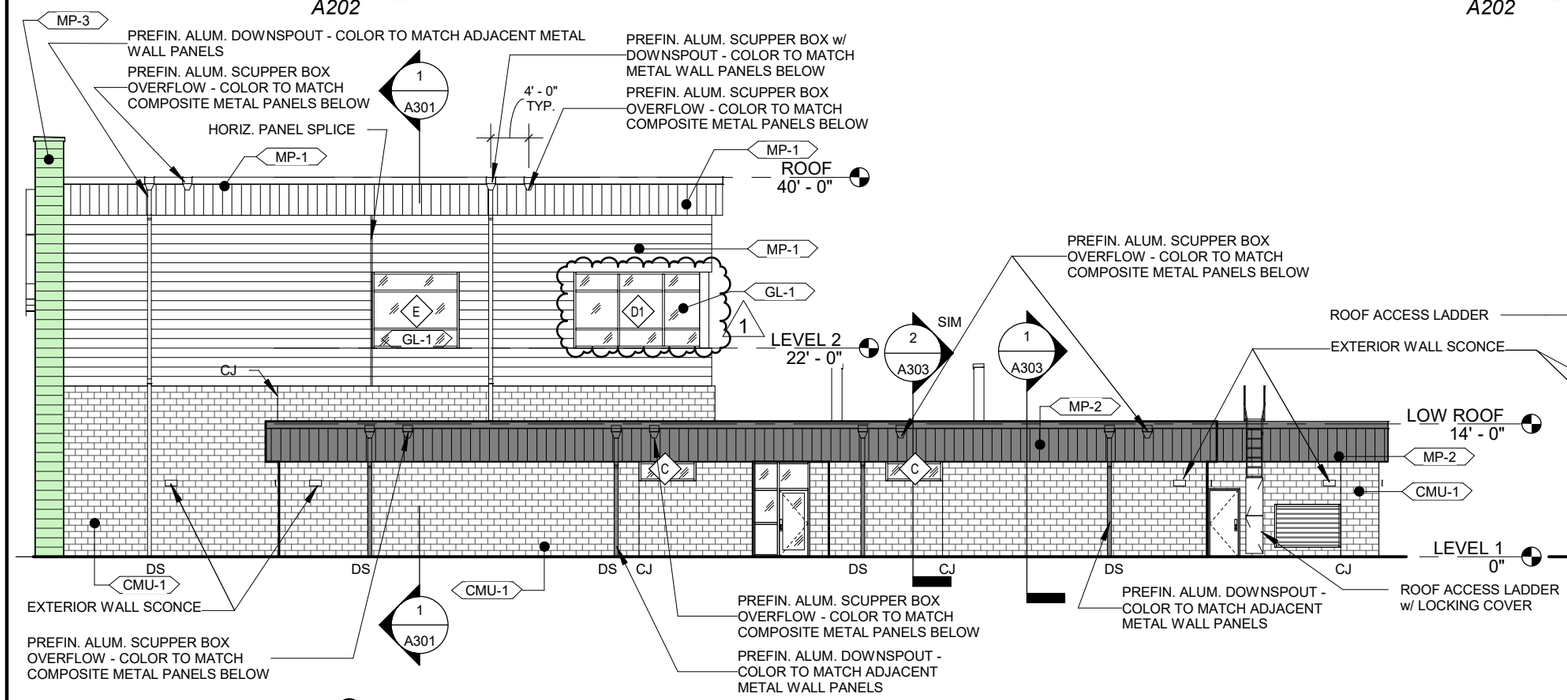

3 NORTH ELEVATION MAIN UTILITY BUILDING

A202 SCALE: 1/16" = 1'-0"

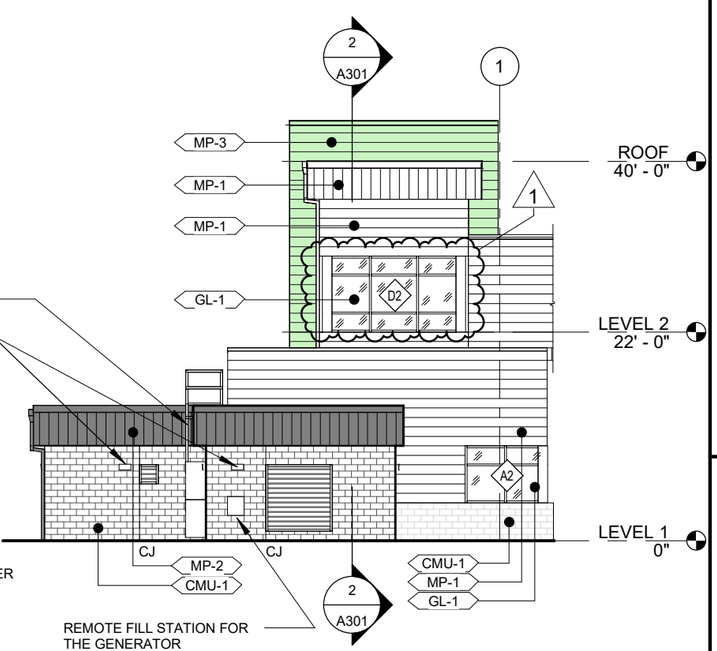

1 WEST ELEVATION MAIN UTILITY BUILDING

A202 SCALE: 1/16" = 1'-0"

COORDINATE ALL FINISH FLOOR ELEVATIONS WITH CIVIL DRAWINGS
ELEVATIONS NOTED ON THIS SHEET USE 0'-0" FOR FIRST FLOOR ELEVATION

GRAPHIC SCALE 0' 16' 32'

DESIGN AGENCY
PRIME AE
540 White Pond Drive, Ste. E
Akron, Ohio 44320
(330)-864-7755

NO.	REVISIONS	BY	DATE
1	ADDENDUM 1		7/7/2020

DESIGNED MWM | DRAWN MAK | CHECKED MWM | IN CHARGE CAR

ELEVATION MAIN BUILDING
LUCAS COUNTY
TOLL PLAZA 49

PROJECT 58-20-01
DATE: 6/15/2020

A202

77 / 221

OHIO TURNPIKE AND INFRASTRUCTURE COMMISSION

7/7/2020 10:18:14 AM

TOLL PLAZA 49

EXTERIOR MATERIAL LEGEND

MP-1	CLEAR ANODIZED METAL PANEL	GL-1	ALUMINUM WINDOW W/ LOW E , TINTED INSULATED GLASS
MP-2	BRONZE ANODIZED METAL PANEL	CMU-1	BURNISHED CMU VENEER
MP-3	CUSTOM GREEN METAL PANEL	CONC	CAST CONCRETE

X — DENOTES WINDOW TYPE - SEE A604

CJ — DENOTES MASONRY CONTROL JOINT

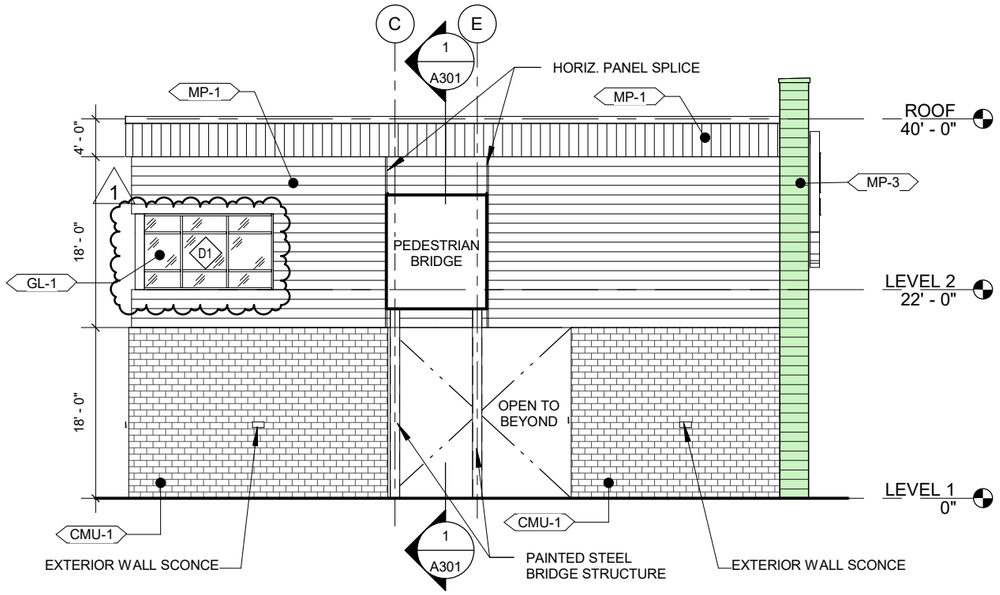

4 NORTH ELEVATION SECONDARY UTILITY BUILDING

A203 SCALE: 1/16" = 1'-0"

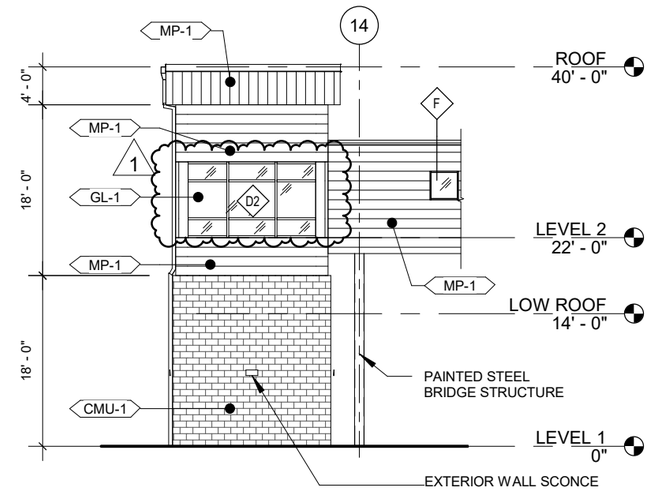

2 EAST ELEVATION SECONDARY UTILITY BUILDING

A203 SCALE: 1/16" = 1'-0"

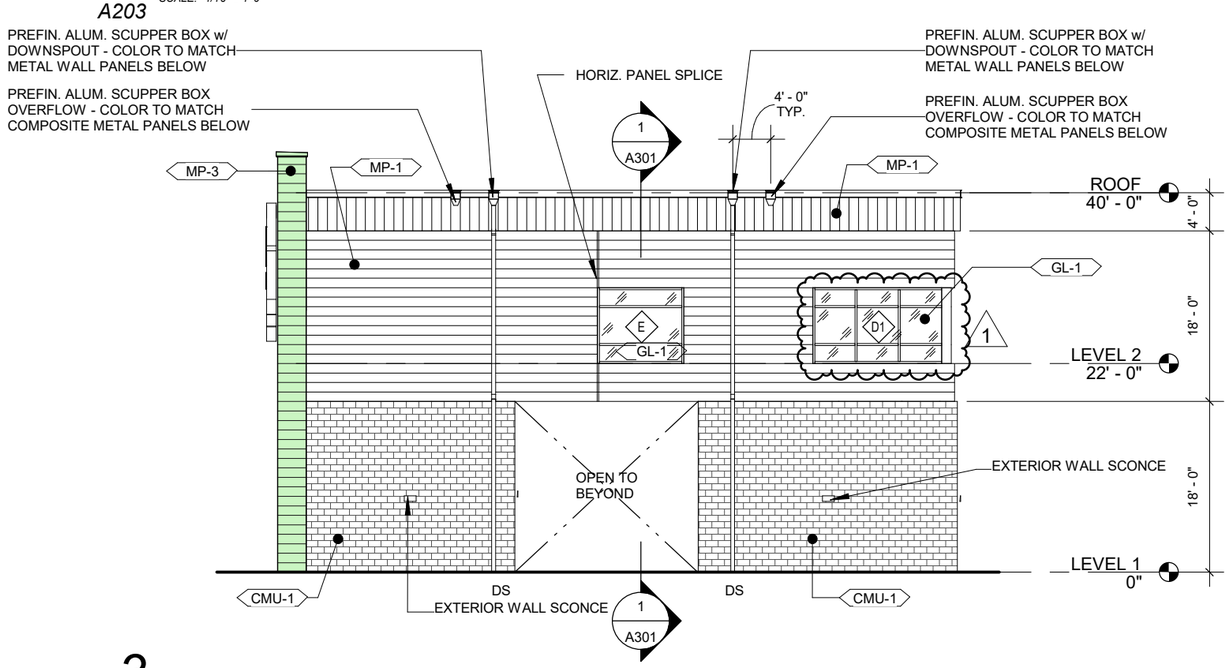

3 SOUTH ELEVATION SECONDARY UTILITY BUILDING

A203 SCALE: 1/16" = 1'-0"

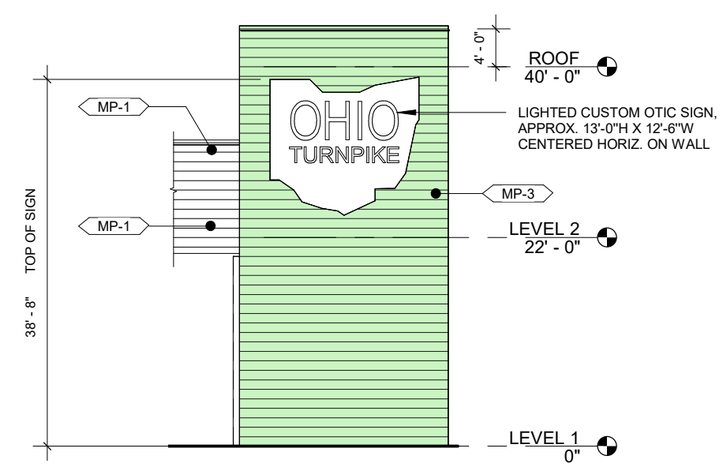

1 WEST ELEVATION SECONDARY UTILITY BUILDING

A203 SCALE: 1/16" = 1'-0"

COORDINATE ALL FINISH FLOOR ELEVATIONS WITH CIVIL DRAWINGS
ELEVATIONS NOTED ON THIS SHEET USE 0'-0" FOR FIRST FLOOR ELEVATION

GRAPHIC SCALE 0' 16' 32'

DESIGN AGENCY
PRIME AE
540 White Pond Drive, Ste. E
Akron, Ohio 44320
(330)-864-7755

NO.	REVISIONS	BY	DATE
1	ADDENDUM 1		7/7/2020

DESIGNED MWM | CHECKED MWM | IN CHARGE CAR | DRAWN MAK

ELEVATION SECONDARY BUILDING
TOLL PLAZA 49
LUCAS COUNTY

PROJECT 58-20-01
DATE: 6/15/2020

A203

78 / 221

OHIO TURNPIKE AND INFRASTRUCTURE COMMISSION

7/7/2020 10:15:18 AM

TOLL PLAZA 49

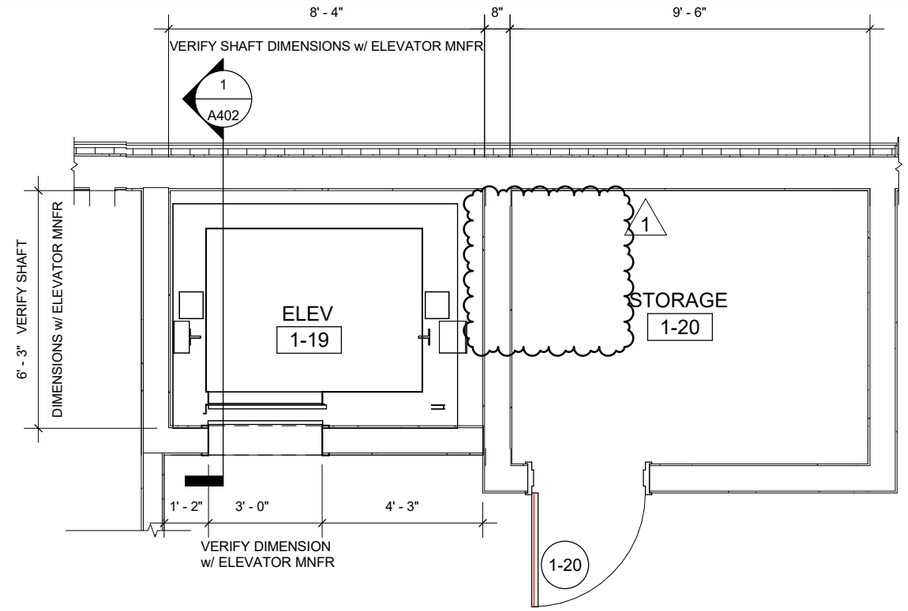

3 MAIN UTILITY BUILDING ELEVATOR PLAN - SECOND FLOOR

A402 SCALE: 1/4" = 1'-0"

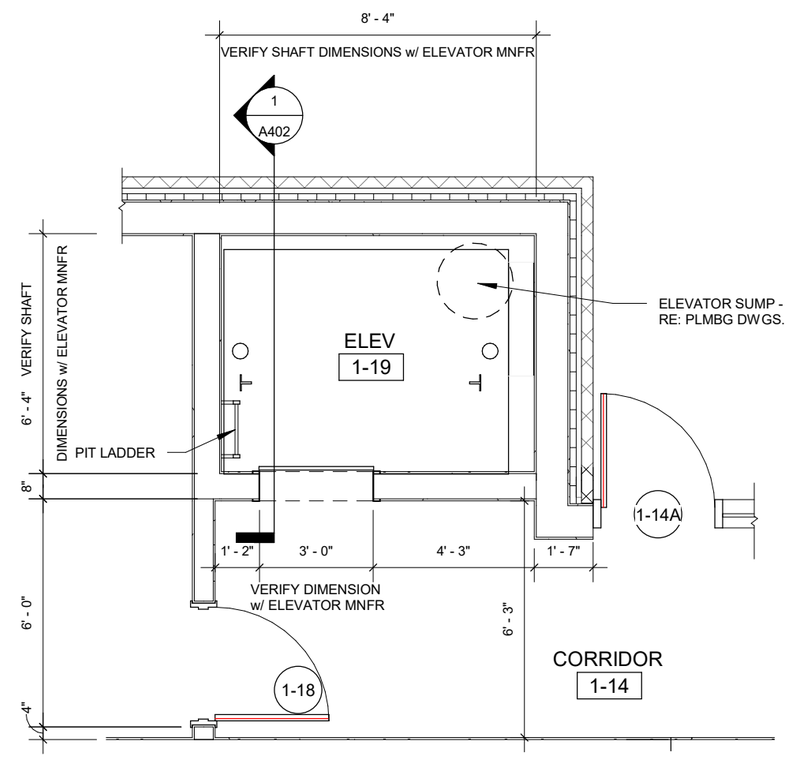

2 MAIN UTILITY BUILDING ELEVATOR PLAN - FIRST FLOOR

A402 SCALE: 1/4" = 1'-0"

GRAPHIC SCALE 0 2' 4' 8'

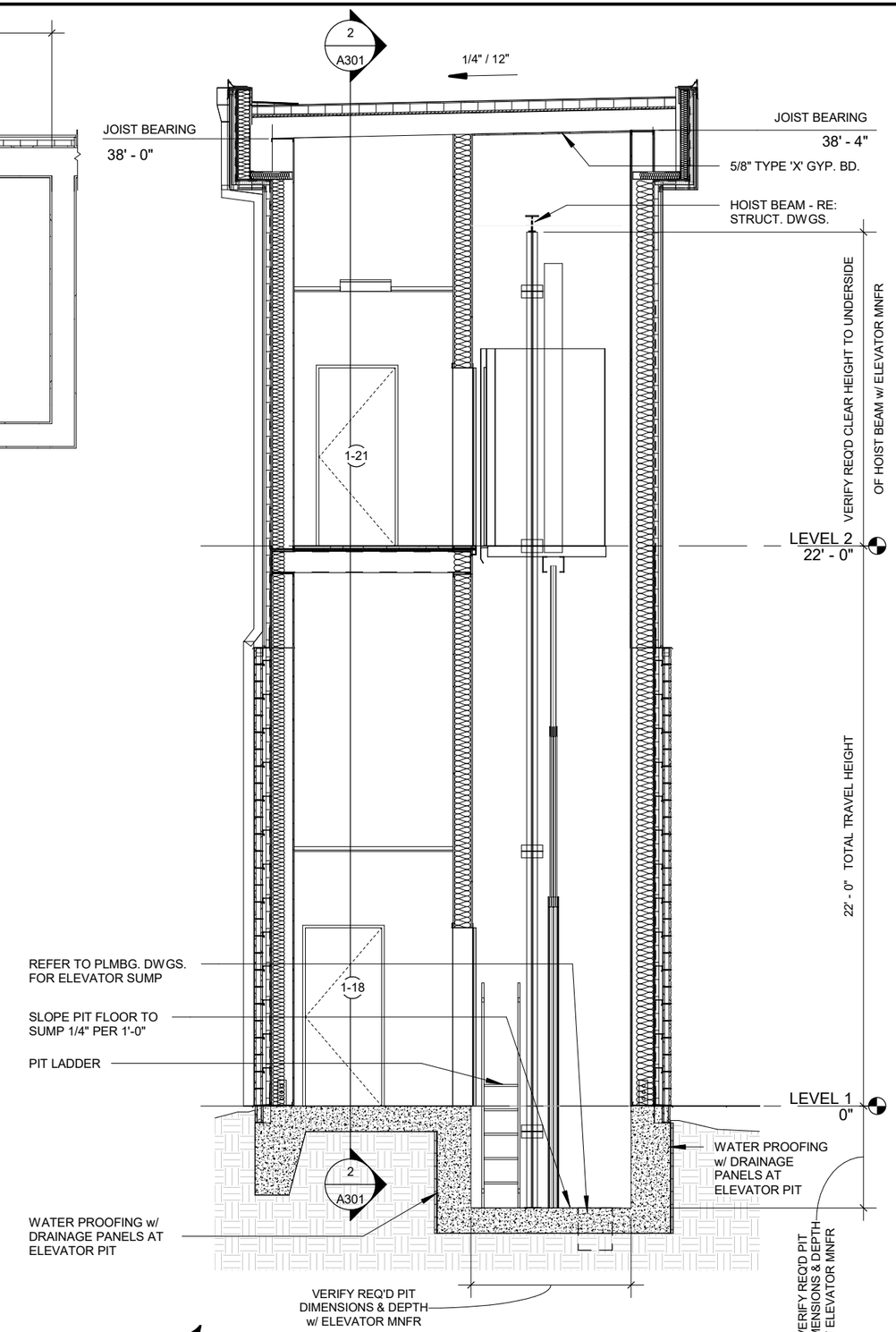

1 ELEVATOR SECTION - MAIN UTILITY BDLG

A402 SCALE: 3/16" = 1'-0"

GRAPHIC SCALE 0 4' 8' 16'

DESIGN AGENCY
PRIME AE
540 White Pond Drive, Ste. E
Akron, Ohio 44320
(330)-864-7755

NO.	REVISIONS	BY	DATE
1	ADDENDUM 1		7/7/2020

DESIGNED MWM
DRAWN MAK
CHECKED MWM
IN CHARGE CAR

ELEVATOR PLAN AND SECTIONS

TOLL PLAZA 49 LUCAS COUNTY

PROJECT 58-20-01
DATE: 6/15/2020

A402

89
221

OHIO TURNPIKE

OHIO TURNPIKE AND INFRASTRUCTURE COMMISSION

TOLL PLAZA 49 7/7/2020 10:11:16 AM

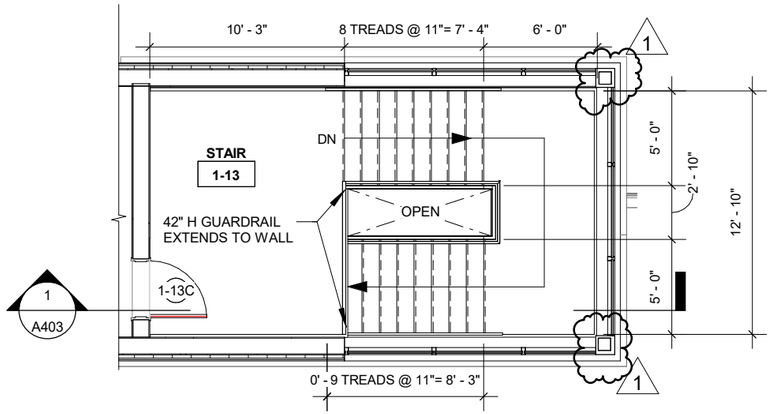

4 MAIN UTILITY BUILDING STAIR SECOND FLOOR PLAN

A403 SCALE: 1/8" = 1'-0"

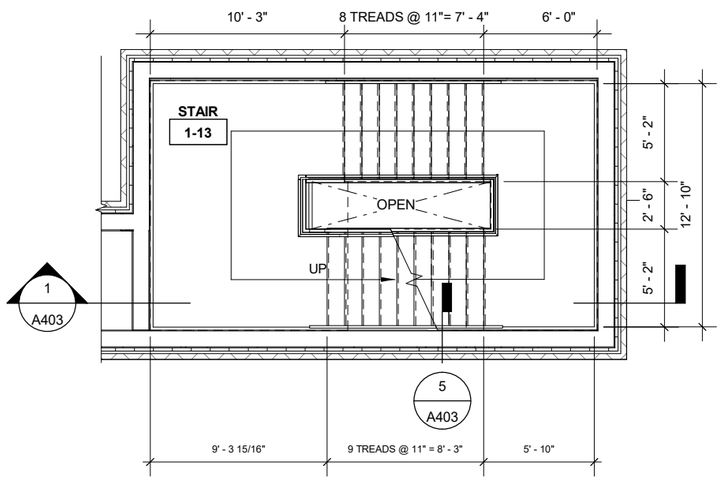

3 MAIN UTILITY BUILDING STAIR LANDING PLAN

A403 SCALE: 1/8" = 1'-0"

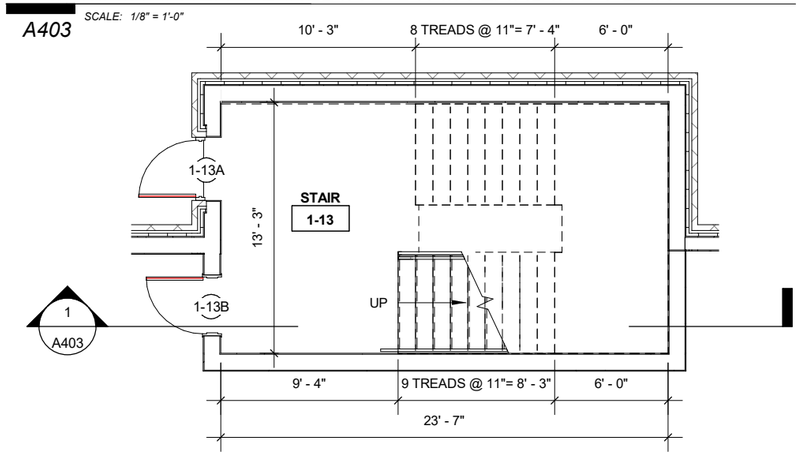

2 MAIN UTILITY BUILDING STAIR FIRST FLOOR PLAN

A403 SCALE: 1/8" = 1'-0"

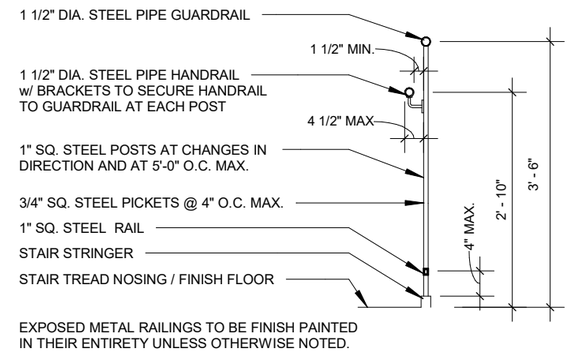

GUARDRAIL @ STRINGER w/ STEEL HANDRAIL

6 DETAIL

A403 SCALE: 1/2" = 1'-0"

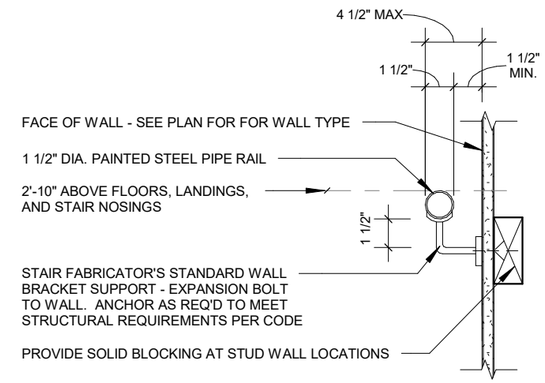

HANDRAIL @ STUD / FURRED WALL

5 DETAIL

A403 SCALE: 1 1/2" = 1'-0"

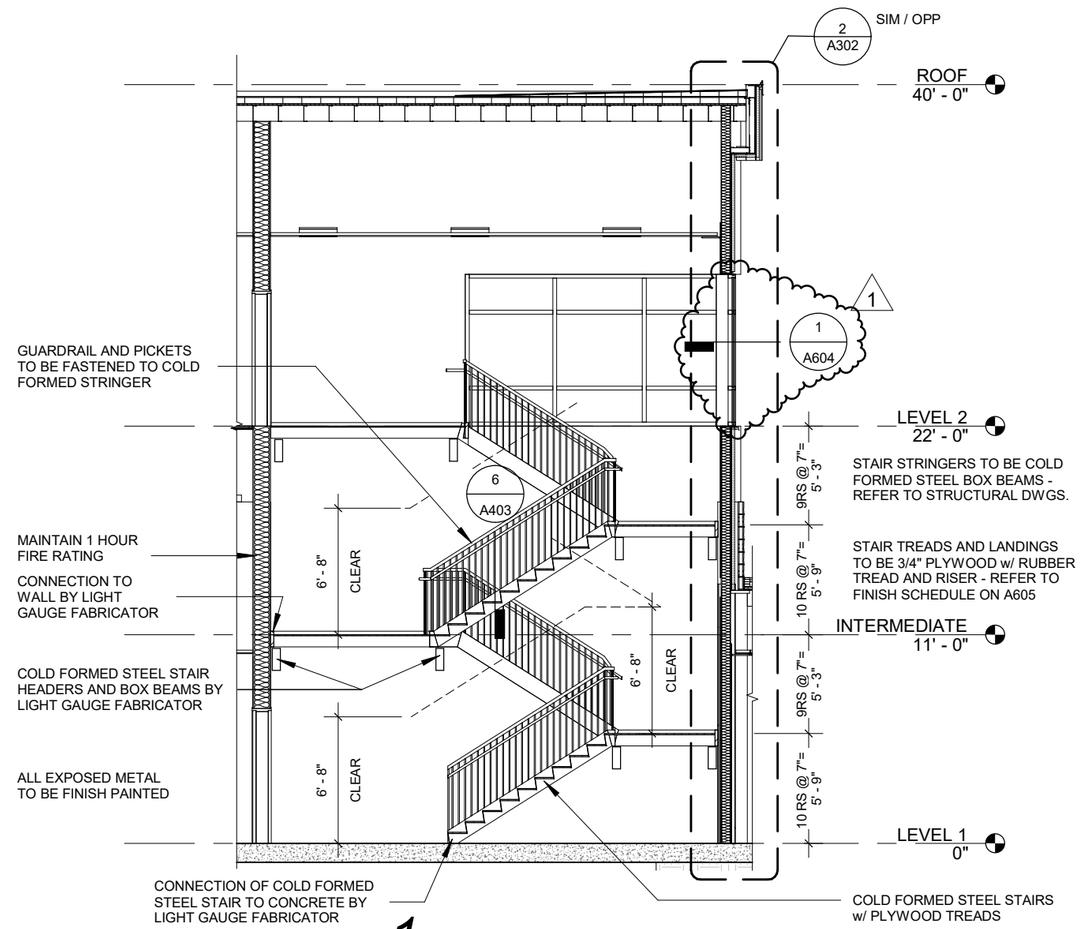

1 STAIR SECTION

A403 SCALE: 1/8" = 1'-0"

GRAPHIC SCALE

0' 16' 32'

DESIGN AGENCY
PRIME AE
540 White Pond Drive, Ste. E
Akron, Ohio 44320
(330)-864-7755

NO.	REVISIONS	BY	DATE
1	ADDENDUM 1		7/7/2020

DESIGNED MWM | CHECKED MWM | DRAWN MAK | IN CHARGE CAR

STAIRS PLAN AND SECTION

TOLL PLAZA 49 — LUCAS COUNTY

PROJECT 58-20-01
DATE: 6/15/2020

A403

90 / 221

OHIO TURNPIKE AND INFRASTRUCTURE COMMISSION

OHIO TURNPIKE

7/7/2020 10:50:44 AM

TOLL PLAZA 49

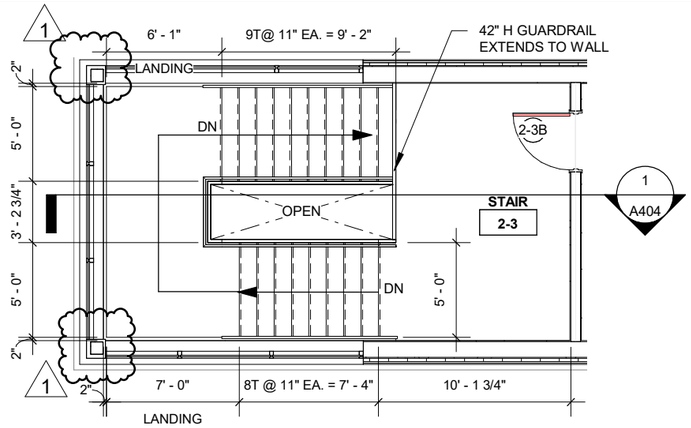

4 STAIR 2-3 SECOND FLOOR PLAN

A404 SCALE: 1/8" = 1'-0"

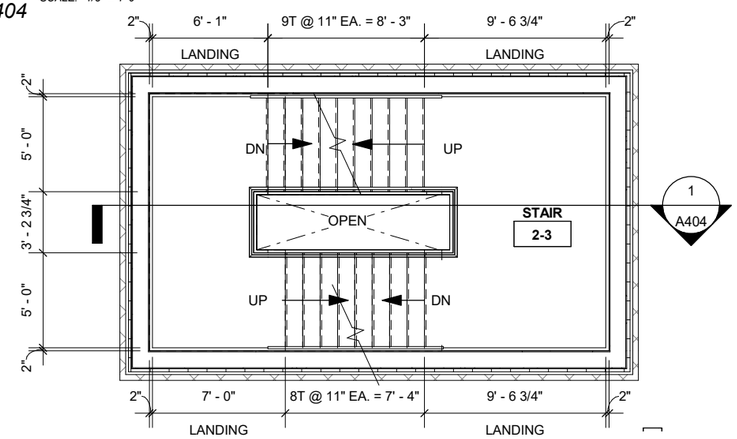

3 STAIR 2-3 LANDING FLOOR PLAN

A404 SCALE: 1/8" = 1'-0"

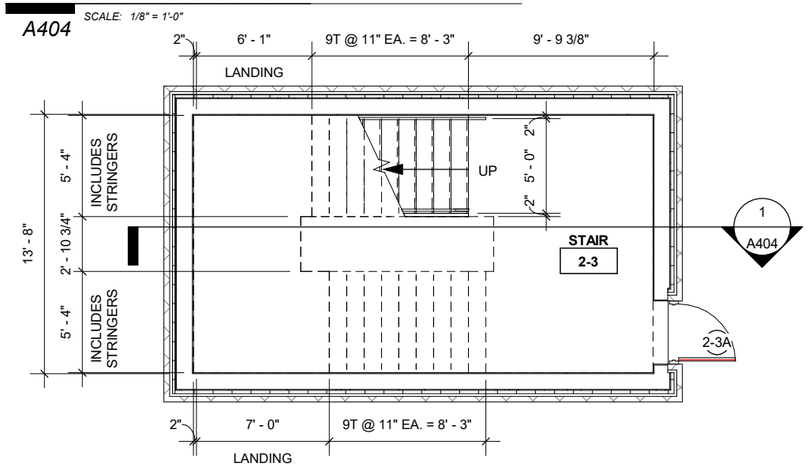

2 STAIR 2-3 FIRST FLOOR PLAN

A404 SCALE: 1/8" = 1'-0"

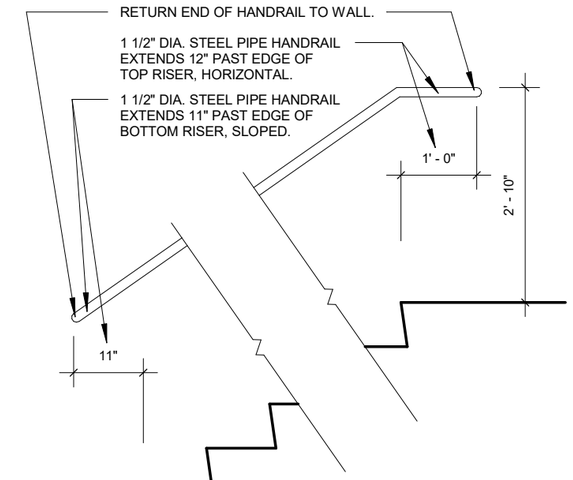

. RAILING ENDS DETAIL

A404 SCALE: 1/2" = 1'-0"

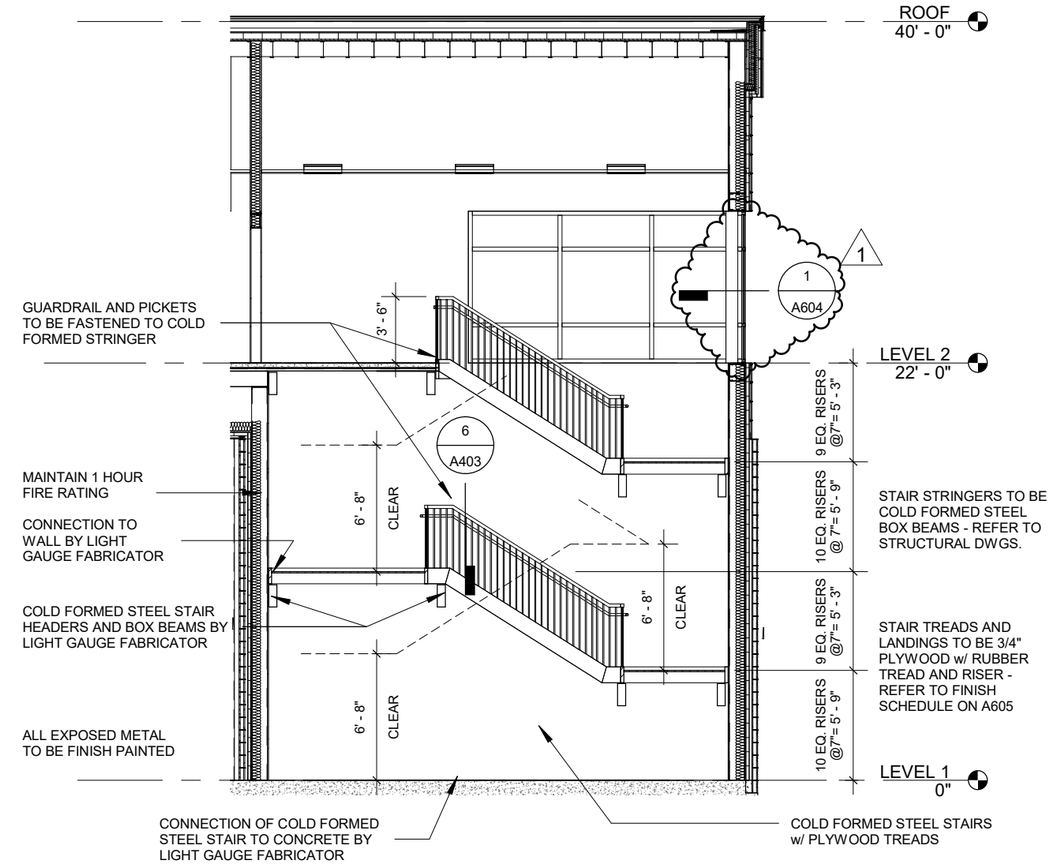

1 STAIR SECTION

A404 SCALE: 1/8" = 1'-0"

GRAPHIC SCALE
0' 16' 32'

DESIGN AGENCY
PRIME AE
540 White Pond Drive, Ste. E
Akron, Ohio 44320
(330)-864-7755

NO.	REVISIONS	BY	DATE
1	ADDENDUM 1		7/7/2020

DESIGNED MWM
DRAWN MAK
CHECKED MWM
IN CHARGE CAR

STAIR PLANS AND SECTIONS
TOLL PLAZA 49
LUCAS COUNTY

PROJECT 58-20-01
DATE: 6/15/2020

A404

91
221

OHIO TURNPIKE AND INFRASTRUCTURE COMMISSION

TOLL PLAZA 49 7/7/2020 10:55:31 AM

DOOR AND FRAME SCHEDULE

DOOR NUMBER	ROOM NAME	DOOR TYPE	DOOR SIZE PANEL WIDTH	DOOR SIZE HEIGHT	DOOR SIZE THICKNESS	DOOR MATERIAL	DOOR GLAZING	FRAME TYPE	FRAME MATERIAL	DETAIL/ SHEET (A602/A603) HEAD	JAMB	THRESHOLD	RATINGS FIRE	HARDWARE SET	COMMENTS
1-1	WOMEN	A	3' - 0"	7' - 0"	2"	HM		F1	HM	2/A602	1/A602	2/A603		A	
1-2	MEN	A	3' - 0"	7' - 0"	2"	HM		F1	HM	2/A602	1/A602	2/A603		A	
1-3A	LOCKERS	A	3' - 0"	7' - 0"	2"	HM		F1	HM	2/A602	1/A602	-		A	
1-3B	LOCKERS	A	3' - 0"	7' - 0"	2"	HM		F1	HM	2/A602	1/A602	-		B	
1-3C	LOCKERS	A	3' - 0"	7' - 0"	2"	HM		F1	HM	2/A602	1/A602	-		B	
1-4	SAFE	A	3' - 0"	7' - 0"	2"	HM		F1	HM	2/A602	1/A602	-		B	
1-5	WORK ROOM	A	3' - 0"	7' - 0"	2"	HM		F1	HM	2/A602	1/A602	-		B	
1-6	COMMUNICATION ROOM	A	3' - 0"	7' - 0"	2"	HM		F1	HM	2/A602	1/A602	-		B	
1-7A	OFFICE	A	3' - 0"	7' - 0"	2"	HM		F1	HM	2/A602	1/A602	-		C	
1-7B	OFFICE	A	3' - 0"	7' - 0"	2"	HM		F1	HM	2/A602	1/A602	-		B	
1-8	ELECTRICAL	A	3' - 0"	7' - 0"	2"	HM		F1	HM	2/A602	1/A602	3/A603	1.5 HR	B	SPECIAL KEY
1-9	BREAK	D	3' - 0"	7' - 0"	2"	HM		F1	HM	2/A602	1/A602	-		A	
1-9A	WATER SERVICE	A	3' - 0"	7' - 0"	2"	HM		F1	HM	2/A602	1/A602	-		B	
1-10	OFFICE	D	3' - 0"	7' - 0"	2"	HM		F1	HM	2/A602	1/A602	-		C	
1-11A	GENERATOR	A	3' - 0"	7' - 0"	2"	HM		F1	HM	2/A602	1/A602	-	1.5 HR	D	INSULATED
1-11B	GENERATOR	A	3' - 0"	7' - 0"	2"	HM		F1	HM	6/A602	5/A602	1/A603		F	
1-12	JAN.	A	3' - 0"	7' - 0"	2"	HM		F1	HM	2/A602	1/A602	3/A603		B	
1-13A	STAIR	A	3' - 0"	7' - 0"	2"	HM		F1	HM	6/A602	5/A602	1/A603		F	
1-13B	STAIR	A	3' - 0"	7' - 0"	2"	HM		F1	HM	2/A602	1/A602	-	1 HR	G	
1-13C	STAIR	A	3' - 0"	7' - 0"	2"	HM		F1	HM	2/A602	1/A602	-	1 HR	G	
1-14A	CORRIDOR	B	3' - 0"	7' - 0"	2"	ALUM	YES	F2	ALUM	4/A602	3/A602	1/A603		H	
1-14B	CORRIDOR	C	3' - 0"	7' - 0"	2"	ALUM	YES	F2	ALUM	4/A602	3/A602	1/A603		H	
1-14C	CORRIDOR	B	3' - 0"	7' - 0"	2"	ALUM	YES	F2	ALUM	4/A602	3/A602	1/A603		H	
1-18	STORAGE	A	3' - 0"	7' - 0"	2"	HM		F1	HM	2/A602	1/A602	3/A603		B	
1-20	STORAGE	A	3' - 0"	7' - 0"	2"	HM		F1	HM	2/A602	1/A602	-		B	UNDERCUT DOOR - REFER TO SHEET M-104
1-21	STORAGE	A	3' - 0"	7' - 0"	2"	HM		F1	HM	2/A602	1/A602	-		B	UNDERCUT DOOR - REFER TO SHEET M-104
1-25	PEDESTRIAN BRIDGE	D	3' - 0"	7' - 0"	2"	HM		F1	HM	2/A602	1/A602	3/A603		I	INSULATED
2-1	STORAGE	A	3' - 0"	7' - 0"	2"	HM		F1	HM	2/A602	1/A602	3/A603		B	
2-3A	STAIR	A	3' - 0"	7' - 0"	2"	HM		F1	HM	6/A602	5/A602	1/A603		K	
2-3B	STAIR	A	3' - 0"	7' - 0"	2"	HM		F1	HM	2/A602	1/A602	-	1 HR	F	
2-4	CORRIDOR	A	3' - 0"	7' - 0"	2"	HM		F1	HM	6/A602	5/A602	1/A603		K	
2-7	STORAGE	A	3' - 0"	7' - 0"	2"	HM		F1	HM	2/A602	1/A602	-		D	UNDERCUT DOOR - REFER TO SHEET M-104
2-8	COMM	A	3' - 0"	7' - 0"	2"	HM		F1	HM	2/A602	1/A602	-		B	SPECIAL KEY
2-10	PEDESTRIAN BRIDGE	D	3' - 0"	7' - 0"	2"	HM		F1	HM	2/A602	1/A602	3/A603		I	INSULATED

1

DOOR TYPE

ALUM ALUMINUM w/ FULL GLASS
HM HOLLOW METAL w/ INSULATED CORES

FRAME MATERIAL

ALUM ALUMINUM
HM HOLLOW METAL

NOTE:
EXTERIOR HOLLOW METAL DOORS & FRAMES TO BE GALVANIZED.
REFER TO SHEET M-104 FOR UNDERCUT DOOR LOCATIONS/REQUIREMENTS.
EXTERIOR HOLLOW METAL DOORS & FRAMES TO BE INSULATED.

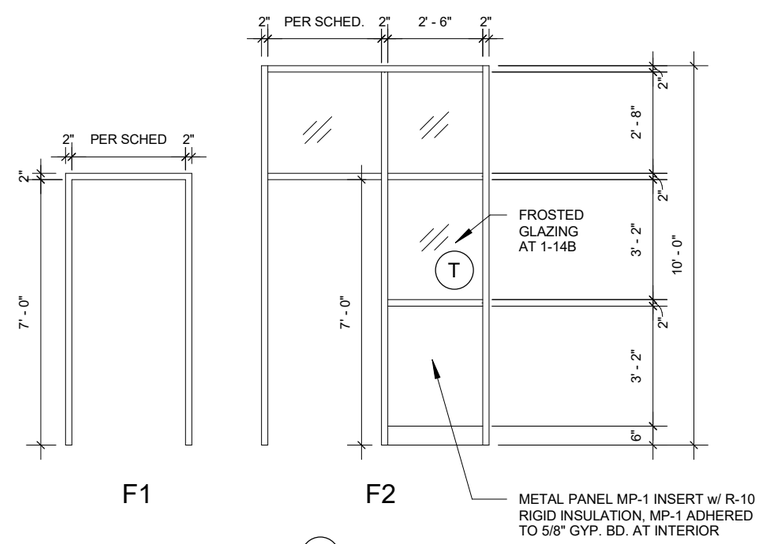

T = TEMPERED SAFETY GLAZING

FRAME TYPES
SCALE: 1/4" = 1'-0"

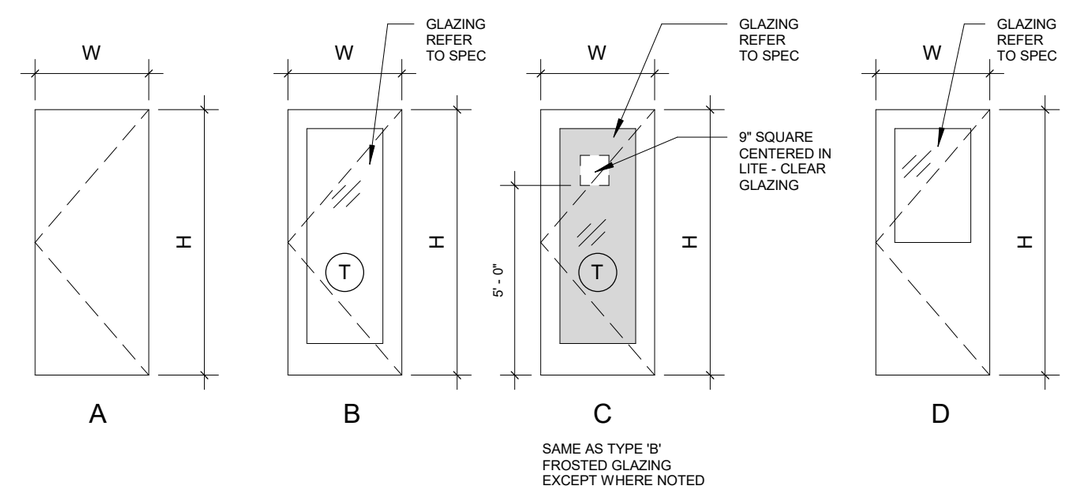

DOOR TYPES
SCALE: 1/4" = 1'-0"

DESIGN AGENCY
PRIME AE
540 White Pond Drive, Ste. E
Akron, Ohio 44320
(330)-864-7755

NO.	REVISIONS	BY	DATE
1	ADDENDUM 1		7/7/2020

DESIGNED MWM
DRAWN MAK
CHECKED MWM
IN CHARGE CAR

LUCAS COUNTY

DOOR SCHEDULE

TOLL PLAZA 49

PROJECT 58-20-01
DATE: 6/15/2020

A601

104
221

OHIO TURNPIKE AND INFRASTRUCTURE COMMISSION

OHIO TURNPIKE

TOLL PLAZA 49 7/7/2020 10:01:49 AM

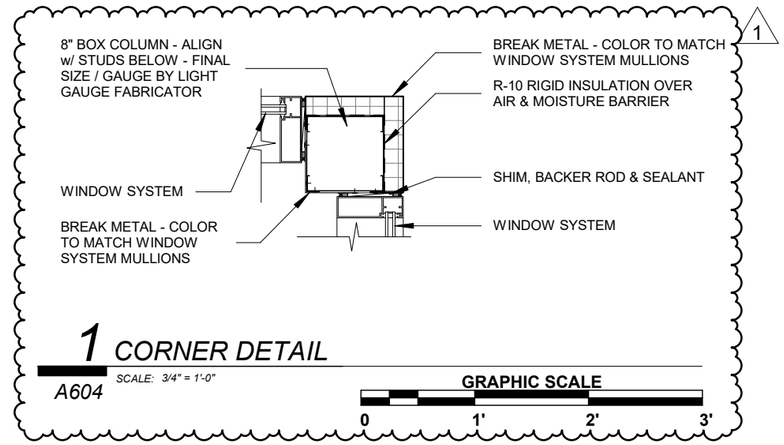

GENERAL NOTES - STOREFRONT

1. ALL EXTERIOR WINDOWS TO HAVE SOLID SURFACE SILL AT INTERIOR
2. GLAZING LOCATED WITHIN 24" OF EITHER SIDE OF A DOOR AND WITHIN 60" OF THE WALKING SURFACE MUST BE TEMPERED
3. GLAZING WITHIN ALL DOORS MUST BE TEMPERED

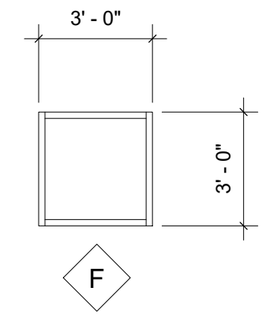

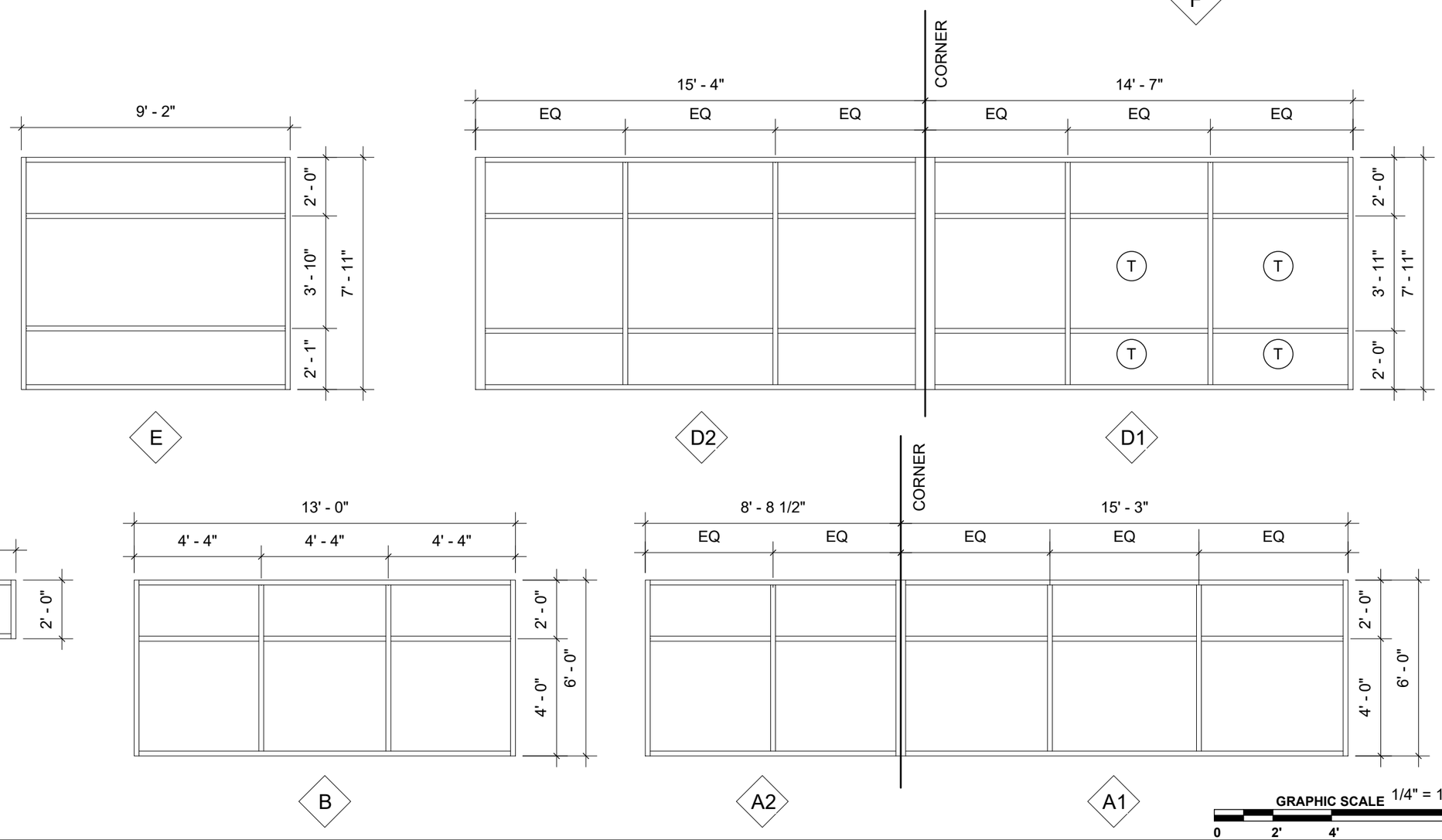

DESIGN AGENCY
PRIME AE
540 White Pond Drive, Ste. E
Akron, Ohio 44320
(330)-864-7755

NO.	REVISIONS	BY	DATE
1	ADDENDUM 1		7/7/2020

DESIGNED MWM
DRAWN MAK
CHECKED MWM
IN CHARGE CAR

STOREFRONT & WINDOW LEGEND

TOLL PLAZA 49
LUCAS COUNTY

PROJECT 58-20-01
DATE: 6/15/2020

A604

107
221

OHIO TURNPIKE AND INFRASTRUCTURE COMMISSION

OHIO TURNPIKE

TOLL PLAZA 49 7/7/2020 9:51:56 AM