LIGHTING FIXTURE SCHEDULE

TYPE	WATTAGE LAMP	WATTAGE FIXT'R	DESCRIPTION	CATALOG NUMBER
SA (1)	1-400 MH	480	METAL HALIDE LUMINARE, DIE-CAST ALUMINUM HOUSING, RECTANGULAR ARCHITECTURAL SHAPE WITH MOUNTING ARM, CONTOURED CLEAR GLASS LENS, HINGED BALLAST TRAY, VERTICAL BURN, TYPE III DISTRIBUTION, BLACK FINISH, MOUNTED ON 45'-0" ALUMINUM POLE WITH BREAKAWAY BASE, AND 480V. HPF BALLAST.	LSI LIGHTING CHALLENGER #CHV-3-400-PSMV-CT-480V-BLK
SB (1)	1-1000 MH	1105	SAME AS FIXTURE TYPE "SA", EXCEPT 1000 WATT LAMP.	LSI LIGHTING CHALLENGER #CHV-3-1000-MHR-CT-480V-BLK
SB1 (1)	1-1000 MH	1105	SAME AS FIXTURE TYPE "SB", EXCEPT WITH HOUSE SIDE CUT OFF SHIELD.	LSI LIGHTING CHALLENGER #CHV-3-1000-MHR-CT-480V-143587BLK-BLK
SC (1)	2-1000 MH	2210	SAME AS FIXTURE TYPE "SB", EXCEPT TWO (2) FIXTURES PER POLE.	LSI LIGHTING CHALLENGER (2) #CHV-3-1000-MHR-CT-480V-BLK
SC1 (1)	2-1000 MH	2210	SAME AS FIXTURE TYPE "SC", EXCEPT BASE SHALL BE 30" ABOVE GRADE.	LSI LIGHTING CHALLENGER (2) #CHV-3-1000-MHR-CT-480V-BLK
SD (1)	2-1000 MH	2210	SAME AS FIXTURE TYPE "SC", EXCEPT WITH TYPE 5 OPTICS AND MOUNTED ON 39'-0" ALUMINUM POLE WITHOUT BREAKAWAY BASE, AND BASE SHALL BE 60" ABOVE GRADE.	LSI LIGHTING CHALLENGER (2) #CHV-5-1000-MHR-CT-480V-BLK
SFP (1)	1-100 MH	315 OPEN CIRCUIT	METAL HALIDE INGROUND 12" ROUND FIXTURE, WITH CAST ALUMINUM HOUSING, 10° TILT FLAT LENS, SPOT REFLECTOR, AND 277V HPF BALLAST.	HYDREL #9100-A-MH100-277V-TSP-34
SG (1)	1-100 MH	315 OPEN CIRCUIT	METAL HALIDE BOLLARD, 8" ROUND WITH ALUMINUM TOP CAP, LOUVER, AND SHAFT, 42" HIGH, WET LABEL, VANDAL RESISTANT, BLACK FINISH, AND 277V HPF BALLAST.	KIM #VRB1-100MH277-BL-P

GENERAL LIGHTING FIXTURE SCHEDULE NOTES:

1. REFER TO SPECIFICATIONS FOR BALLAST AND LAMP REQUIREMENTS.
2. SEE DRAWING E8 FOR BASE DETAILS.
3. VERIFY FINISHES WITH ARCHITECT PRIOR TO ORDERING.

NOTES:

(1) VERIFY COLOR WITH ARCHITECT (BLACK OR TO MATCH OTHER SITES).

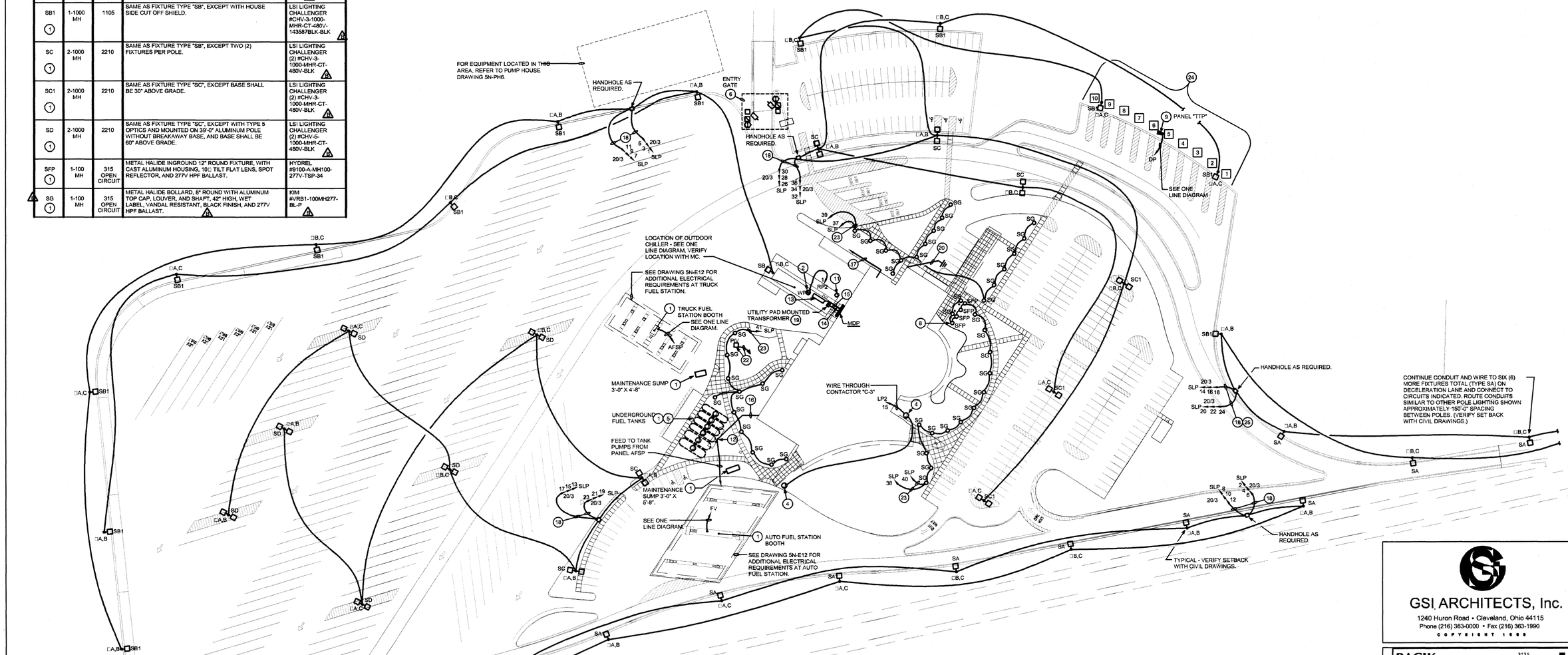

SITE ELECTRICAL PLAN - MIDDLE RIDGE (3)(7)

SCALE: 1" = 50'-0"

PLAN NOTES:

(1) RUN UNDERGROUND 1" CONDUITS FROM LEAK DETECTION PANEL TO TANK FARM AREA FOR SENSOR WIRING. ROUTE 1" CONDUIT FROM EACH MAINTENANCE SUMP LOCATION TO THE LEAK DETECTION PANEL FOR SENSOR WIRING. FOR EXACT QUANTITY OF CONDUITS AND LOCATIONS, SEE PIPING DRAWINGS.

(2) MOUNT WEATHERPROOF GFI RECEPTACLES NEXT TO HVAC EQUIPMENT AND ROUTE CONDUIT INSIDE BUILDING. SEE DETAIL ON DRAWING 5N-E8.

(3) ALL SITE POLE LIGHTING SHALL BE FED WITH DIRECT BURIAL CABLE IN SCHEDULE 40 PVC CONDUIT.

(4) RUN 2#10, 1#10G, 1" CONDUIT FROM ELECTRICAL PANEL "LP2", CIRCUIT 15, TO INGROUND WEATHERPROOF JUNCTION BOX FOR VENDOR SIGN. SEE CIVIL SITE PLAN FOR EXACT LOCATION.

(5) HAZARDOUS AREA (CLASS 1, DIVISION 1 AND 2 LOCATION) AROUND ABOVE GROUND TANK VENTS. PER N.E.C. ARTICLE 514. SEE FITTING DETAIL ON DRAWING 5N-E9.

(6) COMMUNICATION WIRING FOR CAMERA, CARD READER, AND INTERCOM SHALL BE RUN IN SEPARATE CONDUIT FROM POWER FOR GATE, CAMERA, CARD READER, AND INTERCOM. CONDUITS ARE SHOWN ON CIVIL SITE UTILITY PLAN. POWER WIRING SHALL BE 2#10, 1#10G, FED FROM PANEL "RP2", CIRCUIT 2. VERIFY EXACT NEMA 3R OUTLET BOX REQUIREMENTS AND EXACT LOCATIONS WITH ARCHITECT. PROVIDE PULLWIRES IN CONDUIT AS REQUIRED.

(7) ALL SITE CONDUIT TO BE ENCASED IN CONCRETE UNDER PAVED AREAS.

(8) LOCATE LIGHT FIXTURE TYPE "SFP" 5'-0" FROM FLAGPOLE IN A STRAIGHT LINE. REFER TO CIVIL DRAWINGS FOR EXACT LOCATION. (3 FLAGPOLES ARE IN BETWEEN FIXTURES.)

(9) TT SUBPANEL THROUGH SERVICE PAK POWER OUTLET PANEL, PEDESTAL MOUNTED - SQUARE D CATALOG #PAK75PG. RUN 3#2, 1#6G, 1-0" CONDUIT FROM PANEL "TTP" TO EACH SUBPANEL. SEE MANUFACTURER'S DETAIL.

(10) RADIATOR END OF GENERATOR MOUNTED TOWARD UTILITY TRANSFORMER WITH A DISTANCE OF 7'-0" BETWEEN THEM.

(11) PROVIDE AND INSTALL WEATHERPROOF INGROUND JUNCTION BOX APPROXIMATELY 25 FEET (25') FROM BUILDING IN GRASS FOR FUTURE TRASH COMPACTORS. RUN 2" EMPTY CONDUIT WITH PULLWIRE TO ELECTRICAL ROOM. STUB AND CAP BY CEILING.

(12) LOCATION OF TANK PUMP DISCONNECT SWITCHES (SIX (6) 240V, 30) MOUNTED ON UNISTRUT. SEE DRAWING 5N-E9 FOR DETAIL.

(13) DIESEL FUEL 500KW GENERATOR. SEE PLAN NOTE 10.

(14) EIGHT (8) 4" PVC CONDUITS FOR SECONDARY ELECTRICAL SERVICE. INSTALL TRENCH, CONDUIT, FEEDERS, AND BACKFILL. COORDINATE WITH UTILITIES BEFORE INSTALLATION. (REFER TO CIVIL SITE UTILITY PLAN.) SEE ONE LINE DIAGRAM. SEE DUCTBANK DETAIL ON DRAWING 5N-E8.

(15) #2/0 BARE COPPER GROUND CABLE TO TRANSFORMER, GENERATOR, AND FENCE. TIE INTO BUILDING GROUND LOOP.

(16) #2/0 BARE COPPER GROUND CABLE TO DISCONNECT SWITCH RACK. TIE INTO BUILDING GROUND LOOP.

(17) THREE (3) 4" PVC CONDUITS FOR TELEPHONE SERVICE. INSTALL TRENCH, CONDUIT, AND BACKFILL. COORDINATE WITH UTILITIES BEFORE INSTALLATION. (REFER TO CIVIL SITE UTILITY PLAN.)

(18) 6#6, 1#8G., 1(0"C. SEE DRAWING 5N-E7 FOR CONTACTOR CONTROL REQUIREMENTS.

(19) SEE CIVIL SITE UTILITY PLANS FOR PRIMARY TRENCHING AND BACKFILL LOCATIONS. PROVIDE TWO (2) 4"C. WITH PULLWIRE ALONG WITH TRENCHING AND BACKFILL AS DIRECTED BY UTILITY COMPANY. ENCASE IN CONCRETE UNDER ROADWAYS, DRIVEWAYS, AND PARKING LOTS. SEE DUCTBANK DETAIL ON DRAWING 5N-E8.

(20) GROUND LOOP - SEE GROUNDING ELECTRODE DETAIL ON DRAWING 5N-E7, AND SEE POWER AND COMMUNICATION PLAN, DRAWING 5N-E5.

(21) NOT USED.

(22) VERIFY LOCATION OF POST INDICATOR VALVE WITH CIVIL CONTRACTOR. WIRE TO FIRE ALARM SYSTEM.

(23) 3#10, 1#10G., 1"C. SEE DRAWING 5N-E7 FOR CONTACTOR CONTROL REQUIREMENTS. (ALTERNATE CIRCUITS BETWEEN FIXTURES IF TWO CIRCUITS ARE SHOWN.)

(24) VERIFY EXACT LOCATION OF PANELS WITH ARCHITECT. PANEL "TTP" SHALL BE PAD LOCKABLE.

(25) THE SAME CIRCUITS SHALL BE USED FOR ACCELERATING AND DECELERATING LANES.

POWER COMPANY:	OHIO EDISON / FIRST ENERGY		
REPRESENTATIVE:	MR. RICHARD MASLINSKI	PHONE:	1-800-633-4766 EXT. 3257
TELEPHONE COMPANY:	COORDINATE WITH OWNER		
REPRESENTATIVE:	N/A	PHONE:	N/A

CONDUIT SEALS -

ALL CONDUIT PENETRATIONS INTO BUILDING SHALL BE SEALED PER ARCHITECTS DIRECTIONS USING "LINK SEAL" PRODUCT, OR EQUAL.

COORDINATION -

COORDINATE EXACT ROUTING AND ELEVATION OF UNDERGROUND DUCTBANKS AND CONDUITS WITH ALL OTHER TRADES ON SITE PRIOR TO EXCAVATION AND INSTALLATION. PROVIDE ALL TRENCHING, BACKFILL, PATCHING, ETC., UNLESS OTHERWISE NOTED. ALL PRIMARY UTILITY CABLING SHALL BE INSTALLED BY THE RESPECTIVE UTILITY COMPANIES. FOR EXACT LOCATIONS AND FOR HANDHOLE/PULL BOX REQUIREMENTS, REFER TO THE CIVIL DRAWINGS.

COMMUNICATION CONDUIT SYSTEM DESIGN NOTE:

PROVIDE A CONDUIT AND BACK BOX SYSTEM FOR DOOR SECURITY, GATE SECURITY, CCTV, INFORMATION (TELEVISION/MONITOR), SOUND/PAGING, TELE/DATA, AND INTERCOM SYSTEMS. REVIEW SPECIFICATION 16700 AS WELL AS POWER/COMMUNICATION DRAWING AND SITE DRAWINGS FOR SPECIFIC REQUIREMENTS. HOWEVER, EXACT REQUIREMENTS SHALL BE OBTAINED FROM AND COORDINATED WITH RESPECTIVE SYSTEM VENDORS PRIOR TO BOX AND CONDUIT ROUGH-IN.

EXCAVATION AND BACKFILL -

DO ALL EXCAVATION AND BACKFILLING NECESSARY FOR INSTALLATION OF WORK. PRIOR TO OPENING AN EXCAVATION, EFFORT SHALL BE MADE TO DETERMINE WHETHER UNDERGROUND INSTALLATIONS: I.E., SEWER, TELEPHONE, WATER, FUEL, ELECTRIC LINES, ETC., WILL BE ENCOUNTERED, AND IF SO, WHERE SUCH UNDERGROUND INSTALLATIONS ARE LOCATED. WHEN THE EXCAVATION APPROACHES THE ESTIMATED LOCATION OF SUCH INSTALLATIONS, THE EXACT LOCATION SHALL BE DETERMINED, AND WHEN IT IS UNCOVERED, PROPER SUPPORTS SHALL BE PROVIDED FOR THE EXISTING INSTALLATION. UTILITY COMPANIES SHALL BE CONTACTED AND ADVISED OF PROPOSED WORK PRIOR TO THE START OF ACTUAL EXCAVATION. CONTACT OHIO UTILITIES PROTECTION SERVICE 48 HOURS PRIOR TO STARTING WORK. TELEPHONE 1-800-362-2764.

GSI ARCHITECTS, Inc.
1240 Huron Road • Cleveland, Ohio 44115
Phone (216) 363-0000 • Fax (216) 363-1990

COPYRIGHT 1999

BACIK • KARPINSKI • ASSOCIATES INC.
3135 EUCLID AVENUE
CLEVELAND, OHIO 44115
216•391•3700

AUTHORIZED USE:

- ☐ SCHEMATIC DESIGN
- ☐ DESIGN DEVELOPMENT
- ☐ PROGRESS
- ☐ BIDDING
- ☐ BUILDING PERMIT
- ☐ CONSTRUCTION
- ☐ REFERENCE
- ☒ RECORD

REVISIONS:	DATE:	BY:
1 ISSUED FOR BIDDING	12/04/00	MKP
2 ADDENDUM NO. 1	01/11/00	MKP
3 AS-BUILTS	12/20/02	DJW

PREPARED FOR:
OHIO TURNPIKE COMMISSION

DRAWING TITLE:
SITE ELECTRICAL PLAN
MIDDLE RIDGE

SERVICE PLAZA

DWG. NO. 5N-ES1 ISSUED: B

DATE: BY: MKP SCALE: 1"=50'-0"

OTC CONTRACT #: 53-99-03 GSI CONTRACT #: 96-1115

LIGHTING FIXTURE SCHEDULE

TYPE	WATTAGE LAMP	WATTAGE FIXTR	DESCRIPTION	CATALOG NUMBER
SA (1)	1-400 MH	480	METAL HALIDE LUMINARE, DIE-CAST ALUMINUM HOUSING, RECTANGULAR ARCHITECTURAL SHAPE WITH MOUNTING ARM, CONTOURED CLEAR GLASS LENS, HINGED BALLAST TRAY, VERTICAL BURN, TYPE III DISTRIBUTION, BLACK FINISH, MOUNTED ON 45'-0" ALUMINUM POLE WITH BREAKAWAY BASE, AND 480V. HPF BALLAST.	LSI LIGHTING CHALLENGER #CHV-3-400-PSMV-CT-480V-BLK
SB (1)	1-1000 MH	1105	SAME AS FIXTURE TYPE "SA", EXCEPT 1000 WATT LAMP.	LSI LIGHTING CHALLENGER #CHV-3-1000-MHR-CT-480V-BLK
SB1 (1)	1-1000 MH	1105	SAME AS FIXTURE TYPE "SB", EXCEPT WITH HOUSE SIDE CUT OFF SHIELD.	LSI LIGHTING CHALLENGER #CHV-3-1000-MHR-CT-480V-143567BLK-BLK
SC (1)	2-1000 MH	2210	SAME AS FIXTURE TYPE "SB", EXCEPT TWO (2) FIXTURES PER POLE.	LSI LIGHTING CHALLENGER (2) #CHV-3-1000-MHR-CT-480V-BLK
SC1 (1)	2-1000 MH	2210	SAME AS FIXTURE TYPE "SC", EXCEPT BASE SHALL BE 30" ABOVE GRADE.	LSI LIGHTING CHALLENGER (2) #CHV-3-1000-MHR-CT-480V-BLK
SD (1)	2-1000 MH	2210	SAME AS FIXTURE TYPE "SC", EXCEPT WITH TYPE 5 OPTICS AND MOUNTED ON 39'-0" ALUMINUM POLE WITHOUT BREAKAWAY BASE, AND BASE SHALL BE 60" ABOVE GRADE.	LSI LIGHTING CHALLENGER (2) #CHV-5-1000-MHR-CT-480V-BLK
SFP	1-100 MH	315 OPEN CIRCUIT	METAL HALIDE INGROUND 12" ROUND FIXTURE, WITH CAST ALUMINUM HOUSING, 10□ TILT FLAT LENS, SPOT REFLECTOR, AND 277V HPF BALLAST.	HYDREL #9100-A-MH100-277V-TSP-34
SG (1)	1-100 MH	315 OPEN CIRCUIT	METAL HALIDE BOLLARD, 8" ROUND WITH ALUMINUM TOP CAP, LOUVER, AND SHAFT, 42" HIGH, WET LABEL, VANDAL RESISTANT, BLACK FINISH, AND 277V HPF BALLAST.	KIM #VRB1-100MH277-BL-P

GENERAL LIGHTING FIXTURE SCHEDULE NOTES:

1. REFER TO SPECIFICATIONS FOR BALLAST AND LAMP REQUIREMENTS.
2. SEE DRAWING E8 FOR BASE DETAILS.
3. VERIFY FINISHES WITH ARCHITECT PRIOR TO ORDERING.

NOTES:

(1) VERIFY COLOR WITH ARCHITECT (BLACK OR TO MATCH OTHER SITES).

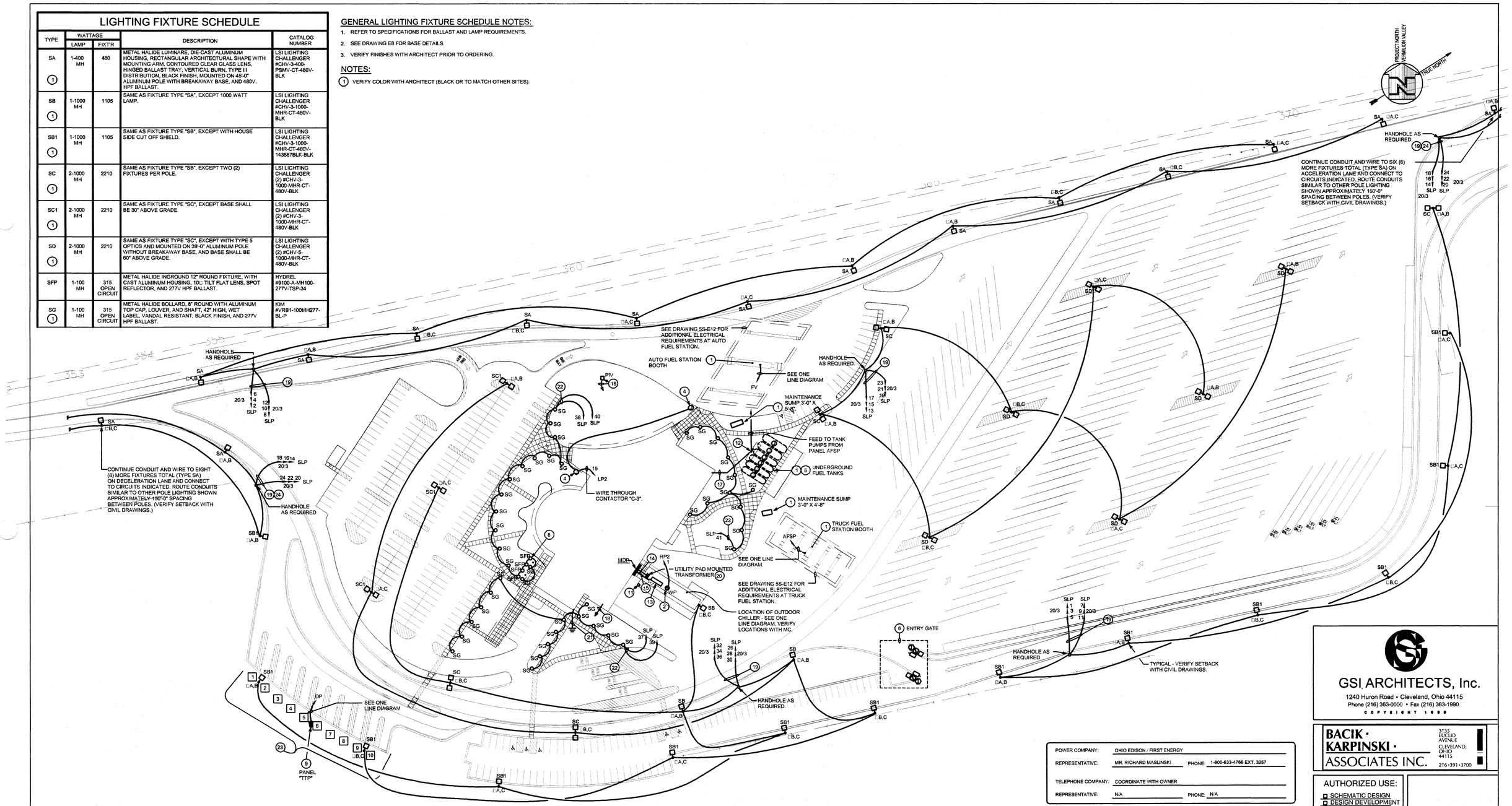

SITE ELECTRICAL PLAN - VERMILLION VALLEY (3)(7)

SCALE: 1" = 50'-0"

PLAN NOTES:

(1) RUN UNDERGROUND 1" CONDUITS FROM LEAK DETECTION PANEL TO TANK FARM AREA FOR SENSOR WIRING. ROUTE 1" CONDUIT FROM EACH MAINTENANCE SUMP LOCATION TO THE LEAK DETECTION PANEL FOR SENSOR WIRING. FOR EXACT QUANTITY OF CONDUITS AND LOCATIONS, SEE PIPING DRAWINGS.

(2) MOUNT WEATHERPROOF GFI RECEPTACLES NEXT TO HVAC EQUIPMENT AND ROUTE CONDUIT INSIDE BUILDING. SEE DETAIL ON DRAWING 5S-E8.

(3) ALL SITE POLE LIGHTING SHALL BE FED WITH DIRECT BURIAL CABLE IN SCHEDULE 40 PVC CONDUIT.

(4) RUN 2#10, 1#10G, 1" CONDUIT FROM ELECTRICAL PANEL "LP2", CIRCUIT 15, TO INGROUND WEATHERPROOF JUNCTION BOX FOR VENDOR SIGN. SEE CIVIL SITE PLAN FOR EXACT LOCATION.

(5) HAZARDOUS AREA (CLASS 1, DIVISION 1 AND 2 LOCATION) AROUND ABOVE GROUND TANK VENTS. PER N.E.C. ARTICLE 514. SEE FITTING DETAIL ON DRAWING 5S-E9.

(6) COMMUNICATION WIRING FOR CAMERA, CARD READER, AND INTERCOM SHALL BE RUN IN SEPARATE CONDUIT FROM POWER FOR GATE, CAMERA, CARD READER, AND INTERCOM. CONDUITS ARE SHOWN ON CIVIL SITE UTILITY PLAN. POWER WIRING SHALL BE 2#10, 1#10G, FED FROM PANEL "RP2", CIRCUIT 2. VERIFY EXACT NEMA 3R OUTLET BOX REQUIREMENTS AND EXACT LOCATIONS WITH ARCHITECT. PROVIDE PULLWIRES IN CONDUIT AS REQUIRED.

(7) ALL SITE CONDUIT TO BE ENCASED IN CONCRETE UNDER PAVED AREAS.

(8) LOCATE LIGHT FIXTURE TYPE "SFP" 5'-0" FROM FLAGPOLE IN A STRAIGHT LINE. REFER TO CIVIL DRAWINGS FOR EXACT LOCATION. (THREE FLAGPOLES ARE IN BETWEEN FIXTURES.)

(9) TT SUBPANEL THROUGH SERVICE PAK POWER OUTLET PANEL, PEDESTAL MOUNTED-SQUARE D CATALOG #PAK75PG. RUN 3#2, 1#6G, 1-0" CONDUIT FROM PANEL "TTP" TO EACH SUBPANEL. SEE MANUFACTURER'S DETAIL.

(10) RADIATOR END OF GENERATOR MOUNTED TOWARD UTILITY TRANSFORMER WITH A DISTANCE OF 7'-0" BETWEEN THEM.

(11) PROVIDE AND INSTALL WEATHERPROOF INGROUND JUNCTION BOX APPROXIMATELY 25 FEET (25') FROM BUILDING IN GRASS FOR FUTURE TRASH COMPACTORS. RUN 2" EMPTY CONDUIT WITH PULLWIRE TO ELECTRICAL ROOM. STUB AND CAP BY CEILING.

(12) LOCATION OF TANK PUMP DISCONNECT SWITCHES (SIX (6) 240V, 3□) MOUNTED ON UNISTRUT. SEE DRAWING 5S-E9 FOR DETAIL.

(13) DIESEL FUEL 500KW GENERATOR. SEE PLAN NOTE 10.

(14) EIGHT (8) 4" PVC CONDUITS FOR SECONDARY ELECTRICAL SERVICE. INSTALL TRENCH, CONDUIT, FEEDERS, AND BACKFILL. COORDINATE WITH UTILITIES BEFORE INSTALLATION. TO CIVIL SITE UTILITY PLAN.) SEE ONE-LINE DIAGRAM. SEE DUCTBANK DETAIL ON DRAWING 5S-E8.

(15) #2/0 BARE COPPER GROUND CABLE TO TRANSFORMER, GENERATOR, AND FENCE. TIE INTO BUILDING GROUND LOOP.

(16) VERIFY LOCATION OF POST INDICATOR VALVE WITH CIVIL CONTRACTOR. WIRE TO FIRE ALARM SYSTEM.

(17) #2/0 BARE COPPER GROUND CABLE TO DISCONNECT SWITCH RACK. TIE INTO BUILDING GROUND LOOP.

(18) THREE (3) 4" PVC CONDUITS FOR TELEPHONE SERVICE. INSTALL TRENCH, CONDUIT, AND BACKFILL. COORDINATE WITH UTILITIES BEFORE INSTALLATION. (REFER TO CIVIL UTILITY PLAN.)

(19) 6#6, 1#8G., 1□"C. SEE DRAWING 5S-E7 FOR CONTACTOR CONTROL REQUIREMENTS.

(20) SEE CIVIL SITE UTILITY PLANS FOR PRIMARY TRENCHING AND BACKFILL LOCATIONS. PROVIDE (2)4"C. WITH PULLWIRE ALONG WITH TRENCHING AND BACKFILL AS DIRECTED BY UTILITY COMPANY. ENCASE IN CONCRETE UNDER ROADWAYS, DRIVEWAYS, AND PARKING LOTS. SEE DUCTBANK DETAIL ON DRAWING 5S-E8.

(21) GROUND LOOP - SEE GROUNDING ELECTRODE DETAIL ON DRAWING 5S-E7, AND SEE POWER AND COMMUNICATIONS PLAN.

(22) 3#10, 1#10G., 1"C. SEE DRAWING 5S-E7 FOR CONTACTOR CONTROL REQUIREMENTS. (ALTERNATE CIRCUITS BETWEEN FIXTURES IF TWO CIRCUITS ARE SHOWN.)

(23) VERIFY EXACT LOCATION OF PANELS WITH ARCHITECT. PANEL "TTP" SHALL BE PAD LOCKABLE.

(24) THE SAME CIRCUITS SHALL BE USED FOR THE ACCELERATING AND DECELERATING LANES.

POWER COMPANY:	OHIO EDISON / FIRST ENERGY
REPRESENTATIVE:	MR. RICHARD MASLINSKI PHONE: 1-800-633-4766 EXT. 3257
TELEPHONE COMPANY:	COORDINATE WITH OWNER
REPRESENTATIVE:	N/A PHONE: N/A

CONDUIT SEALS -

ALL CONDUIT PENETRATIONS INTO BUILDING SHALL BE SEALED PER ARCHITECTS DIRECTIONS USING "LINK SEAL" PRODUCT, OR EQUAL.

COORDINATION -

COORDINATE EXACT ROUTING AND ELEVATION OF UNDERGROUND DUCTBANKS AND CONDUITS WITH ALL OTHER TRADES ON SITE PRIOR TO EXCAVATION AND INSTALLATION. PROVIDE ALL TRENCHING, BACKFILL, PATCHING, ETC., UNLESS OTHERWISE NOTED. ALL PRIMARY UTILITY CABLING SHALL BE INSTALLED BY THE RESPECTIVE UTILITY COMPANIES. FOR EXACT LOCATIONS AND FOR HANDHOLE/PULLBOX REQUIREMENTS, REFER TO THE CIVIL DRAWINGS.

COMMUNICATION CONDUIT SYSTEM DESIGN NOTE:

PROVIDE A CONDUIT AND BACK BOX SYSTEM FOR DOOR SECURITY, GATE SECURITY, CCTV, INFORMATION (TELEVISION/MONITOR), SOUND/PAGING, TELE/DATA, AND INTERCOM SYSTEMS. REVIEW SPECIFICATION 16700 AS WELL AS POWER/COMMUNICATION DRAWING AND SITE DRAWINGS FOR SPECIFIC REQUIREMENTS. HOWEVER, EXACT REQUIREMENTS SHALL BE OBTAINED FROM AND COORDINATED WITH RESPECTIVE SYSTEM VENDORS PRIOR TO BOX AND CONDUIT ROUGH-IN.

EXCAVATION AND BACKFILL -

DO ALL EXCAVATION AND BACKFILLING NECESSARY FOR INSTALLATION OF WORK. PRIOR TO OPENING AN EXCAVATION, EFFORT SHALL BE MADE TO DETERMINE WHETHER UNDERGROUND INSTALLATIONS: I.E., SEWER, TELEPHONE, WATER, FUEL, ELECTRIC LINES, ETC., WILL BE ENCOUNTERED, AND IF SO, WHERE SUCH UNDERGROUND INSTALLATIONS ARE LOCATED. WHEN THE EXCAVATION APPROACHES THE ESTIMATED LOCATION OF SUCH INSTALLATIONS, THE EXACT LOCATION SHALL BE DETERMINED, AND WHEN IT IS UNCOVERED, PROPER SUPPORTS SHALL BE PROVIDED FOR THE EXISTING INSTALLATION. UTILITY COMPANIES SHALL BE CONTACTED AND ADVISED OF PROPOSED WORK PRIOR TO THE START OF ACTUAL EXCAVATION. CONTACT OHIO UTILITIES PROTECTION SERVICE 48 HOURS PRIOR TO STARTING WORK. TELEPHONE 1-800-362-2764.

GSI ARCHITECTS, Inc.
1240 Huron Road • Cleveland, Ohio 44115
Phone (216) 363-0000 • Fax (216) 363-1990

COPYRIGHT 1999

BACIK • KARPINSKI • ASSOCIATES INC.
3135 EUCLID AVENUE CLEVELAND, OHIO 44115
216•391•3700

AUTHORIZED USE:
- ☐ SCHEMATIC DESIGN
- ☐ DESIGN DEVELOPMENT
- ☐ PROGRESS
- ☐ BIDDING
- ☐ BUILDING PERMIT
- ☐ CONSTRUCTION
- ☐ REFERENCE
- ☒ RECORD

REVISIONS:	DATE:	BY:
1 ISSUED FOR BIDDING	12/04/00	MKP
2 ADDENDUM NO. 1	01/11/00	MKP
3 AS-BUILTS	12/20/02	DJW

PREPARED FOR:
OHIO TURNPIKE COMMISSION

DRAWING TITLE:
SITE ELECTRICAL PLAN
VERMILLION VALLEY

SERVICE PLAZA

DWG. NO. 5S-ES1 ISSUED: B

DATE: BY: MKP SCALE: 1"=50'-0"

OTC CONTRACT #: 53-99-04 GSI CONTRACT #: 96-1115

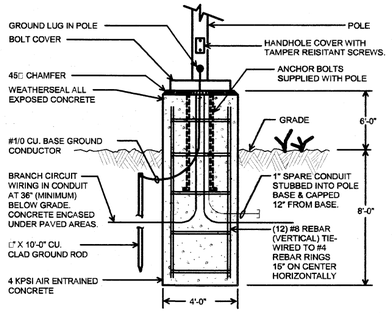

TYPE 'SD' FIXTURE BASE DETAIL
SCALE: NONE

NOTE:
PAINT BASES IN TRUCK PARKING AREA AS DIRECTED ON SITE CIVIL UTILITY PLAN.

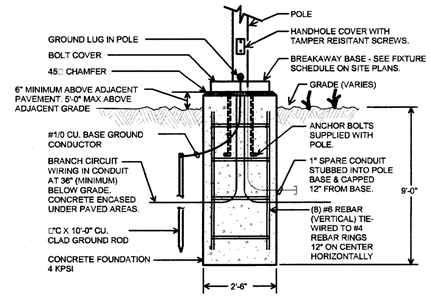

TYPE 'SA', 'SB', 'SB1', AND 'SC' FIXTURE BASE DETAIL
SCALE: NONE

NOTE:
FINISHED PAVEMENT IS CENTERLINE OF LANES AT ACCELERATION AND DECELERATION LANES.

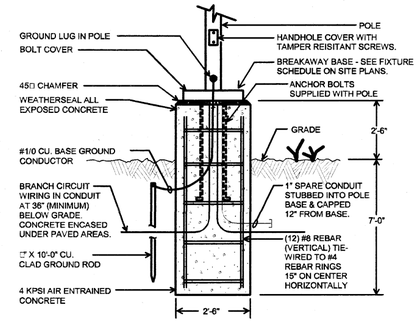

TYPE 'SCI' FIXTURE BASE DETAIL
SCALE: NONE

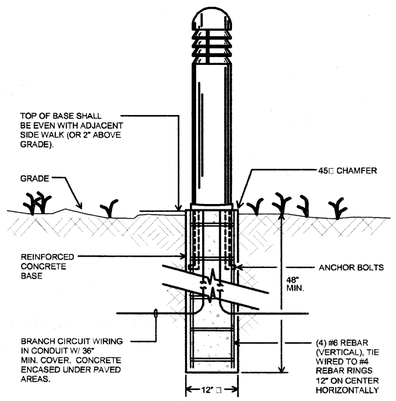

TYPE "SG" FIXTURE DETAIL
SCALE: NONE

NOTE:
FIXTURE SHOWN IS FOR REFERENCE ONLY. SEE FIXTURE SCHEDULE FOR ACTUAL FIXTURE DESCRIPTION.

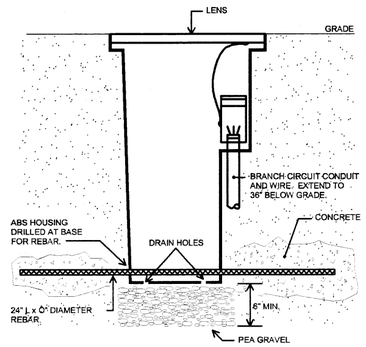

FIXTURE "SFP" INSTALLATION DETAIL
SCALE: NONE

IN SOIL WITH CONCRETE ANCHOR

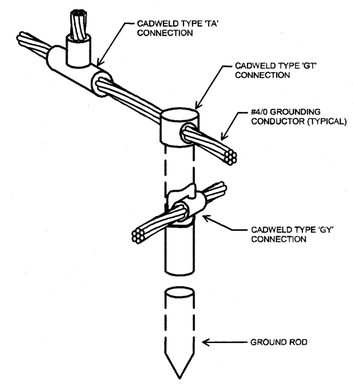

TYPICAL COPPER CLAD GROUND ROD DETAIL
SCALE: NONE

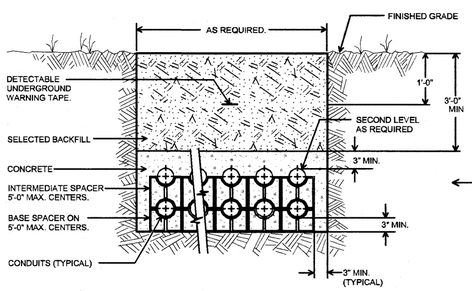

TYPICAL DUCT BANK DETAIL
SCALE: NONE

NOTE:
MINIMUM SEPARATION BETWEEN CONDUITS SHALL BE 3". MINIMUM SPACING BETWEEN POWER AND COMMUNICATION CONDUITS SHALL BE 12". REFER TO DRAWINGS FOR EXACT CONDUIT REQUIREMENTS. EXACT CONFIGURATION AND DEPTH SHALL BE ADJUSTED AFTER COORDINATION WITH OTHER TRADES ON SITE. REFER TO COORDINATION NOTES ON THE DRAWINGS.

GENERAL NOTES:

1. LOCATE UNDERGROUND CONDUIT AT A MINIMUM OF 10'-0" FROM NEAREST TREE, OR IF NOT PRACTICAL, AS DIRECTED IN FIELD BY THE LANDSCAPE ARCHITECT.
2. ALL UNDERGROUND ELECTRICAL CONDUIT SHALL HAVE A DETECTABLE WARNING TAPE INSTALLED 12" BELOW GRADE - DIRECTLY ABOVE THE CONDUIT. WARNING TAPE SHALL BE "TENSOR UNDERGROUND TAPE" MODEL NUMBER "DU SERIES", 3" WIDE, LABELED WITH "CAUTION BURIED A, B, OR C BELOW".
   A - "ELECTRIC LINE", #DU-01.
   B - "TELEPHONE LINE", #DU-05.
   C - "HIGH VOLTAGE LINE", DU-09.
3. CONCRETE ENCASE CONDUIT(S) UNDER ROADWAYS, DRIVEWAYS AND PARKING-LOTS.

TYPICAL DETAILS. SEE CIVIL DRAWINGS FOR ADDITIONAL INFORMATION.

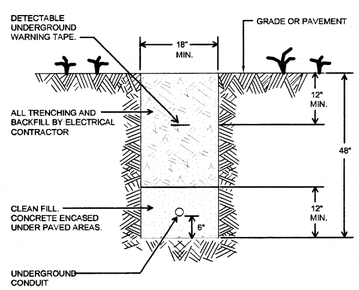

UNDERGROUND CONDUIT UNINSTALLATION DETAIL
SCALE: NONE

GENERAL NOTES:

1. LOCATE UNDERGROUND CONDUIT AT A MINIMUM OF 10'-0" FROM NEAREST TREE, OR IF NOT PRACTICAL, AS DIRECTED IN FIELD BY THE LANDSCAPE ARCHITECT.
2. ALL UNDERGROUND ELECTRICAL CONDUIT SHALL HAVE A DETECTABLE WARNING TAPE INSTALLED 12" BELOW GRADE - DIRECTLY ABOVE THE CONDUIT. WARNING TAPE SHALL BE "TENSOR UNDERGROUND TAPE" MODEL NUMBER "DU SERIES", 3" WIDE, LABELED WITH "CAUTION BURIED A OR B BELOW".
   A - "ELECTRIC LINE", #DU-01.
   B - "TELEPHONE LINE", #DU-05.
3. CONCRETE ENCASE CONDUIT(S) UNDER ROADWAYS, DRIVEWAYS AND PARKING-LOTS.

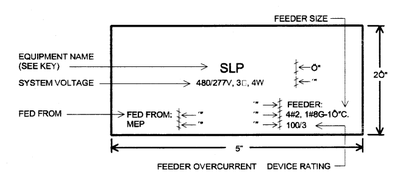

EQUIPMENT NAMEPLATE DETAIL
SCALE: NONE

NOTES:

1. SECURE WITH TWO SHEET METAL SCREWS.
2. REFER TO SPECIFICATION SECTION 16010 FOR ADDITIONAL REQUIREMENTS.

GSI ARCHITECTS, Inc.
1240 Huron Road • Cleveland, Ohio 44115
Phone (216) 363-0000 • Fax (216) 363-1990

COPYRIGHT 1999

BACIK · KARPINSKI · ASSOCIATES INC.
3735 EUCLID AVENUE
CLEVELAND, OHIO 44115
216·391·3700

AUTHORIZED USE:
- SCHEMATIC DESIGN
- DESIGN DEVELOPMENT
- PROGRESS
- BIDDING
- BUILDING PERMIT
- CONSTRUCTION
- REFERENCE
- RECORD

REVISIONS:	DATE:	BY:
ISSUED FOR BIDDING	12/04/00	MKP
AS-BUILTS	12/20/02	DJW

PREPARED FOR:
OHIO TURNPIKE COMMISSION

DRAWING TITLE:
ELECTRICAL DETAILS
VERMILION VALLEY

SERVICE PLAZA

DWG. NO. 5S-E8

ISSUED B

DATE : BY: MKP

SCALE : NONE

OTC CONTRACT #: 55-99-0380 4

GSI CONTRACT #: 98-1115