OHIO TURNPIKE AND INFRASTRUCTURE COMMISSION

THE JAMES W. SHOCKNESSY OHIO TURNPIKE

PROJECT NO. 43-22-03

BRIDGE DECK REPLACEMENT AND REHABILITATION

OHIO TURNPIKE OVER ABANDONED RAILROAD M.P. 98.9,
OHIO TURNPIKE OVER STATE ROUTE 510 M.P. 99.1
SANDUSKY COUNTY, OHIO

INDEX OF SHEETS

TITLE SHEET	1
CONTROL PLAN	2
MAINTENANCE OF TRAFFIC NOTES	3-5
MAINTENANCE OF TRAFFIC TYPICAL SECTIONS	6-7
MAINTENANCE OF TRAFFIC PLANS	8-12
GENERAL NOTES	13
STRUCTURE NOTES	14
ESTIMATED QUANTITIES	15
TYPICAL SECTIONS	16
PLAN AND PROFILES	17-20
MP 98.9 BRIDGE PLANS	21-29
MP 99.1 BRIDGE PLANS	30-47
SLOPE REPAIR PLANS	48-50

OHIO TURNPIKE AND INFRASTRUCTURE COMMISSION STANDARD DRAWINGS

~~AS-1~~	~~12/31/2019~~	~~REINFORCED CONCRETE APPROACH SLAB~~
CB-2	10/20/2017	CATCH BASIN, NO. CB-1 RECONSTRUCTED
~~CBR-1~~	~~02/09/2021~~	~~CONCRETE BARRIER, TYPES B-50 AND C-50, AS PER PLAN~~ 2
DJ-1	12/31/2019	DECK JOINT DETAILS
F-1	01/07/2021	RIGHT OF WAY FENCE
RPM-1	10/20/2017	RAISED PAVEMENT MARKER AND STRIPING LAYOUT
TC-2	10/20/2017	TRAFFIC CONTROL SPEED MEASUREMENT MARKING
TC-3	10/20/2017	TRAFFIC CONTROL MISCELLANEOUS DELINEATION
TCB-1	10/20/2017	REQUIREMENT FOR PORTABLE BARRIER SETTING AND REMOVAL OPERATIONS
TCR-1	01/07/2021	TEMPORARY TRAFFIC CONTROL GENERAL NOTES
TCR-2	01/07/2021	TEMPORARY TRAFFIC CONTROL DETAILS, LEGEND, NOTES AND STANDARD SINGLE LANE CLOSURE
TCR-9.1	10/20/2017	TEMPORARY TRAFFIC CONTROL LANE CLOSURE AT EXIT AND ENTRANCE RAMPS
TCR-10	01/07/2021	TEMPORARY TRAFFIC CONTROL DOUBLE LANE CLOSURE
TCR-11PS	10/20/2017	TEMPORARY TRAFFIC CONTROL PAVEMENT STRIPING MOVING ZONE
TCR-12	01/07/2021	TEMPORARY TRAFFIC CONTROL SINGLE AND DOUBLE LANE SHIFT ZONES
TCR-13	01/07/2021	SONIC NAP ALERT PATTERN (SNAP)
TCR-14	01/07/2021	TEMPORARY TRAFFIC CONTROL SINGLE LANE CLOSURE WITH PORTABLE BARRIER
TCR-15	01/07/2021	TEMPORARY TRAFFIC CONTROL SIGNS FOR MAINTENANCE AND CONSTRUCTION
UD-1	09/19/2018	UNDER-DRAIN DETAILS

OHIO DEPARTMENT OF TRANSPORTATION STANDARD DRAWINGS

MGS-1.1	01/19/2018	GUARDRAIL DETAILS
MGS-2.1	01/19/2018	MIDWEST GUARDRAIL SYSTEM, STANDARD TYPE MGS
MGS-3.1	01/19/2018	MGS BRIDGE TERMINAL ASSEMBLY, TYPE 1
MGS-3.2	01/18/2013	MGS BRIDGE TERMINAL ASSEMBLY, TYPE 2
MGS-4.3	01/18/2013	GUARDRAIL TRANSITIONS
MT-95.30	07/19/2019	CLOSING RIGHT OR LEFT LANE OF A MULTI-LANE DIVIDED HIGHWAY WITH DRUMS
MT-96.11	04/16/2021	SIGNALIZED CLOSING 1 LANE OF A 2-LANE HIGHWAY
~~MT-96.20~~	~~07/19/2019~~	~~DETAILS FOR SIGNALIZED CLOSING 1 LANE OF A 2-LANE HIGHWAY~~
MT-96.26	01/18/2019	TYPICAL WIRING DIAGRAM FOR ONE SIGNAL HEAD AND ONE DETECTOR
~~MT-105.10~~	~~01/19/2018~~	~~CONSTRUCTION ACCESS POINTS~~ 2
MT-105.10	01/17/2020	TEMPORARY SIGN SUPPORT
SBR-1-13	07/20/2018	SINGLE SLOPE CONCRETE BRIDGE RAILING
TC-52.10	10/18/2013	SIGN BLANK DETAILS 1
TC-52.20	01/15/2021	SIGN BLANK DETAILS 2

OHIO DEPARTMENT OF TRANSPORTATION SUPPLEMENTAL SPECIFICATIONS AND SUPPLEMENTS

SS 800	04/16/2021	REVISION TO THE 2019 CONSTRUCTION AND MATERIAL SPECIFICATIONS
SS 821	04/20/2012	ARROW BOARD
SS 849	01/18/2013	HEAT STRAIGHTENING OF DAMAGED STRUCTURAL STEEL
SS 921	04/20/2012	ARROW BOARD
S 1021	01/18/2019	ARROW BOARD PREQUALIFICATION PROCEDURES

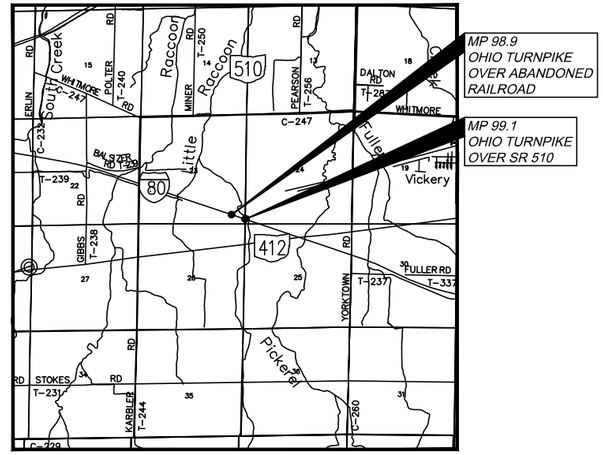

APPROVED FOR
THE OHIO TURNPIKE AND INFRASTRUCTURE COMMISSION
BY

CHIEF ENGINEER

09/02/2021
DATE

UNDERGROUND UTILITIES
CONTACT ALL SERVICES AT LEAST TWO WORKING DAYS BEFORE YOU DIG

CALL 1-800-362-2764 OR 811 (CELLULAR)

OR GO TO OHIO811.org Before You Dig

OHIO OIL & GAS PRODUCERS UNDERGROUND PROTECTION SERVICE CALL: 614-715-2984

OTIC DIVISION TRADES SUPERVISOR:
440-971-2731 - WEST (M.P. 0.0 - M.P. 126.4)
440-971-2781 - EAST (M.P. 126.4 - M.P. 241.26)

ENGINEERS SEAL

STATE OF OHIO
HAMID V. HOMAEE
57241
REGISTERED
PROFESSIONAL ENGINEER

SIGNED:
DATE: 09/01/2021

19004_GT001.dwg; 9/01/21 - 10:53am

ESTIMATED QUANTITIES

ITEM	TOTAL	UNIT	ITEM DESCRIPTION	GENERAL	M.P. 98.9	M.P. 99.1	SLOPE	SHT NO.
			GENERAL					
IB. ART. 6	LUMP SUM	LUMP SUM	PREMIUM FOR CONTRACT PERFORMANCE BOND AND PAYMENT BOND	LUMP SUM				
SP 614	LUMP SUM	LUMP SUM	MAINTAINING TRAFFIC	LUMP SUM				
SP 619	LUMP SUM	LUMP SUM	FIELD OFFICE	LUMP SUM				
SP 623	LUMP SUM	LUMP SUM	CONSTRUCTION LAYOUT SURVEY	LUMP SUM				
624	LUMP SUM	LUMP SUM	MOBILIZATION	LUMP SUM				
			ROADWAY					
201	LUMP SUM	LUMP SUM	CLEARING AND GRUBBING	LUMP SUM				
202	225	FOOT	GUARDRAIL REMOVED		100		125	
202	50	FOOT	GUARDRAIL REMOVED FOR REUSE				50	
202	8	EACH	BRIDGE TERMINAL ASSEMBLY REMOVED		4	4		
202	582	SQ YD	PAVEMENT REMOVED		443		139	
202	80	FOOT	CONCRETE BARRIER REMOVED		40	40		
202	125	FOOT	CURB REMOVED				125	
202	495 2	FOOT	FENCE REMOVED		495	2		2
203	24,418	CU YD	EMBANKMENT, AS PER PLAN 2		23,230		1,188	29
203	712	CU YD	EXCAVATION		616	96		
203	1,088	CU YD	EXCAVATION, AS PER PLAN				1,088	50
~~203~~	~~667~~	~~CU YD~~	~~EXCAVATION OF SUBGRADE~~		~~334~~	~~333~~	2	
204 2	6,518	SQ YD	SUBGRADE COMPACTION		5,946	433	139	2
204	9	HOUR	PROOF ROLLING		8		1	
254	2,951	SQ YD	PAVEMENT PLANING, ASPHALT CONCRETE (3")		307	2,644		
SP 302	1,936	CU YD	ASPHALT CONCRETE BASE, PG64-22		1,912		24	
SP 304	1,748	CU YD	AGGREGATE BASE		1,652	72	24	2
SP 304	394	CU YD	AGGREGATE BASE (TOE KEY)				394	
407	2,117	GAL	NON-TRACKING TACK COAT		1,707	397	13	
441	8	CU YD	2" ASPHALT CONCRETE SURFACE COURSE, TYPE 1, (448), PG64-22				8	
SP 402 2	406	CU YD	ASPHALT CONCRETE INTERMEDIATE COURSE, PG 70-22 (FR) (T=1 3/4") 2		277	129		
SP 404	290	CU YD	ASPHALT CONCRETE SURFACE COURSE, USING CRUSHED SLAG,		198	92		
			PG 70-22 (FR) (T=1 1/4")					
SP 451	100	SQ YD	FULL DEPTH PAVEMENT REPAIRS (ASPHALT)			100		
SP 605	1,400	FOOT	6" SHALLOW PIPE UNDERDRAIN, WITH FABRIC WRAP		1,400			
SP 605	3,500	FOOT	6" BASE PIPE UNDERDRAIN		3,500			
606	50	FOOT	GUARDRAIL REBUILT				50	
606	525	FOOT	GUARDRAIL, TYPE MGS, USING STEEL POSTS		525			
606	125	FOOT	GUARDRAIL, TYPE MGS, USING LONG STEEL POSTS				125	
606	2	EACH	MGS BRIDGE TERMINAL, TYPE 1, USING STEEL POSTS			2		
606	2	EACH	MGS BRIDGE TERMINAL, TYPE 2, USING STEEL POSTS			2		
607	360	FOOT	FENCE, TYPE 47		360			
609	825	FOOT	ASPHALT CONCRETE CURB, TYPE 1		700		125	
SP 611	100	FOOT	6" CONDUIT, TYPE F, 707.33		100			
SP 611	5	EACH	CATCH BASIN ADJUSTED TO GRADE		3	2		
~~614~~	~~LUMP SUM~~	~~LUMP SUM~~	~~DETOUR SIGNING~~	~~LUMP SUM~~ 2				
~~614~~	~~5~~	~~EACH~~	~~REPLACEMENT SIGN~~	~~5~~				
614	5	EACH	WORK ZONE IMPACT ATTENUATOR FOR 24" WIDE HAZARDS	5				
			(UNIDIRECTIONAL OR BIDIRECTIONAL)					
614	1,156	DAYS	PORTABLE CHANGEABLE MESSAGE SIGN, AS PER PLAN	1,156				4
614	13,872	HOURS	ZONE PERSON	13,872				
SPECIAL	15,000	FOOT	"SNAP" MILL AND FILL	15,000				4
SP 614C	7.0	MILE	REMOVAL OF PAVEMENT MARKING	7.0				
SP 621	212 2	EACH	RAISED PAVEMENT MARKING	212				
SP 622	8,240	FOOT	TEMPORARY PORTABLE BARRIER	7,940			300 2	
SP 622	1,720	FOOT	TEMPORARY PORTABLE BARRIER, BRIDGE MOUNTED	1,720				
622	350	FOOT	CONCRETE BARRIER, TYPE B-50, AS PER PLAN 2		300	50	2	
~~622~~	~~50~~	~~FOOT~~	~~CONCRETE BARRIER, TYPE D~~			~~50~~		
~~625~~	~~1~~	~~EACH~~	~~LIGHT POLE, MISC.: REMOVAL, STORAGE, REERECTION~~				~~1~~	
625	1	EACH	LIGHT POLE FOUNDATION REMOVAL AND DISPOSAL				1	
625	1	EACH	LIGHT POLE FOUNDATION, 24" X 10' DEEP				1	
SP 626	2	EACH	BARRIER REFLECTOR, TYPE A (WHITE)				2	
630	6	EACH	SIGNING MISC.: LOW CLEARANCE SIGN			6		
630	16	SQ FT	SIGNING MISC.: ADDITIONAL SIGNS GROUND MOUNTED, AS PER	16				
			DIRECTED BY THE ENGINEER					
642	7.0	MILE	PAVEMENT MARKING MISC.: FINAL PAVEMENT MARKING PREPARATION	7.0				
642	0.53	MILE	EDGE LINE, 4", TYPE 1		0.25	0.25	0.03	
642	0.50	MILE	LANE LINE, 4", TYPE 1		0.25	0.25		
659	2 548	CU YD	TOPSOIL		486 2		62	
659	4,931	SQ YD	SEEDING AND MULCHING, AS PER PLAN		4,375		556	13
671	556	SQ YD	EROSION CONTROL MAT				556	
832	100,000	EACH	EROSION CONTROL	100,000				
832	LUMP SUM	LUMP SUM	STORM WATER POLLUTION PROTECTION PLAN	LUMP SUM				
SPECIAL	125	FOOT	BENCHING SLOPE DRAIN				125	50

ITEM	TOTAL	UNIT	STRUCTURES ITEM DESCRIPTION	GENERAL	M.P. 98.9	M.P. 99.1	SHT NO.
SP 202	LUMP SUM	LUMP SUM	PORTIONS OF STRUCTURE REMOVED		LUMP SUM	LUMP SUM	
503	LUMP SUM	LUMP SUM	COFFERDAMS AND EXCAVATION BRACING		LUMP SUM		
SP 509	132,237	POUND	EPOXY COATED REINFORCING STEEL, GRADE 60			132,237	
SP 511B 1	94	CU. YD.	CLASS HP4 CONCRETE, ABUTMENT SLABS 1			94	
SP 511B	350	CU. YD.	CLASS HP4 CONCRETE, SUPERSTRUCTURE DECK SLAB			350	
SP 511B	75	CU. YD.	CLASS S CONCRETE, BARRIERS AND PARAPETS, USING TYPE 1 CEMENT			75	
SP 511B	12	CU. YD.	CLASS HP4 CONCRETE FOR PREPLACEMENT TESTING			12	
~~516~~	~~36~~	~~EACH~~	~~ELASTOMERIC BEARING PAD~~			~~36~~	2
516 2	20	EACH	RESET BEARING			20	2
SP 516A	40	FOOT	CRACK REPAIR USING EPOXY INJECTION			40	
SP 516B	942	FOOT	SEALING OF CONSTRUCTION JOINTS			942	
SP 516G	18	EACH	REPLACE EXPANSION BEARING DEVICE			18	
SP 516J	18	EACH	REPLACE FIXED BEARING DEVICE			18	
~~518~~	~~53~~	~~CU. YD.~~	~~POROUS BACKFILL WITH GEOTEXTILE FABRIC~~			~~53~~	2
~~518~~	~~260~~	~~FOOT~~	~~6" PERFORATED CORRUGATED PLASTIC PIPE~~			~~260~~	
~~518~~	~~60~~	~~FOOT~~	~~6" NON-PERFORATED CORRUGATED PLASTIC PIPE~~			~~60~~	
SP 519	80	SQ. FT.	PATCHING OF CONCRETE STRUCTURES			80	
526	433	SQ. YD.	REINFORCED CONCRETE APPROACH SLABS			433	
SP 527	1	LUMP SUM	FALSEWORK, TEMPORARY BRACING AND PROTECTIVE STRUCTURES			LUMP SUM	
SP 533	132	FOOT	3" CONTINUOUS STRIP SEAL IN STRUCTURAL STEEL JOINT			132	
SP 533A	132	FOOT	ELASTOMERIC COMPRESSION SEAL IN STRUCTURAL STEEL JOINT			132	
SP 536	2,082	SQ. YD.	CONCRETE WEATHERPROOFING, DECK AND APPROACH SLABS			2,082	
SP 536	938	SQ. YD.	CONCRETE WEATHERPROOFING, SUBSTRUCTURE			938	
849	LUMP SUM	LUMP SUM	STRAIGHTENING DAMAGED MEMBERS			LUMP SUM	14, 44, 45

NO.	REVISIONS	BY	DATE
1	ADDENDUM 1	RAP	08/21
2	ADDENDUM 2	RAP	08/21

CALC-ROAD MTG | CHECKED SJP/RY | CALC-STRUCT RAP | IN CHARGE HVH

DESIGN AGENCY: KS Associates Inc. 260 BURNS ROAD, ELYRIA, OHIO 44035

ESTIMATED QUANTITIES

SANDUSKY COUNTY

M.P. 98.9 AND 99.1

PROJECT 43-22-03

DATE: 9/28/2020

OHIO TURNPIKE AND INFRASTRUCTURE COMMISSION

19004_GG001.dwg; 8/31/21 - 1:19pm

WESTBOUND PROFILE

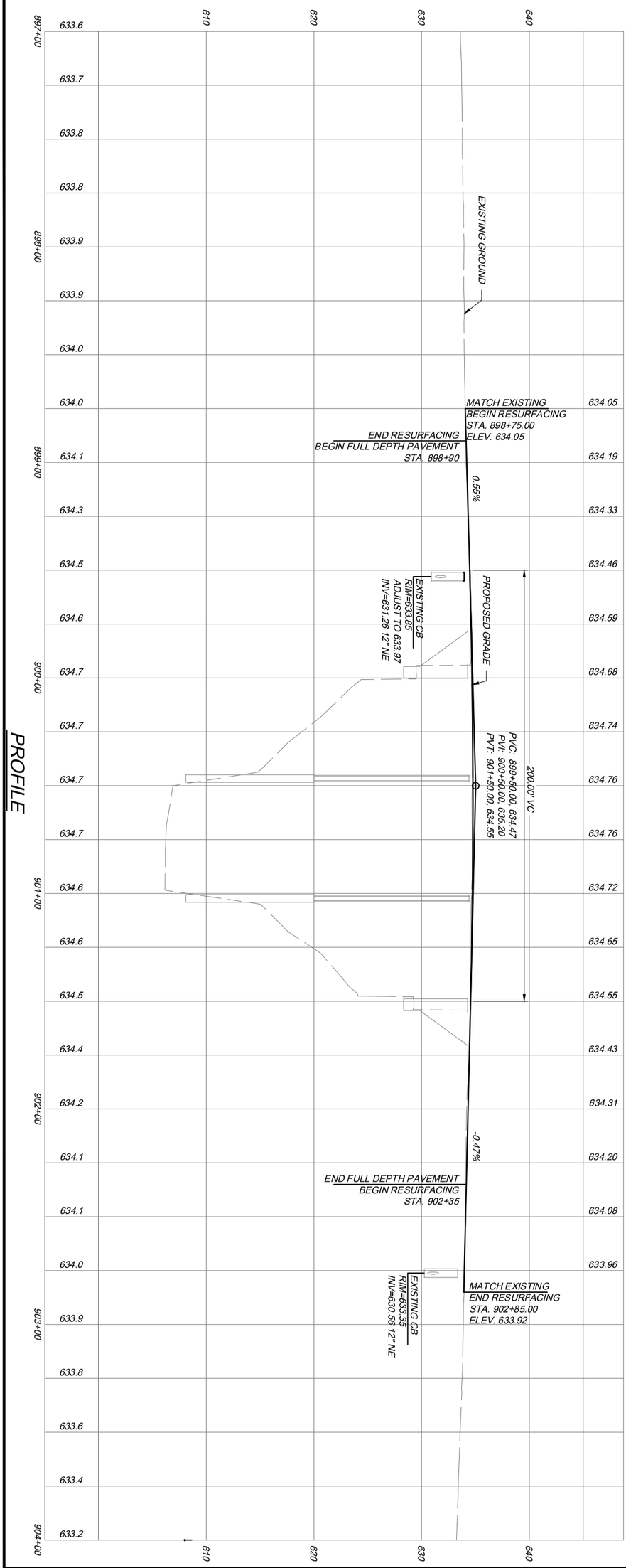

EASTBOUND WESTBOUND

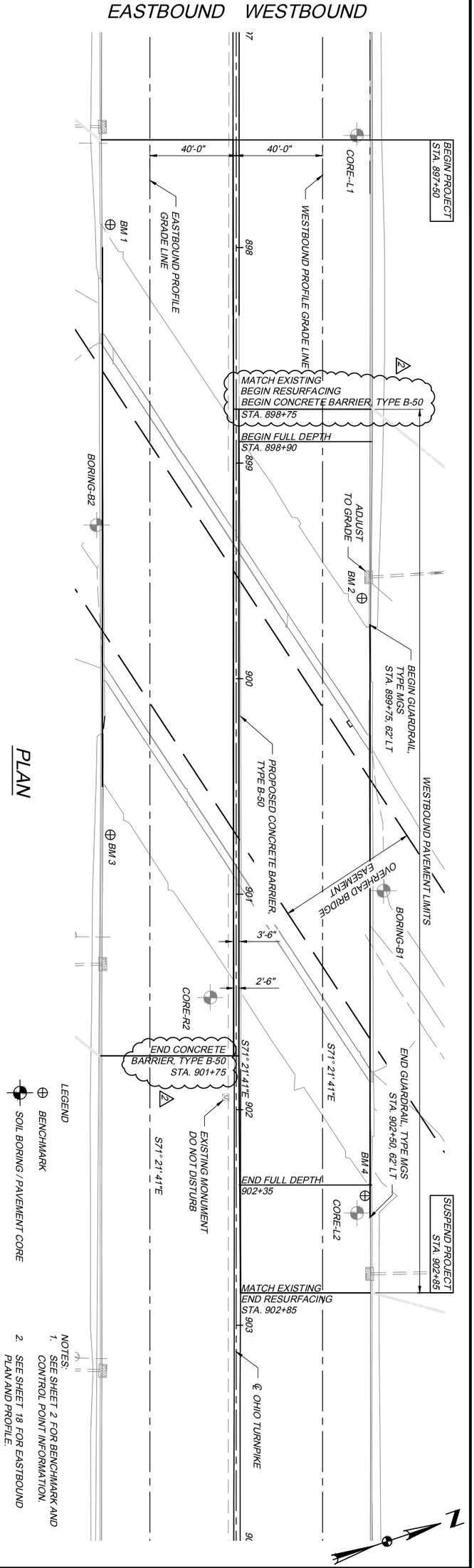

17 / 50	PROJECT 43-22-03	PLAN AND PROFILE - WESTBOUND	DESIGNED MTG	CHECKED SJP	NO.	REVISIONS	BY	DATE	DESIGN AGENCY
	DATE: 9/28/2020	OHIO TURNPIKE OVER ABANDONED RAILROAD	DRAWN MTG	IN CHARGE HVH	1	ADDENDUM 2	MTG	08/21	KS Associates Inc.
		M.P. 98.9 SANDUSKY COUNTY			-				260 BURNS ROAD, ELYRIA, OHIO 44035

OHIO TURNPIKE AND INFRASTRUCTURE COMMISSION

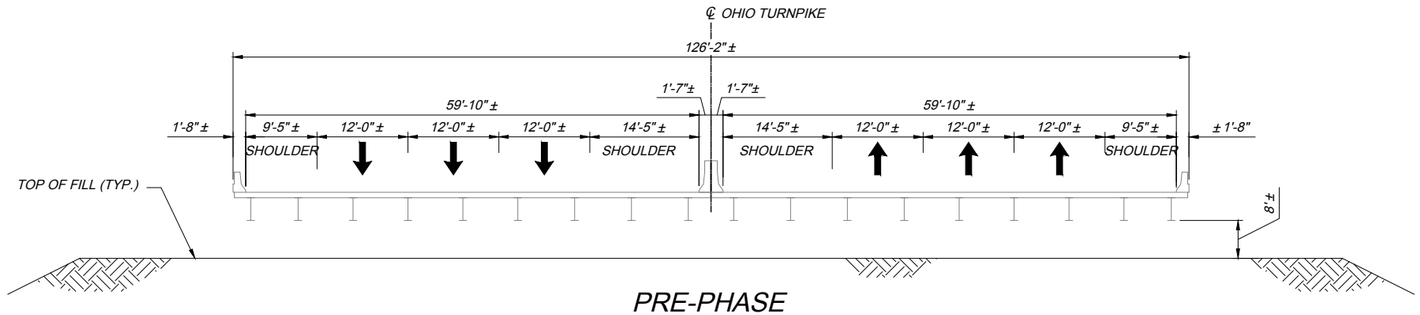

PRE-PHASE

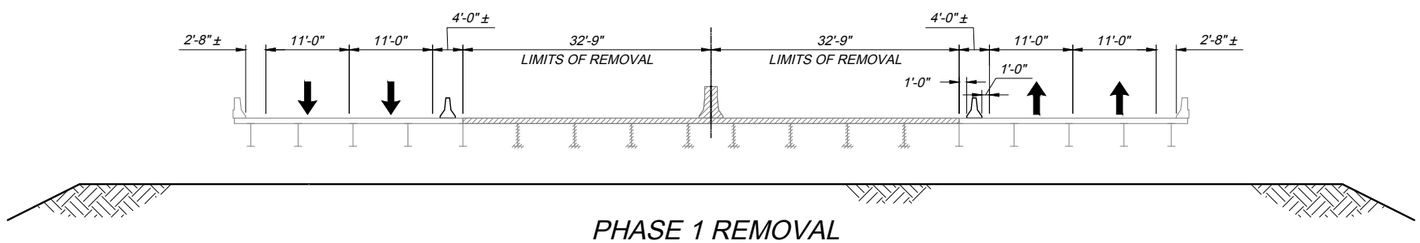

PHASE 1 REMOVAL

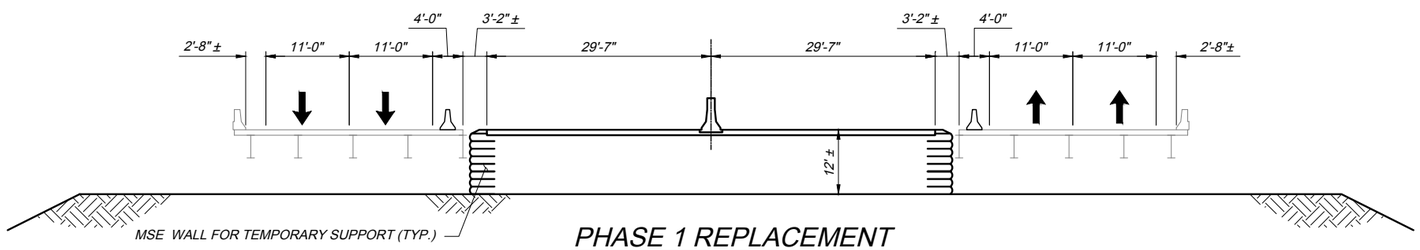

PHASE 1 REPLACEMENT

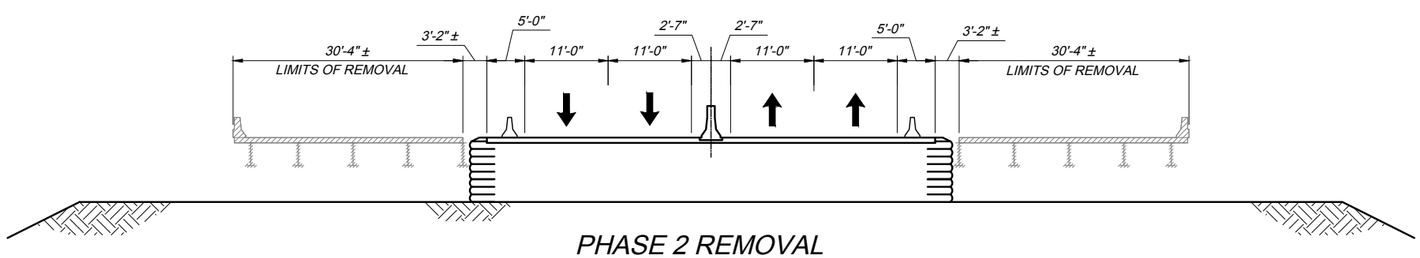

PHASE 2 REMOVAL

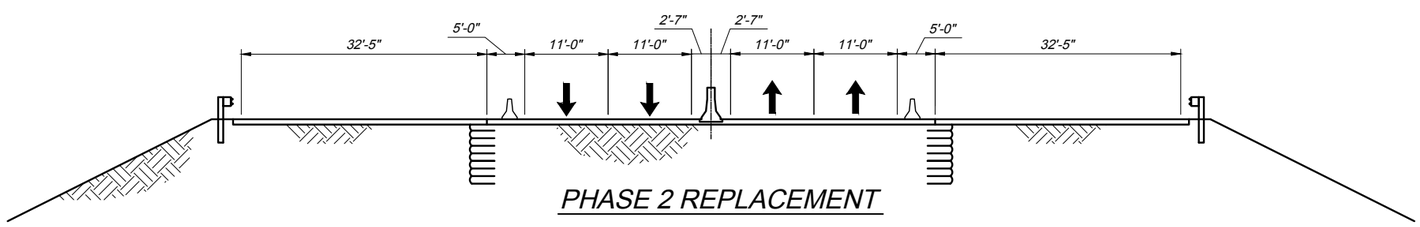

PHASE 2 REPLACEMENT

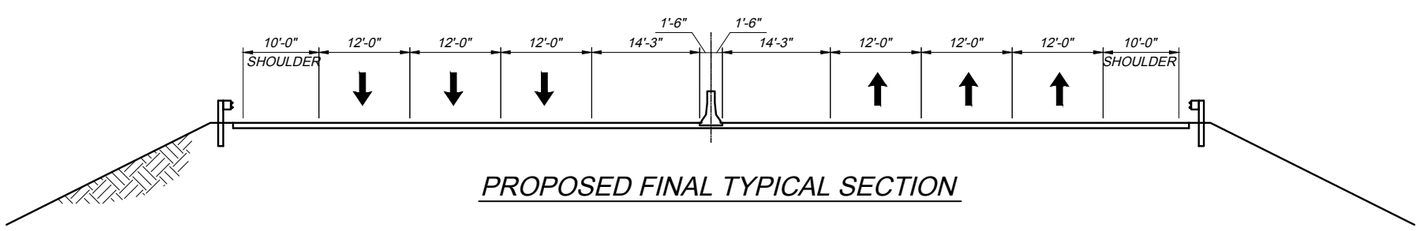

PROPOSED FINAL TYPICAL SECTION

1

PRE-PHASE CONSTRUCTION SEQUENCE:

1. CLEAR, GRUB, AND SCARIFY EXISTING SOILS TO RECEIVE PROPOSED FILL PER PROJECT GEOTECHNICAL REPORT.
2. INSTALL SURFACE TREATMENT PER NOTE 4 ON SHEET 8 OF 18 TO PIERS/CRASH WALLS TO REMAIN.
3. INSTALL SETTLEMENT PLATFORMS AS SHOWN ON SHEET 7 OF 9 TO MONITOR THE EMBANKMENT SETTLEMENT
4. INSTALL THE EMBANKMENT PER ODOT CMS 203 AND PROJECT GEOTECHNICAL REPORT UP TO THE 8' HEADROOM BELOW THE EXISTING BEAMS ABOUT 3 MONTHS PRIOR TO BRIDGE PHASE 1 REMOVALS.
5. MONITOR SETTLEMENT FOR A MINIMUM OF 6 WEEKS. WHEN THE MEASURED SETTLEMENT RATE IS LESS THAN 0.2 INCHES PER WEEK FOR A MINIMUM OF TWO WEEKS (NOT INCLUDING THE INITIAL 6 WEEKS) AND ACCEPTED BY THE ENGINEER, MOBILIZE FOR PHASE 1 CONSTRUCTION.

1

PHASE 1 CONSTRUCTION SEQUENCE:

1. SET UP MOT FOR PHASE I PER SHEETS 3 THROUGH 12 OF 50. SHIFT TWO TRAFFIC LANES TO THE OUTER PORTION OF EACH EXISTING STRUCTURE, ALLOWING THE INSIDE PORTION OF THE DECKS AND MEDIAN BARRIERS TO BE REMOVED AND REPLACED WITH FILL.
2. REMOVE INTERIOR PORTION OF BRIDGE SUPERSTRUCTURE, ABUTMENTS, AND APPROACHES AS DETAILED ON SHEETS 2 THROUGH 5 OF 9. ALL PIERS/CRASH WALLS TO REMAIN (BURIED IN PLACE).
3. INSTALL REMAINING FILL EMBANKMENT PER ODOT CMS 203 AND PROJECT GEOTECHNICAL REPORT TO PROPOSED SUBGRADE ELEVATION FOR PHASE 1 USING A MECHANICALLY STABILIZED EARTH (MSE) OR SIMILAR SYSTEM TO SUPPORT THE EMBANKMENT ADJACENT TO THE REMAINING SUPERSTRUCTURE. CONTRACTOR TO SUBMIT DETAILS AND DESIGN CALCULATIONS FOR THE MSE FOR APPROVAL PRIOR TO START OF PHASE 1 CONSTRUCTION.
4. WHEN SETTLEMENT IS LESS THAN 0.2 INCHES PER WEEK AND ACCEPTED BY THE ENGINEER, CONSTRUCT ROADWAY PAVEMENT (PHASE 1).

1

PHASE 2 CONSTRUCTION SEQUENCE

1. SET UP MOT FOR PHASE 2 PER SHEETS 3 THROUGH 12 OF 50. SHIFT TRAFFIC INWARD TO THE NEW ROADWAY PORTION.
2. REMOVE REMAINING PORTIONS OF BRIDGE SUPERSTRUCTURE, ABUTMENTS, AND APPROACHES AS DETAILED ON SHEETS 2 THROUGH 5 OF 9. ALL PIERS/CRASH WALLS TO REMAIN.
3. INSTALL REMAINING FILL EMBANKMENT PER ODOT CMS 203 AND PROJECT GEOTECHNICAL REPORT TO THE ELEVATIONS SHOWN ON SHEET 7 OF 9.
4. WHEN SETTLEMENT IS LESS THAN 0.2 INCHES PER WEEK AND ACCEPTED BY THE ENGINEER, CONSTRUCT ROADWAY DRAINAGE AND PAVEMENT (PHASE II).
5. INSTALL SAFETY FEATURES, GUARDRAILS.
6. COMPLETE EMBANKMENT PROTECTION, SEEDING, AND MULCHING.
7. RESTORE FINAL TRAFFIC CONDITION.

1

SETTLEMENT PLATFORM NOTES

THE CONTRACTOR IS RESPONSIBLE FOR PLANNING FILL PLACEMENT OPERATIONS SUCH THAT THE SETTLEMENT PLATFORM SYSTEMS REMAIN INTACT AND PROTECTED DURING CONSTRUCTION. NEW PIPE EXTENSIONS (I.E. RISERS) SHALL BE INSTALLED TO KEEP THE PIPE ABOVE THE FILL ELEVATIONS. SETTLEMENT PLATFORMS SHALL BE FABRICATED AND INSTALLED IN ACCORDANCE WITH ASTM D 6598 AND ODOT GB-4 ITEM 7.

SETTLEMENT PLATFORMS SHALL BE INSTALLED PRIOR TO PLACEMENT OF EMBANKMENT. ADDITIONALLY, SURVEY POINTS AT EACH SUBSTRUCTURE UNIT SHALL BE ESTABLISHED AND MONITORED ON A REGULAR BASIS. ONCE THE PLACEMENT OF THE BACKFILL STARTS, EACH PLATFORM SHALL BE SURVEYED BY THE CONTRACTOR'S SURVEYOR THREE TIMES PER WEEK DURING FILL OPERATIONS AND AN AVERAGE OF ONCE PER WEEK THROUGHOUT THE MONITORING PERIOD WHICH SHOULD BE A MINIMUM OF 6 WEEKS. SURVEYS OF THE PLATFORMS SHALL BE PERFORMED IMMEDIATELY PRIOR TO AND IMMEDIATELY AFTER INSTALLING EXTENSIONS DURING FILL PLACEMENT ACTIVITIES. EACH SETTLEMENT MONITOR SURVEY RECORD SHALL INCLUDE A RECORD OF THE TOP OF FILL ELEVATION ADJACENT TO THE SETTLEMENT MONITOR.

COST OF THE ABOVE DESCRIBED WORK, INCLUDING LABOR, MATERIALS, AND INCIDENTALS, SHALL BE INCLUDED IN THE BID UNIT PRICE FOR ITEM 203 - EMBANKMENT, AS PER PLAN.

2

MECHANICALLY STABILIZED EARTH WALL NOTES

COST OF THE ABOVE DESCRIBED WORK, INCLUDING LABOR, MATERIALS, AND INCIDENTALS, SHALL BE INCLUDED IN THE BID UNIT PRICE FOR ITEM 203 - EMBANKMENT, AS PER PLAN.

DESIGN AGENCY
KS Associates Inc.
260 BURNS ROAD, ELYRIA, OHIO 44035

NO.	REVISIONS	BY	DATE
1	ADDENDUM 1	RAP	08/21
2	ADDENDUM 2	RAP	08/21
-	-	-	-

DESIGNED	CHECKED
SS	RY
DRAWN	IN CHARGE
SS	HVH

SEQUENCE OF CONSTRUCTION
OHIO TURNPIKE OVER ABANDONED RAILROAD
SANDS COUNTY
MP 98.9

PROJECT 43-22-03
DATE: 9/28/2020

9 / 9

29 / 50

OHIO TURNPIKE AND INFRASTRUCTURE COMMISSION

MP 98.9_SC001.dwg; 8/31/21 - 1:19pm

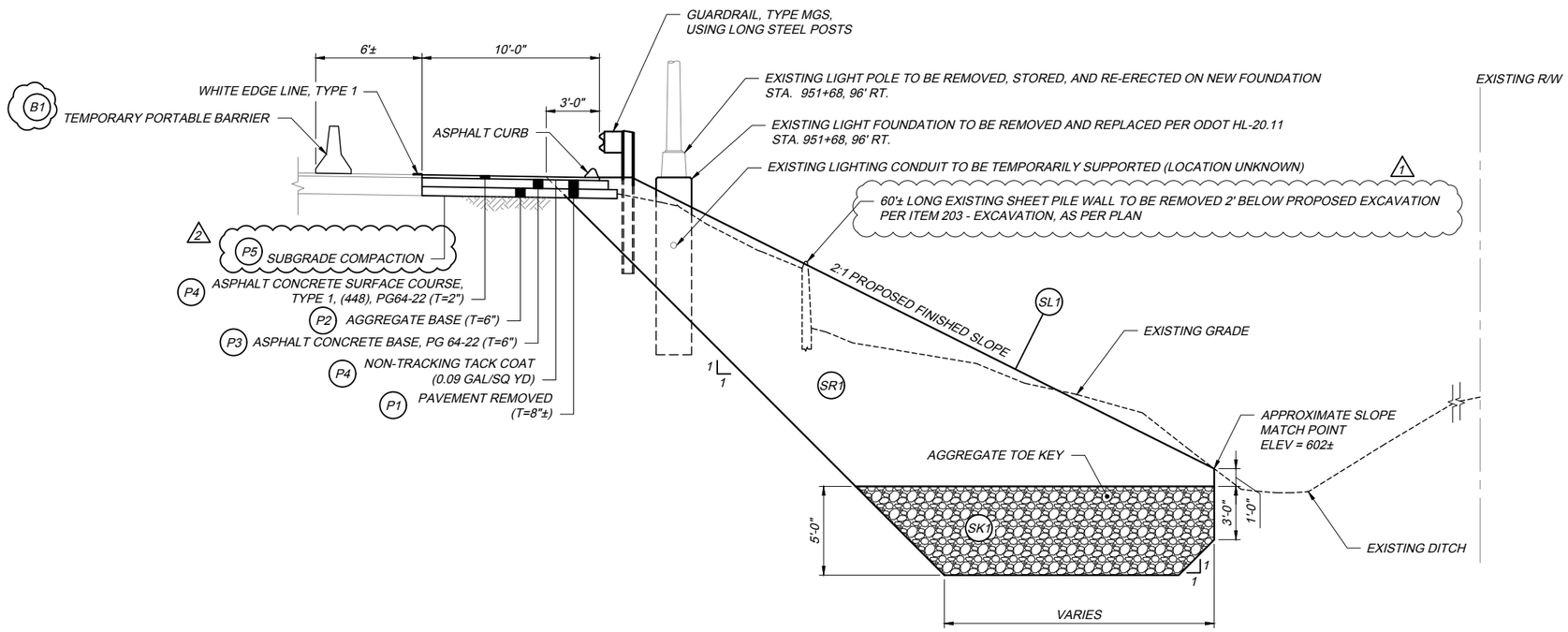

SLOPE REPAIR TYPICAL SECTION

REF	LOCATION	202 PAVEMENT REMOVED (T=8"±)	203 EXCAVATION, AS PER PLAN	203 EMBANKMENT	204 PROOF ROLLING	204 SUBGRADE COMPACTION	302 ASPHALT CONCRETE BASE, PG 64-22 (T=6")	SP 304 AGGREGATE BASE	SP 304 AGGREGATE BASE (TOE KEY)	407 NON-TRACKING TACK COAT (0.09 GAL/SQ YD)	441 ASPHALT CONCRETE SURFACE COURSE, TYPE 1, (448), PG64-22 (T=2")	622 TEMPORARY PORTABLE BARRIER	659 TOPSOIL	659 SEEDING AND MULCHING, AS PER PLAN	671 EROSION CONTROL MAT
		SQ YD	CU YD	CU YD	HOUR	SY	CU YD	CU YD	CU YD	GAL	CU YD	FOOT	CU YD	SQ YD	SQ YD
P1	950+75 - 952+00	139													
P2	950+75 - 952+00							24							
P3	950+75 - 952+00						24								
P4	950+75 - 952+00									13	8				
P5	950+75 - 952+00					139									
SR1	950+75 - 952+00		1088	1088	1										
SK1	950+75 - 952+00								394						
SL1	950+75 - 952+00												62	556	556
2 B1	950+00 - 953+00											300			
	SUBTOTAL	139	1088	1088	1	139	24	24	394	13	8	300	62	556	556

NOTES

SHOULDER PAVEMENT SHALL BE REMOVED AND REPLACED FOR THE SPECIFIED WIDTH. THE CONTRACTOR SHALL FULL DEPTH SAW CUT TO PROVIDE A CLEAN FACE. ALL VERTICAL SURFACES SHALL BE CLEANED AND TACK COATED. THE COST OF THE SAW CUT AND CLEANING SHALL BE INCIDENTAL TO ITEM 202 - PAVEMENT REMOVED.

2 THE RIGHT SHOULDER SHALL REMAIN CLOSED IN ACCORDANCE WITH OTIC STANDARD DRAWING TCR-9.2 WHEN TEMPORARY PORTABLE BARRIER (TPB) IS IN PLACE. THE COST OF THE REQUIRED ZONE, INCLUDING TPB, SHALL BE PAID UNDER ITEM SP 622 - TEMPORARY PORTABLE BARRIER. ALL TPB SUPPLIED SHALL BE IN ACCORDANCE WITH SP 622. CONTRACTOR SHALL UTILIZE OTIC STANDARD DRAWING TCB-1 FOR INGRESS AND EGRESS OF TRUCK WITHIN THE CLOSED RIGHT SHOULDER FOR BARRIER SETTING OPERATION.

ITEM 625 - LIGHT POLE FOUNDATION

PRIOR TO EXCAVATION AND REMOVAL OF THE EXISTING LIGHT POLE FOUNDATION, THE CONTRACTOR SHALL CONTACT OTIC MAINTENANCE TO LOCATE THE EXISTING ELECTRICAL CONDUIT AND COORDINATE ANY DE-ENERGIZING AT LEAST ONE WEEK PRIOR TO PERFORMANCE OF THE WORK. THE EXISTING LIGHT POLE SHALL BE INSPECTED BY THE CONTRACTOR AND ANY NOTED DEFECTS COMMUNICATED TO THE CHIEF ENGINEER. THE LIGHT POLE SHALL BE DISCONNECTED, REMOVED CAREFULLY, AND STAGED/PROTECTED UNTIL IT CAN BE REINSTALLED ON THE PROPOSED FOUNDATION. ANY DAMAGE INCURRED DURING THIS WORK SHALL BE REMEDIED AT NO COST TO THE PROJECT.

ANY NECESSARY CONDUIT OR CABLING REPLACEMENT FOR THE RECONNECTION OF THE LIGHT SHALL BE CONSIDERED INCIDENTAL TO ITEM 625 - LIGHT POLE FOUNDATION, 24" x 10" DEEP. CONDUIT/CABLING DAMAGED BY THE CONTRACTOR AND DEEMED BY THE CHIEF ENGINEER TO BE UNSUITABLE FOR REUSE SHALL BE REPLACED IN KIND AT NO ADDITIONAL COST TO THE PROJECT.

19004SS_SM001.dwg; 8/31/21 - 1:19pm

DESIGN AGENCY: KS Associates Inc. 260 BURNS ROAD, ELYRIA, OHIO 44035

NO.	REVISIONS	BY	DATE
1	ADDENDUM 1	RAP	08/21
2	ADDENDUM 2	RAP	08/21
-	-	-	-

DESIGNED RAP | CHECKED RY | DRAWN RAP | IN CHARGE HVH

SLOPE REPAIR DETAILS - E.B. M.P. 99.9
OHIO TURNPIKE OVER STATE ROUTE 510
SANDUSKY COUNTY
MP 99.1

PROJECT 43-22-03
DATE: 9/28/2020

2 / 3

49 / 50

OHIO TURNPIKE AND INFRASTRUCTURE COMMISSION

TEMPORARY PORTABLE BARRIER

THE CONTRACTOR SHALL PROVIDE TEMPORARY PORTABLE BARRIER IN ACCORDANCE WITH SP 622. TEMPORARY PORTABLE BARRIER SHALL BE IN PLACE PRIOR TO REMOVING ANY GUARDRAIL. THE COST OF ALL LABOR, EQUIPMENT, MATERIALS, AND INCIDENTALS NEEDED TO PROVIDE THE TEMPORARY PORTABLE BARRIER SHALL BE CONSIDERED INCIDENTAL TO THE COST OF ITEM SP 614 MAINTAINING TRAFFIC. TPB TAPER RATE AND PLACEMENT SHALL BE IN ACCORDANCE WITH MT-95.40.

CONTINGENCY QUANTITIES

THE CONTRACTOR SHALL NOT ORDER MATERIALS OR PERFORM WORK FOR ITEMS DESIGNATED BY PLAN NOTE TO BE USED "AS DIRECTED BY THE CHIEF ENGINEER" UNLESS AUTHORIZED BY THE CHIEF ENGINEER. THE ACTUAL WORK LOCATION AND QUANTITIES USED FOR SUCH ITEMS SHALL BE INCORPORATED INTO THE FINAL CHANGE ORDER GOVERNING THE COMPLETION OF THIS PROJECT.

INCLEMENT WEATHER

THE CONTRACTOR SHALL BE AWARE OF AND PREPARE FOR CHANGING WEATHER CONDITIONS. WHEN CONDITIONS DICTATE, OR AS DIRECTED BY THE CHIEF ENGINEER, THE CONTRACTOR SHALL PROVIDE AND UTILIZE NECESSARY EQUIPMENT TO PREVENT WATER FROM PONDING ALONG THE MILLED SURFACE AND FLOWING INTO AND ACROSS ACTIVE TRAFFIC LANES.

ITEM 203 - EXCAVATION, AS PER PLAN

ANY DEWATERING MEASURES REQUIRED TO PERFORM THE WORK AS DETAILED IN THESE PLANS SHALL BE CONSIDERED INCIDENTAL TO THIS ITEM.

1 REMOVAL OF THE EXISTING FAILED SHEET PILE WALL SHALL BE INCIDENTAL TO THIS ITEM. CONTRACTOR SHALL CUT THE EXISTING SHEETS TO 2' BELOW THE PROPOSED EXCAVATION LIMITS.

PAYMENT FOR ALL LABOR, EQUIPMENT, AND MATERIALS NECESSARY FOR THE ABOVE MENTIONED SHALL BE CONSIDERED INCIDENTAL TO ITEM 203 - EXCAVATION, AS PER PLAN.

ITEM 203 - EMBANKMENT

A CONTINGENCY QUANTITY OF 100 CUBIC YARDS HAS BEEN INCLUDED IN THE TOTAL QUANTITY OF ITEM 203 - EMBANKMENT FOR USE AS DIRECTED BY THE CHIEF ENGINEER TO REPLACE EXISTING SOIL DEEMED UNSUITABLE FOR USE IN THE REPAIR OF THE SLOPE. REPLACEMENT MATERIAL SHALL CONSIST OF NATURAL SOILS A4-A, A-6A, OR A-6B.

ESTIMATED QUANTITIES (CARRIED TO GENERAL SUMMARY)

ITEM	TOTAL	UNIT	ITEM DESCRIPTION
201	1	LUMP	CLEARING AND GRUBBING
202	125	FOOT	GUARDRAIL REMOVED
202	50	FOOT	GUARDRAIL REMOVED FOR REUSE
202	139	SQ YD	PAVEMENT REMOVED (T=8"±)
202	125	FOOT	CURB REMOVED
203	1188	CU YD	EMBANKMENT
203	1088	CU YD	EXCAVATION, AS PER PLAN
204	1	HOUR	PROOF ROLLING
302	24	CU YD	ASPHALT CONCRETE BASE, PG 64-22 (T=6")
304	418	CU YD	AGGREGATE BASE
407	13	GAL	NON-TRACKING TACK COAT
441	8	CU YD	2" ASPHALT CONCRETE SURFACE COURSE, TYPE 1, (448), PG64-22
606	50	FOOT	GUARDRAIL REBUILT
606	125	FOOT	GUARDRAIL, TYPE MGS, USING LONG STEEL POSTS
609	125	FOOT	CURB, TYPE 1
SP 614	1	LUMP	MAINTAINING TRAFFIC
SP 623	1	LUMP	CONSTRUCTION LAYOUT SURVEY
624	1	LUMP	MOBILIZATION
625	1	EACH	LIGHT POLE, MISC.: REMOVAL, STORAGE, AND REERECTION
625	1	EACH	LIGHT POLE FOUNDATION REMOVAL AND DISPOSAL
625	1	EACH	LIGHT POLE FOUNDATION, 24" X 10' DEEP
SP 626	2	EACH	BARRIER REFLECTOR, TYPE A (WHITE)
642	0.03	MILE	EDGE LINE, 4", TYPE 1
659	556	SQ YD	SEEDING AND MULCHING, AS PER PLAN
SPECIAL	125	FOOT	BENCHING SLOPE DRAIN

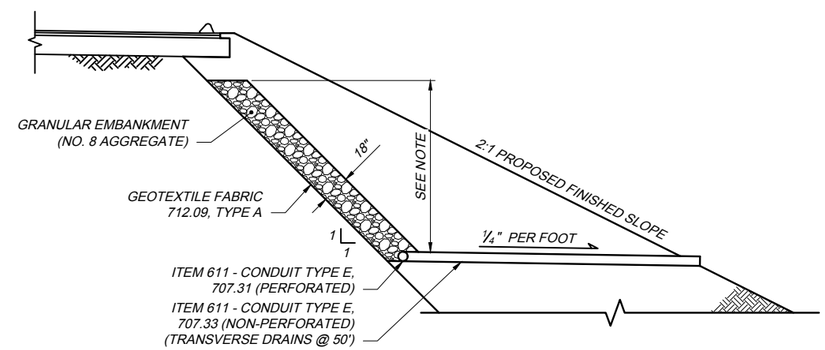

ITEM SPECIAL - BENCHING SLOPE DRAIN DETAIL

NOTES

IF WET SOILS ARE ENCOUNTERED DURING EXCAVATION, SPECIAL BENCHING SLOPE DRAINS SHALL BE INSTALLED AT THE BACK OF THE EXCAVATION AS DIRECTED BY THE CHIEF ENGINEER. THESE DRAINS SHALL CONSIST OF ITEM 203 GRANULAR EMBANKMENT, AS PER PLAN (NO. 8 AGGREGATE), ITEM 690 GEOTEXTILE FABRIC, 712.09 TYPE A, AND ITEM 611 CONDUIT TYPE E, 707.31 (PERFORATED). THE TYPE E CONDUIT SHALL BE PERFORATED AS PER CONDUIT FOR ITEM 605 UNCLASSIFIED PIPE UNDERDRAINS. THE GRANULAR EMBANKMENT SHALL BE PLACED IN LIFTS AS THE SPECIAL BENCHING BACKFILL IS CONSTRUCTED. THE SLOPE DRAIN HEIGHT AND LOCATION SHALL BE DETERMINED BY THE CHIEF ENGINEER. THE TOP OF THE AGGREGRATE DRAIN SHALL BE 30" BELOW THE TOP OF FINISHED GRADE. THE CONDUIT TYPE E SHALL BE PERFORATED PER ITEM 605 UNCLASSIFIED PIPE UNDERDRAINS. TRANSVERSE OUTLETS FOR THE TYPE E CONDUIT SHALL BE INSTALLED AT 50' INTERVALS OR AS DIRECTED BY THE CHIEF ENGINEER AND SHALL CONSIST OF ITEM 611 CONDUIT TYPE F, 707.33 WITH ITEM 604 PRECAST REINFORCED CONCRETE OUTLETS.

THE USE OF CRUSHED GRAVEL AND/OR SLAG FOR GRANULAR EMBANKMENT WILL NOT BE PERMITTED. THE GRANULAR EMBANKMENT SHALL BE PLACED IN LIFTS AS THE EMBANKMENT IS CONSTRUCTED AND WRAPPED WITH GEOTEXTILE FABRIC.

2 ALL PIPE DIAMETERS SHALL BE 6".

THE PLANS INCLUDE A QUANTITY OF 125 FEET OF ITEM SPECIAL - BENCHING SLOPE DRAIN FOR USE AS DIRECTED BY THE CHIEF ENGINEER. ALL LABOR, EQUIPMENT, MATERIALS, CONNECTIONS, CONDUIT, GRANULAR EMBANKMENT, GEOTEXTILE FABRIC, AND INCIDENTALS NEEDED TO COMPLETE THIS ITEM SHALL BE INCLUDED IN THE UNIT PRICE BID PER FOOT OF ITEM SPECIAL - BENCHING SLOPE DRAIN, INSTALLED AND ACCEPTED.

DESIGN AGENCY
KS Associates Inc.
260 BURNS ROAD, ELYRIA, OHIO 44035

NO.	REVISIONS	BY	DATE
1	ADDENDUM 1	RAP	08/21
2	ADDENDUM 2	RAP	08/21
-	-	-	-

DESIGNED RAP
CHECKED RY
DRAWN RAP
IN CHARGE HVH

SLOPE REPAIR NOTES - E.B. M.P. 99.9
OHIO TURNPIKE OVER STATE ROUTE 510
SANDUSKY COUNTY
MP 99.1

PROJECT 43-22-03
DATE: 9/28/2020

OHIO TURNPIKE AND INFRASTRUCTURE COMMISSION

190045S_GN001.dwg; 8/31/21 - 1:19pm