SLOPE REPAIR TYPICAL SECTION QUANTITY SUBSUMMARY

REF NO.	STATION TO STATION			202 PAVEMENT REMOVED (SY)	203 EXCAVATION (#) (CY)	203 EMBANKMENT, AS PER PLAN (#) (CY)	203 BORROW, AS PER PLAN (#) (CY)	203 BORROW, AS PER PLAN, REINFORCED EMBANKMENT (#) (CY)	SP304 ASPHALT CONCRETE BASE, PG64-22 (T=8") (CY)	304 AGGREGATE BASE (CY)	407 NON-TRACKING TACK COAT (GAL)	441 ASPHALT CONCRETE SURFACE COURSE, TYPE 1, (446), PG64-22 (T=2") (CY)	601 TIED CONCRETE BLOCK MAT, TYPE 1 (SY)	605 6" SHALLOW PIPE UNDERDRAINS WITH GEOTEXTILE FABRIC (FEET)	611 6" CONDUIT, TYPE F FOR UNDERDRAIN OUTLETS (FT)	611 PRECAST REINFORCED CONCRETE OUTLET (EACH)	642 EDGE LINE, 6", TYPE 1 (WHITE) ** (MILE)	659 SEEDING AND MULCHING, CLASS 2 (SY)	659 SEEDING AND MULCHING, CLASS 3B OR 3C (SY)	659 COMMERCIAL FERTILIZER (TON)	659 WATER (MGAL)	659 TOPSOIL (CY)	670 SLOPE EROSION PROTECTION MAT, TYPE A (SY)	SPECIAL SONIC NAP ALERT PATTERN (SNAP) ** (MILE)	863 REINFORCED EMBANKMENT, AS PER PLAN (CY)
									UNREINFORCED SOIL SLOPE REPAIR															
	EASTBOUND																							
PR1	567+88.00	TO	576+45.00	1055																				
PR2	578+55.00	TO	583+23.95	578																				
P1	567+88.00	TO	576+45.00						247	199	133	59												
P2	578+55.00	TO	583+23.95						135	122	73	32												
UD1	567+88.00	TO	576+45.00										2	857	32	1								
UD2	578+55.00	TO	583+22.00											467	11									
PWEL1	567+88.00	TO	576+45.00														0.22						0.22	
PWEL2	578+55.00	TO	583+23.95														0.09						0.09	
SR1	568+00.00	TO	576+45.00		11431	11656	11656																	
SR2	578+55.00	TO	583+10.00		7493	7667	7667																	
SL1	568+00.00	TO	576+45.00															5583		~~0.78~~	31	620	5583	
SL2	578+55.00	TO	583+10.00 (a)															4673		0.65	26	519	4673	
	WESTBOUND																							
PR3	573+88.00	TO	577+50.00	446																				
P3	573+88.00	TO	577+50.00						104	94	57	25												
UD3	573+88.00	TO	577+50.00										2	362	32	1								
PWEL3	573+88.00	TO	577+50.00														0.13						0.13	
SR3	573+88.00	TO	577+50.00		5337	5278	5278																	
~~SL3~~	~~574+00.00~~	~~TO~~	~~577+50.00~~															~~2786~~		~~0.39~~	~~15~~	~~399~~	~~2786~~	
SL4	581+75.00	TO	BRIDGE (a)															333		0.05	2	37	333	
									REINFORCED SOIL SLOPE REPAIR															
	EASTBOUND																							
PR4	576+45.00	TO	578+55.00	258																				
P4	576+45.00	TO	578+55.00						61	54	33	14												
UD4	576+45.00	TO	578+55.00											205										
PWEL4	576+45.00	TO	578+55.00														0.04						0.04	
SR4	576+45.00	TO	578+55.00		3452			3167																3167
SL5	576+45.00	TO	578+55.00																1619	0.23	9	180	1619	
	WESTBOUND																							
PR5	577+50.00	TO	581+93.81	546																				
P5	577+50.00	TO	581+93.81						128	115	69	30												
UD5	577+50.00	TO	581+83.58											434	11									
PWEL5	577+50.00	TO	581+93.81														0.08						0.08	
SR5	577+50.00	TO	581+75.00		7980			7185																7185
SL6	577+50.00	TO	581+75.00																3596	0.5	20	399	3596	
	(a) INCLUDES THE AREA ADJACENT TO THE BRIDGE ABUTMENT																							
			SUBTOTALS	2883	35693	24601	24601	10352	675	584	365	160	4	2325	86	2	0.56	13375	5215	2.60	103	2064	18590	0.56	10352

(#) - THE ESTIMATED QUANTITIES FOR EXCAVATION, EMBANKMENT, AND BORROW ARE BASED ON/AS DETERMINED FROM THE CROSS SECTIONS. THE ACTUAL EXCAVATION AND EMBANKMENT AND/OR BORROW ~~QUANTITIES~~ SHALL BE VERIFIED BY FIELD SURVEY. THE CONTRACTOR SHALL FIELD SURVEY THE SLOPE REPAIR AREA PRIOR TO, DURING, AND AFTER EXCAVATION AND EMBANKMENT OPERATIONS. THE SURVEYOR SHALL GENERATE CROSS SECTIONS AT 50-FOOT INTERVALS. AVERAGE END AREAS WILL BE USED TO DETERMINE THE ACTUAL AMOUNT OF MATERIAL REMOVED AND REPLACED. THE COST OF SURVEYING, GENERATING CROSS SECTIONS AND QUANTITIES SHALL BE CONSIDERED INCIDENTAL TO ITEM SP 623.

** ITEMS INCLUDE AN ADDITIONAL PLAN QUANTITY OF 300 FEET TO BE USED AS DIRECTED BY THE CHIEF ENGINEER.

DESIGN AGENCY: ms consultants, inc. 333 E. Federal Street Youngstown, Ohio 44503

NO.	REVISIONS	BY	DATE
2	ADDENDUM NO. 2	SWG	5/28/21

DESIGNED SWG | CHECKED JDK | DRAWN SWG | IN CHARGE MFM

TYPICAL SECTION QUANTITY SUBSUMMARY

WOOD COUNTY

M.P. 73.80 TO M.P. 74.00

PROJECT 70-21-01

DATE: 04/09/2021

OHIO TURNPIKE AND INFRASTRUCTURE COMMISSION

8 / 35

N:\0716\06855 OTIC GES 99-20-04\PRODITS\Task 2\Plans\Roadway\Sheets\99-20-04_TYPICAL_SUBSUMMARY.dwg; Multipurpose Sheet; 6/03/21 - 2:41pm

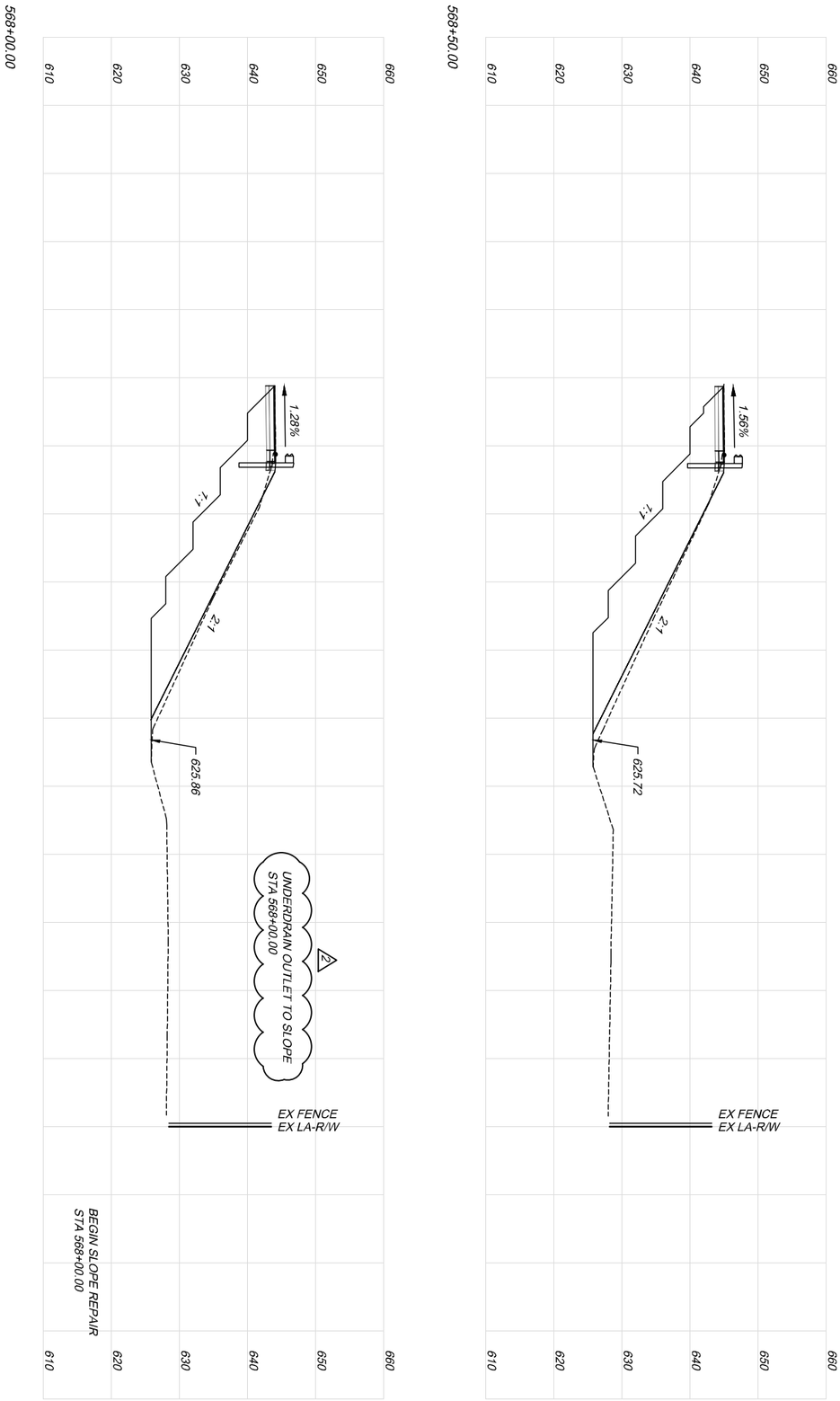

NOTE: ACTUAL BENCHING ELEVATIONS MAY VARY FROM THE ELEVATIONS SHOWN IN THE CROSS SECTIONS.

SCALE 20:1

9 / 35	PROJECT 70-21-01	SLOPE REPAIR EB CROSS SECTION	DESIGNED SWG	CHECKED SWG	NO	REVISIONS	BY	DATE	DESIGN AGENCY
	DATE: 04/09/2021	STA. 568+00 TO STA. 568+50	DRAWN JDK	IN CHARGE MFM	2	ADDENDUM NO. 2	SWG	5/26/21	ms consultants, inc. 333 E. Federal Street Youngstown, Ohio 44503
		M.P. 73.80 TO M.P. 74.00 WOOD COUNTY			-	-	-	-	
					-	-	-	-	

OHIO TURNPIKE AND INFRASTRUCTURE COMMISSION

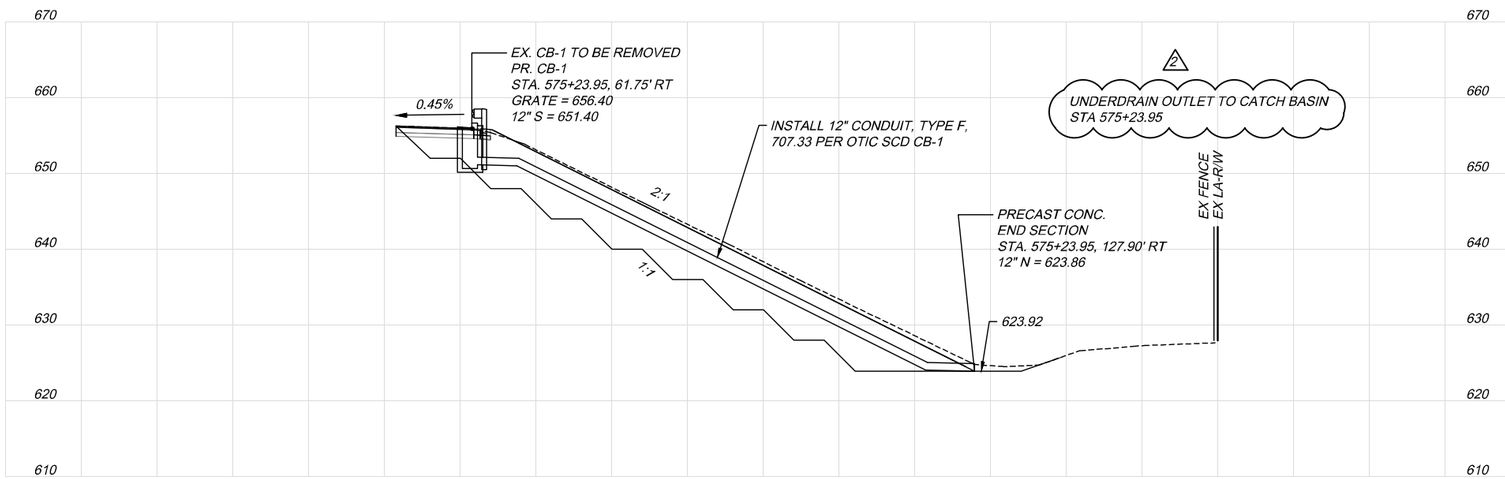

575+00.00

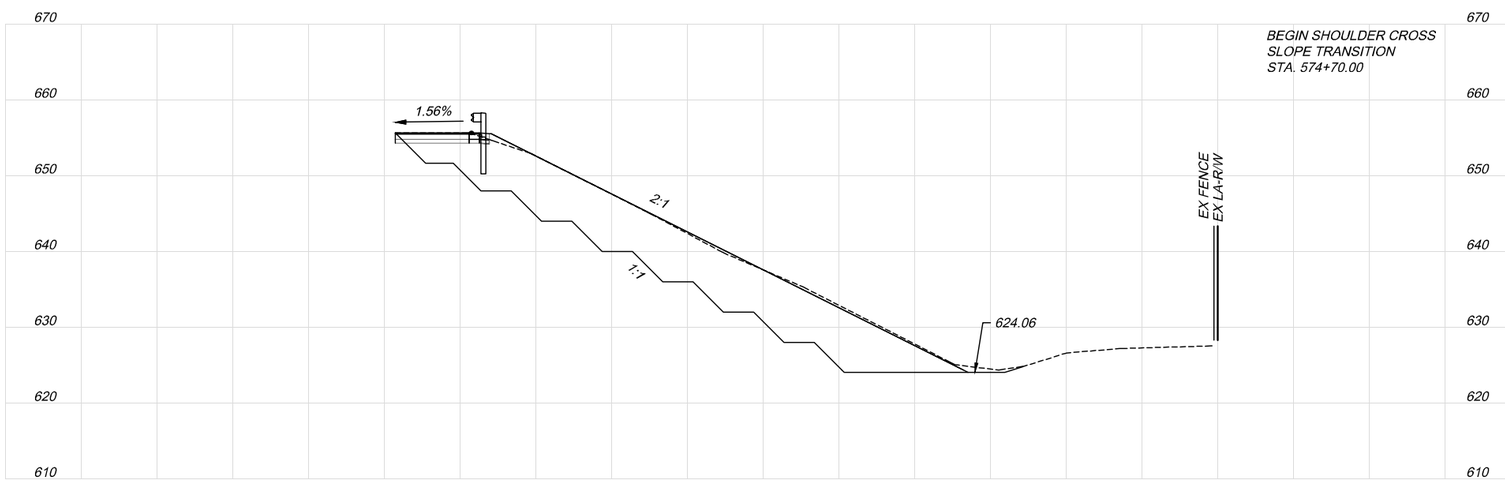

574+50.00

NOTE: ACTUAL BENCHING ELEVATIONS MAY VARY FROM THE ELEVATIONS SHOWN IN THE CROSS SECTIONS.

SCALE 20:1

N:\0716\06855 OTIC GES 99-20-04\PROD\TSK\Task 2\Plans\Roadway\Sheets\99-20-04_XS001.dwg; (7); 6/03/21 - 2:44pm

DESIGN AGENCY
ms consultants, inc.
333 E. Federal Street
Youngstown, Ohio 44503

NO	REVISIONS	BY	DATE
2	ADDENDUM NO. 2	SWG	5/28/21
-	-	-	-
-	-	-	-

DESIGNED	CHECKED
SWG	SWG
DRAWN	IN CHARGE
JDK	MFM

SLOPE REPAIR EB CROSS SECTION
STA. 574+50 TO STA. 575+00
M.P. 73.80 TO M.P. 74.00
WOOD COUNTY

PROJECT 70-21-01
DATE: 04/09/2021

15
35

OHIO TURNPIKE AND INFRASTRUCTURE COMMISSION

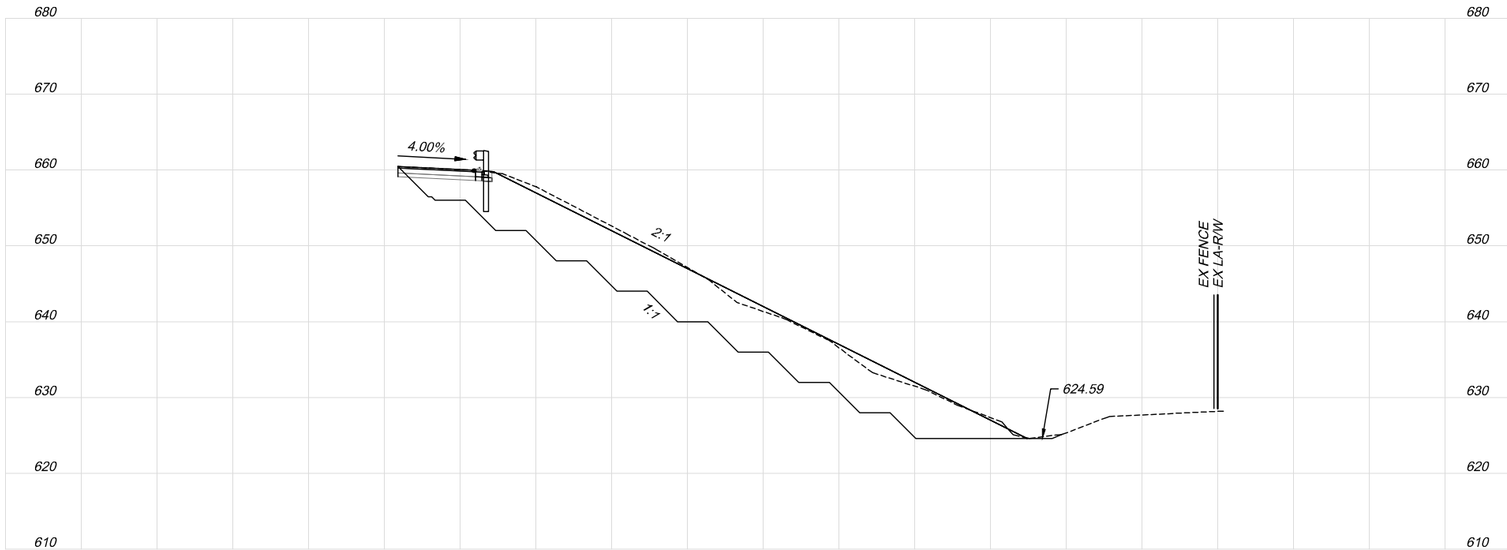

580+00.00

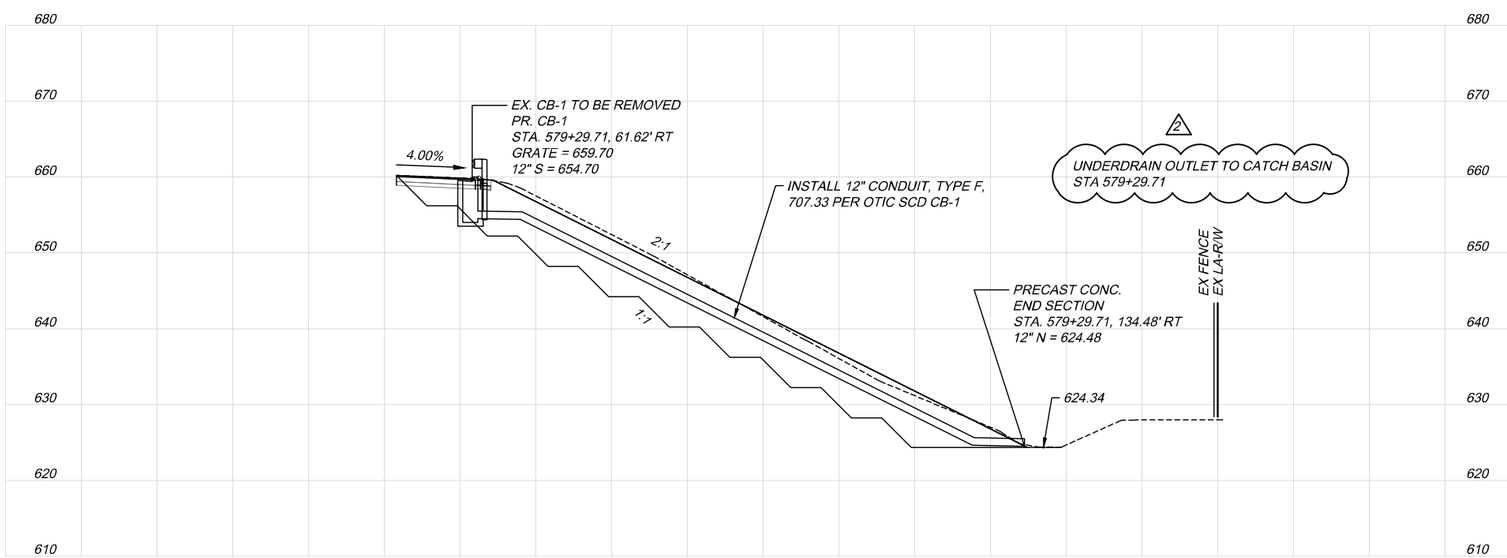

579+50.00

NOTE: ACTUAL BENCHING ELEVATIONS MAY VARY FROM THE ELEVATIONS SHOWN IN THE CROSS SECTIONS.

SCALE 20:1

DESIGN AGENCY
ms consultants, inc.
333 E. Federal Street
Youngstown, Ohio 44503

NO	REVISIONS	BY	DATE
2	ADDENDUM NO. 2	SWG	5/28/21
-	-	-	-
-	-	-	-

DESIGNED	CHECKED
SWG	SWG
DRAWN	IN CHARGE
JDK	MFM

SLOPE REPAIR EB CROSS SECTION
STA. 579+50 TO STA. 580+00
M.P. 73.80 TO M.P. 74.00
WOOD COUNTY

PROJECT 70-21-01
DATE: 04/09/2021

20
35

OHIO TURNPIKE AND INFRASTRUCTURE COMMISSION

N:\0716\06855 OTIC GES 99-20-04\PROD\TSK\Task 2\Plans\Roadway\Sheets\99-20-04_XS001.dwg; (12); 6/03/21 - 2:45pm

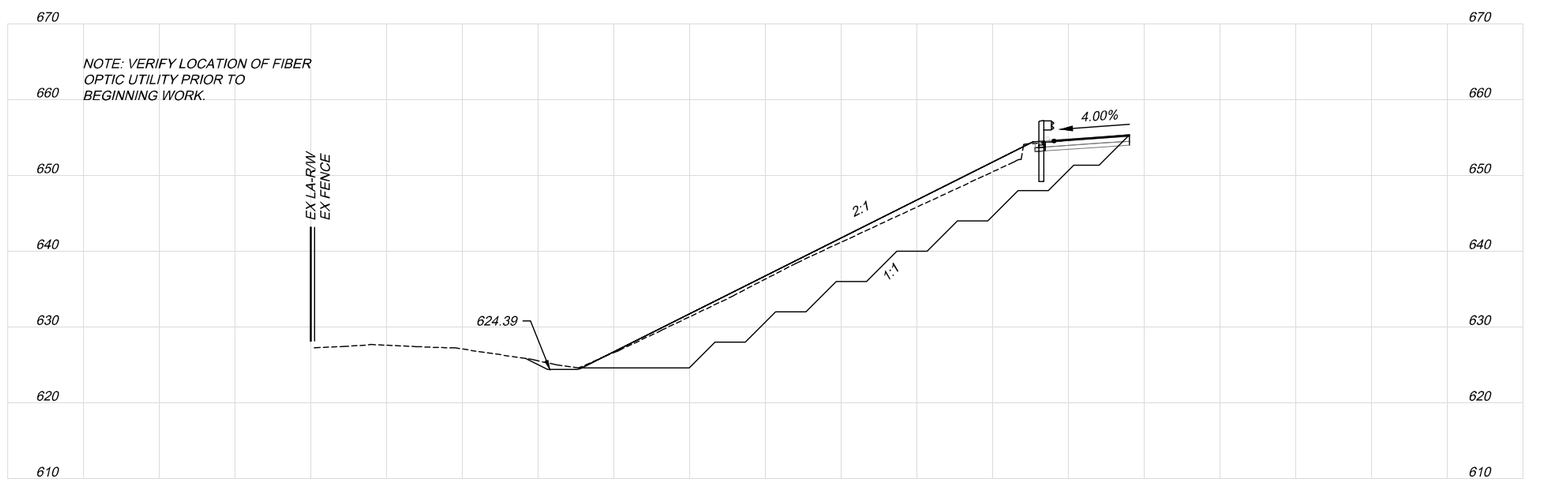

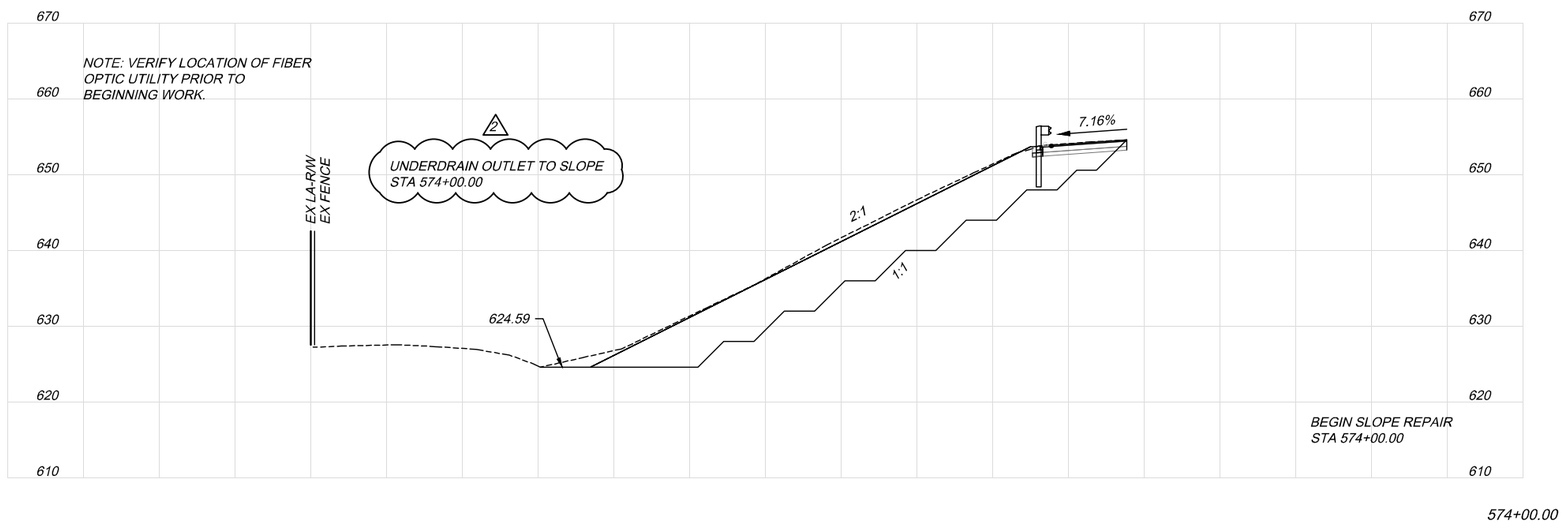

NOTE: ACTUAL BENCHING ELEVATIONS MAY VARY FROM THE ELEVATIONS SHOWN IN THE CROSS SECTIONS.

SCALE 20:1

N:\0116\06855 OTIC GES 99-20-04\PRODITSK\Task 2\Plans\Roadway\Sheets\99-20-04_XS002.dwg; (1); 6/03/21 - 2:46pm

DESIGN AGENCY
ms consultants, inc.
333 E. Federal Street
Youngstown, Ohio 44503

NO	REVISIONS	BY	DATE
2	ADDENDUM NO. 2	SWG	5/28/21
-	-	-	-
-	-	-	-

DESIGNED	CHECKED
SWG	SWG
DRAWN	IN CHARGE
JDK	MFM

SLOPE REPAIR WB CROSS SECTION
STA. 574+00 TO STA. 574+50
M.P. 73.80 TO M.P. 74.00
WOOD COUNTY

PROJECT 70-21-01
DATE: 04/09/2021

OHIO TURNPIKE AND INFRASTRUCTURE COMMISSION

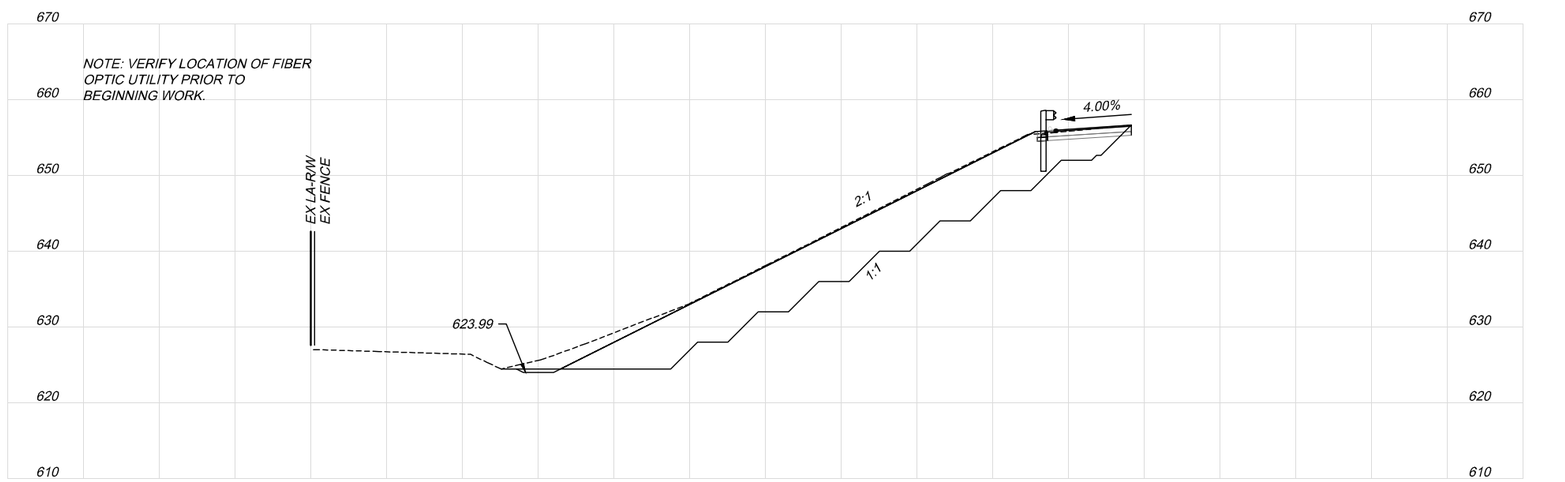

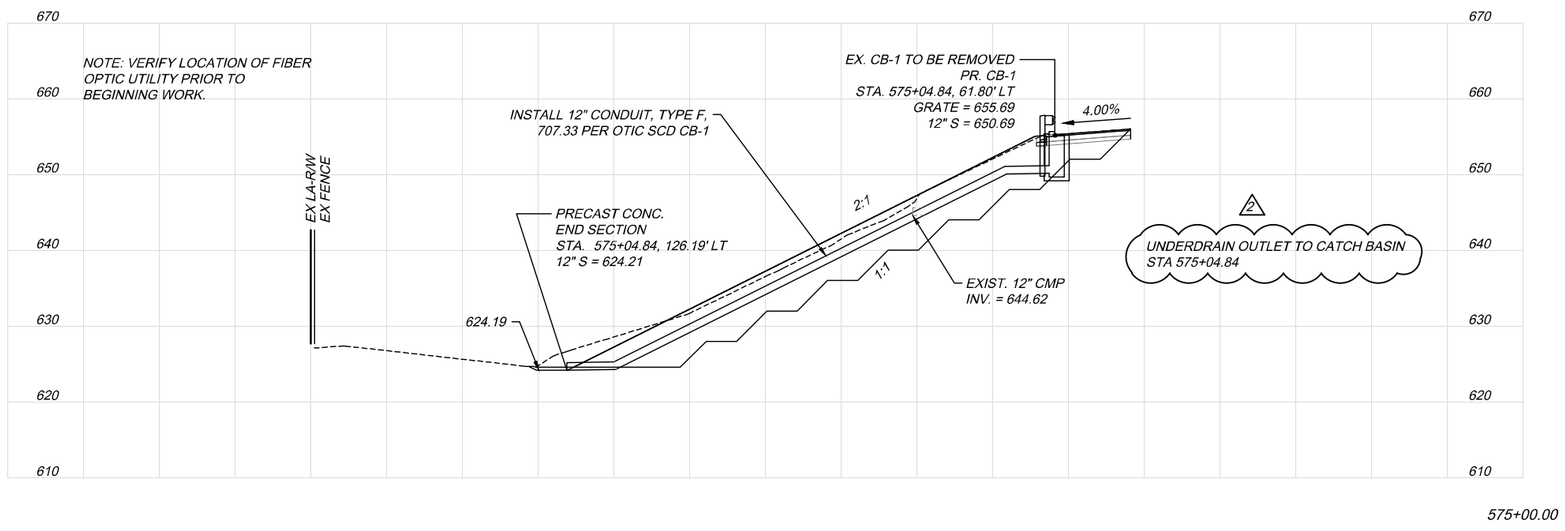

NOTE: ACTUAL BENCHING ELEVATIONS MAY VARY FROM THE ELEVATIONS SHOWN IN THE CROSS SECTIONS.

SCALE 20:1

DESIGN AGENCY
ms consultants, inc.
333 E. Federal Street
Youngstown, Ohio 44503

NO	REVISIONS	BY	DATE
2	ADDENDUM NO. 2	SWG	5/28/21
-	-	-	-
-	-	-	-

DESIGNED	CHECKED
SWG	SWG
DRAWN	IN CHARGE
JDK	MFM

SLOPE REPAIR WB CROSS SECTION
STA. 575+00 TO STA. 575+50
WOOD COUNTY
M.P. 73.80 TO M.P. 74.00

PROJECT 70-21-01
DATE: 04/09/2021

25
35

OHIO TURNPIKE AND INFRASTRUCTURE COMMISSION

N:\0116\06855 OTIC GES 99-20-04\PRODITSK\Task 2\Plans\Roadway\Sheets\99-20-04_XS002.dwg; (2); 6/03/21 - 2:47pm

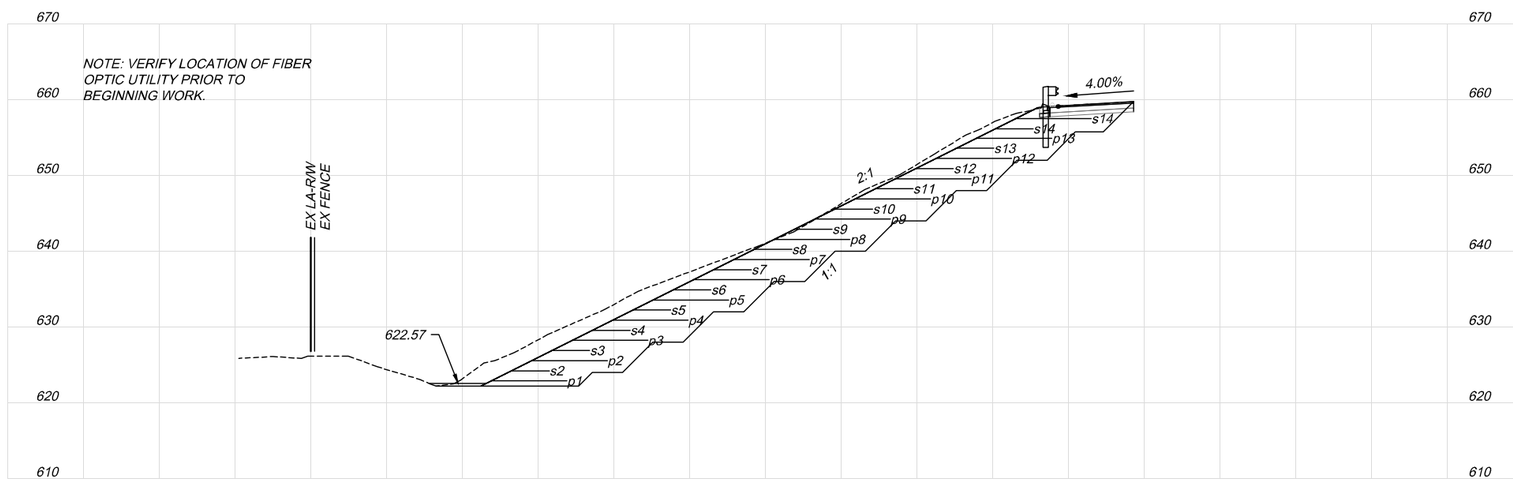

579+00.00

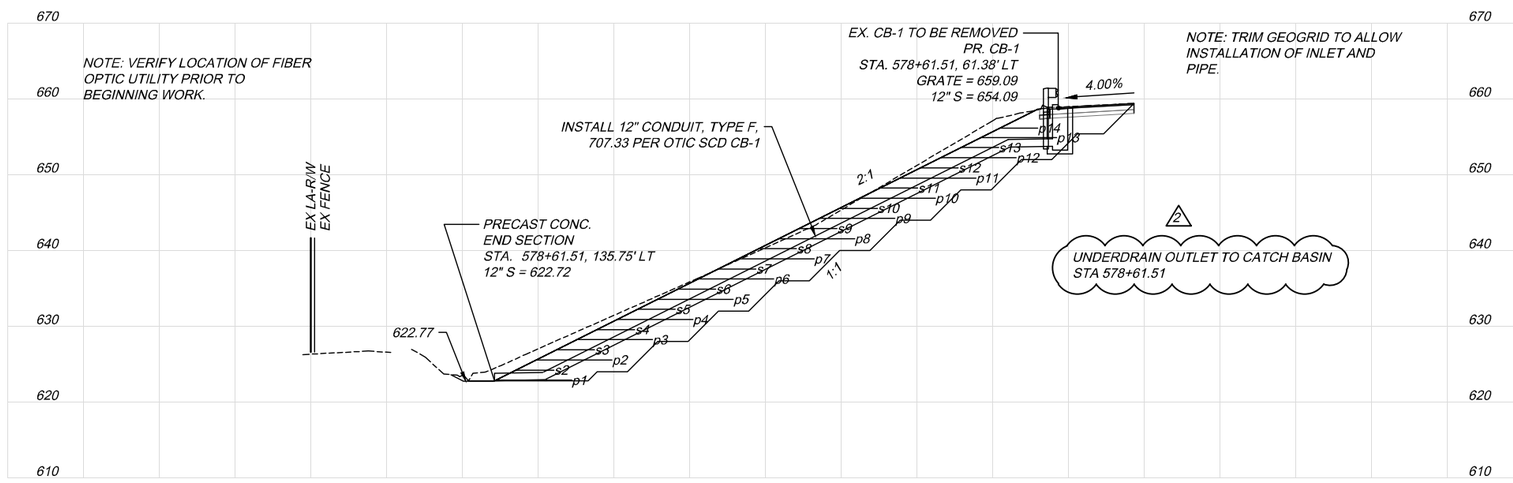

578+50.00

LEGEND

p# - PRIMARY REINFORCEMENT LAYER (SEE SHEET 4 FOR ELEVATION AND STATION RANGE)

s# - SECONDARY REINFORCEMENT LAYER (SEE SHEET 4 FOR ELEVATION AND STATION RANGE)

NOTE: ACTUAL BENCHING ELEVATIONS MAY VARY FROM THE ELEVATIONS SHOWN IN THE CROSS SECTIONS.

SCALE 20:1

DESIGN AGENCY
ms consultants, inc.
333 E. Federal Street
Youngstown, Ohio 44503

NO	REVISIONS	BY	DATE
2	ADDENDUM NO. 2	SWG	5/28/21
-	-	-	-
-	-	-	-

DESIGNED	CHECKED
SWG	SWG
DRAWN	IN CHARGE
JDK	MFM

SLOPE REPAIR WB CROSS SECTION
STA. 578+50 TO STA. 579+00
M.P. 73.80 TO M.P. 74.00
WOOD COUNTY

PROJECT 70-21-01
DATE: 04/09/2021

OHIO TURNPIKE AND INFRASTRUCTURE COMMISSION

N:\0116\06855 OTIC GES 99-20-04\PRODITSK\Task 2\Plans\Roadway\Sheets\99-20-04_XS002.dwg; (6); 6/03/21 - 2:48pm

SEQUENCE OF SLOPE REPAIR CONSTRUCTION

NOTES

1. THE GENERAL AREA OF SLOPE FAILURE REPAIR IS SHOWN ON AND IN THE PLANS AND MAY BE ADJUSTED BY THE CHIEF ENGINEER TO ENSURE THE INTENT OF THE PLANS ARE ACHIEVED.

2. THE CROSS-SECTIONAL AREA SHOWN OF THE EXISTING SIDE SLOPE EMBANKMENT MATERIAL TO BE REMOVED AND REPLACED AND THE LIMITS OF CORRECTIVE WORK ARE AS SHOWN ON THE PLANS.

3. THE EXISTING SLOPE SHALL BE BENCHED AS SHOWN ON THE PLANS STARTING FROM THE TOP AT ROADWAY ELEVATION AND PROCEEDING TO THE BOTTOM AT TOE OF SLOPE. EMBANKMENT REPLACEMENT MATERIAL SHALL BE FURNISHED, PLACED AND COMPACTED IN ACCORDANCE WITH ITEM 203, STARTING FROM THE BOTTOM AT TOE OF SLOPE AND PROCEDING TO THE TOP. ALL EMBANKMENT MATERIAL SUPPLIED UNDER ITEM 203 - EMBANKMENT, SHALL BE TESTED BY THE CONTRACTOR TO ENSURE THAT THE MATERIAL CONFORMS TO A-6a OR A-6b SOIL CLASSIFICATION, AND HAS A MINIMUM EFFECTIVE COHESION OF 250 PSF, A MINIMUM EFFECTIVE FRICTION ANGLE OF 28 DEGREES, AND HAS A MAXIMUM DRY DENSITY OF 110 PCF OR GREATER AS DETERMINED BY ODOT SUPPLEMENT 1015. THE CONTRACTOR WILL REUSE THE EXISTING SLOPE MATERIAL PROVIDED THE EXISTING SLOPE MATERIAL MAY BE REWORKED AND MODIFIED, AT THE CONTRACTOR'S EXPENSE, TO MEET THE REQUIREMENTS SPECIFIED ABOVE. BORROW MATERIAL WILL ONLY BE USED IF THE CONTRACTOR CAN PROVE TO THE CHIEF ENGINEER AND/OR ITS REPRESENTATIVE THAT THE EXISTING SITE MATERIAL CANNOT BE REUSED. ALL EXCAVATED MATERIAL NOT REUSED, SHALL BE DISPOSED OF IN ACCORDANCE WITH SP 105. 2

4. BENCHING AND LIMITS OF CORRECTIVE WORK SHOWN ON THE PLANS MAY BE MODIFIED IN ACCORDANCE WITH THE FIELD CONDITIONS TO ENSURE THAT THE EMBANKMENT MATERIAL IS LOCATED AND REMOVED AND REPLACED TO THE DIMENSIONS SHOWN ON THE PLANS OR AS DIRECTED BY THE CHIEF ENGINEER.

5. THE TOP 6 INCHES OF EMBANKMENT REMAINING AFTER REMOVAL TO THE SPECIFIED DEPTH SHALL BE COMPACTED TO A MINIMUM DENSITY OF 98% (AASHTO T-99) PRIOR TO PLACING NEW EMBANKMENT MATERIAL. AFTER REMOVAL OF THE SIDE SLOPE EMBANKMENT AND PRIOR TO RECONSTRUCTION OF THE SIDE SLOPE EMABANKMENT PER THE PLAN REQUIREMENTS PROOF ROLL THE TOE OF THE SLOPE. REMOVE ANY SOFT SOILS FROM AREAS IDENTIFED BY PROOF ROLLING AND REPLACE THE EXCAVATED MATERIAL WITH AFOREMENTIONED SPECIFIED EMBANKMENT MATERIAL AND COMPACT THE BACKFILLED EMBANKMENT MATERIAL IN ACCORDANCE WITH ITEM 203.

6. THE SURFACE OF BENCHED AREAS SHALL BE SLOPED PERPENDICULAR TO THE FACE OF THE SLOPE TO DRAIN DURING INCLEMENT WEATHER TO MINIMIZE SATURATION OF THE CONSTRUCTED BENCHES.

7. PLACEMENT AND COMPACTION OF EMBANKMENT SHALL BE DONE IN NO MORE THAN 8 " LIFTS. FOR REINFORCING LAYER PLACEMENT, PLACE THE PRINCIPAL STRENGTH DIRECTION PERPENDICULAR TO THE FACE OF THE SLOPE. SECURE REINFORCEMENT WITH RETAINING PINS TO PREVENT MOVEMENT DURING FILL PLACEMENT. REINFORCEMENT EDGES PERPENDICULAR TO THE SLOPE SHALL BE BUTTED. PLACE THE REQUIRED FILL LIFT THICKNESS ON THE REINFORCEMENT USING CONSTRUCTION EQUIPMENT OPERATING ON PREVIOUSLY PLACED FILL OR NATURAL GROUND. MAINTAIN A MINIMUM OF 8 INCHES OF FILL BETWEEN THE REINFORCEMENT AND THE WHEELS OR TRACKS OF CONSTRUCTION EQUIPMENT. COMPACT FILL MATERIAL ON THE REINFORCEMENT USING A RUBBER-TIRED OR SMOOTH DRUM ROLLER. DO NOT USE A SHEEPSFOOT ROLLER TO COMPACT FILL ON THE REINFORCEMENT. WHEN PLACING AND COMPACTING THE BACKFILL MATERIAL, CARE SHALL BE TAKEN TO AVOID ANY DEFORMATION OR MOVEMENT OF THE REINFORCEMENT.

8. THE SLOPE REPAIR SEQUENCE OF CONSTRUCTION SHOWN ON THIS SHEET CORRESPONDS TO THE SLOPE REPAIR TYPICAL ON SHEETS 6 AND 7. THE REPAIR SEQUENCE IN OTHER AREAS SHALL BE CONSTRUCTED IN A SIMILAR SEQUENTIAL ORDER. LIMIT THE SLOPE REPAIR SEQUENCE TO A LONGITUDINAL SEGMENT HAVING A LENGTH THAT CAN BE COMPLETED WITHIN A REASONABLE PERIOD OF TIME AND MAY BE ADJUSTED BY THE ENGINEER, WHICH INCLUDES BOTH BENCHING FROM TOP TO BOTTOM, AND PLACEMENT AND COMPACTION OF EMBANKMENT FROM BOTTOM TO TOP, TO MINIMIZE DAMAGE OF CONSTRUCTION FROM EXPOSURE TO INCLEMENT WEATHER. 2

9. AFTER THE TEMPORARY PORTABLE CONCRETE BARRIER HAS BEEN INSTALLED THE CONTRACTOR SHALL REMOVE THE GUARDRAIL ALONG THE SLOPE REPAIR AREA.

10. ALTHOUGH TYPICAL SECTIONS AND CROSS SECTIONS ARE PROVIDED INDICATING SUGGESTED BENCHING OF THE EMBANKMENT FOUNDATION THROUGHOUT THE PROJECT, NO WAIVER OF SPECIFICATION IS INTENDED. ALL SIDE SLOPE EMBANKMENT AREAS SHALL BE BENCHED AS SET FORTH IN ITEM 203, OR AS DIRECTED BY THE CHIEF ENGINEER. NO ADDITIONAL PAYMENT WILL BE MADE FOR BENCHING UNDER ITEM 203.

11. THE SEQUENCE OF BENCHING WORK CAN BE MODIFIED BY THE CONTRACTOR AT HIS DISCRETION AND AT THE APPROVAL OF THE CHIEF ENGINEER.

GENERAL NOTES

SAFETY AND CONTINUITY OF OPERATIONS OF TRAFFIC ON THE OHIO TURNPIKE SHALL BE OF THE UTMOST IMPORTANCE AND SHALL AT ALL TIMES BE PROTECTED AND SAFEGUARDED. THE CONTRACTOR SHALL DAILY, NOT LATER THAN 12 O'CLOCK NOON, INFORM THE CHIEF ENGINEER AS TO HIS OPERATIONS AND METHOD OF WORK FOR THE FOLLOWING DAY. WHENEVER SUCH WORK, IN THE OPINION OF THE CHIEF ENGINEER, MAY AFFECT THE SAFETY OF TRAFFIC ON THE OHIO TURNPIKE, THE METHOD OF DOING SUCH WORK SHALL BE SUBMITTED TO THE CHIEF ENGINEER FOR APPROVAL, WITHOUT WHICH IT SHALL NOT BE COMMENCED OR PROSECUTED. ANY REQUEST FOR WORK INVOLVING LANE CLOSURE(S) MUST BE SUBMITTED ON AN APPROVED LANE CLOSURE REQUEST FORM SUPPLIED BY THE COMMISSION.

EXISTING UTILITIES

AT LEAST TWO WORKING DAYS PRIOR TO COMMENCING CONSTRUCTION OPERATIONS, THE CONTRACTOR SHALL CONTACT THE OHIO UTILITIES PROTECTION SERVICE AND THE OWNERS OF ANY UNDERGROUND UTILITY FACILITY IN THE AREA FOR APPROPRIATE MARKING. THE CONTRACTOR SHALL BE AWARE THAT WITHIN THE PROJECT LIMITS, QWEST/CENTURYLINK AND THE OHIO TURNPIKE HAVE FIBER OPTIC CABLES RUNNING ALONG THE NORTH SIDE OF THE TURNPIKE AND IN THE MEDIAN ON THE WESTBOUND SIDE.

AT LEAST TWO WORKING DAYS PRIOR TO COMMENCING ANY CONSTRUCTION OPERATIONS IN AN AREA WHICH MAY INVOLVE EXISTING UNDERGROUND LIGHTING OR O.T.I.C. COMMUNICATIONS FACILITIES, THE CONTRACTOR SHALL NOTIFY:

WESTERN DIVISION TRADES
OHIO TURNPIKE AND
INFRASTRUCTURE COMMISSION
682 PROSPECT ST,
BEREA, OHIO 44017
440-971-2731

A CENTURYLINK FIBER OPTIC CABLE IS BURIED ADJACENT TO THE RIGHT-OF-WAY FENCE OF THE WESTBOUND ROADWAY AND IS ENCASED UNDERGROUND AT MAINLINE STRUCTURES AS SHOWN ON THE PLANS. EXTREME CARE MUST BE TAKEN BY THE CONTRACTOR TO PRESERVE AND PROTECT THIS CABLE DURING ALL PHASES OF CONSTRUCTION. SPECIAL CARE SHALL BE EXERCISED DURING OUTSIDE SHOULDER REPAIR AND IMPROVEMENTS TO DRAINAGE OUTLETS AS WELL AS EMBANKMENT MODIFICATIONS. ANY EXCAVATION IN THIS AREA FOR ANY REASON IS NOT TO BE PERFORMED WITHOUT CENTURYLINK FIRST LOCATING THE CABLE. AFTER THE CABLE HAS BEEN LOCATED BY CENTURYLINK, THE CONTRACTOR SHALL EXCAVATE TO WITHIN TWELVE INCHES (12") OF THE CABLE DEPTH AS PROVIDED. A CENTURYLINK REPRESENTATIVE WILL THEN HAND DIG TO EXPOSE THE CABLE. THE CONTRACTOR IS REQUIRED TO WORK AROUND THE INSTALLED CABLE WITH THE CABLE REMAINING IN PLACE.

CENTURYLINK SHALL BE NOTIFIED BY THE CONTRACTOR A MINIMUM OF TWO (2) DAYS PRIOR TO ANY EXCAVATION OVER ITS LINES AND/OR LOCATING THE CABLE OR ANY WORK IN THE VICINITY OF THE CABLE. THE FOLLOWING SHALL BE CONTACTED FOR LOCATING THE CABLE:

DOUG HOLLOWAY
OFFICE: (216) 426-6010
MOBILE: (216) 906-6284

ODOT 2016 SPECIFICATIONS

THE STANDARD SPECIFICATIONS OF THE STATE OF OHIO, DEPARTMENT OF TRANSPORTATION, INCLUDING CHANGES AND SUPPLEMENTAL SPECIFICATIONS LISTED IN THE PROPOSAL SHALL GOVERN THIS IMPROVEMENT.

GEOTECHNICAL ENGINEERING REPORT

A GEOTECHNICAL ENGINEERING REPORT PREPARED BY NATIONAL ENGINEERING AND ARCHITECTURAL SERVICES, INC. (NEAS) AND A DESIGN MEMO PREPARED BY NEAS DATED APRIL 08, 2021 ARE AVAILABLE TO ASSIST THE CONTRACTOR IN EVALUATION EXISTING CONDITIONS.

THE REPORT INCLUDES BORING LOGS, LABORATORY TESTING, ANALYSES, AND RECOMMENDATIONS. INDICATED STRATA BOUNDARIES SHOWN ON THE BORING LOGS ARE BASED ON ENGINEERING INTERPRETATIONS OF ALL AVAILABLE SUBSURFACE INFORMATION AND MAY NOT REFLECT THE ACTUAL VARIATIONS IN SUBSURFACE CONDITIONS BETWEEN BORINGS AND RECOVERED SAMPLES.

THE REPORT AND DESIGN MEMO ARE AVAILABLE FOR THE CONTRACTOR'S INFORMATION, BUT ARE NOT A WARRANT OF SUBSURFACE CONDITIONS. THE CONTRACTOR MUST DRAW HIS OWN CONCLUSIONS OF THE SUBSURFACE CONDITIONS DEPICTED BY THE INFORMATION.

ITEM 204 - PROOF ROLLING

THE CONTRACTOR IS TO PROOF ROLL THE BASE OF THE BOTTOM BENCH TO VERIFY IT MEETS THE COMPACTION REQUIREMENTS AS STATED IN THE SEQUENCE OF CONSTRUCTION. IN THE EVENT THE SUBGRADE DOES NOT MEET THE REQUIRED COMPACTION, CONTINGENCY QUANTITIES OF EXCAVATION AND EMBANKMENT ARE INCLUDED TO FACILITATE REMOVAL OF THE EXISTING SUBGRADE AND REPLACEMENT WITH ACCEPTABLE MATERIAL. THE LOCATION WILL THEN BE PROOF ROLLED AGAIN TO VERIFY THE REQUIRED COMPACTION HAS BEEN ATTAINED.

THE FOLLOWING QUANTITIES HAVE BEEN CARRIED TO THE GENERAL SUMMARY FOR THE ABOVE DESCRIBED WORK.

ITEM 204 - PROOF ROLLING	3 HRS
ITEM 204 - EXCAVATION OF SUBGRADE	4444 CU. YD.
ITEM 204 - EMBANKMENT, AS PER PLAN	4444 CU. YD.

ITEM 201 - CLEARING AND GRUBBING, AS PER PLAN

CLEARING AND GRUBBING HAS BEEN ADDED TO THE PLANS TO FACILITATE REMOVAL OF ALL TREES AND SHRUBS, REGARDLESS OF SIZE, AND OTHER DEBRIS WITHIN THE PROJECT LIMITS OF THE SLOPE REPAIR. AN APPROXIMATE AREA OF 18,910 S.Y. IS PROVIDED FOR ESTIMATING PURPOSES BUT MAY BE ADJUSTED BY THE CHIEF ENGINEER TO ENSURE THAT THE PLAN INTENT IS MET AND THE CONTRACTOR IS PROVIDED A REASONABLE WORK AREA. ALL CLEARING AND GRUBBING SHALL REMAIN WITHIN THE TURNPIKE RIGHT OF WAY. ALL LABOR, MATERIALS, EQUIPMENT, AND INCIDENTALS NEEDED TO COMPLETE THE WORK SHALL BE INCLUDED IN THE LUMP SUM BID PRICE FOR THIS ITEM.

ITEM 203 - BORROW, AS PER PLAN

IT IS UNKNOWN IF THE EXISTING EMBANKMENT SOILS ON SITE MEET THE REQUIREMENTS OF ITEM 203 - EMBANKMENT, AS PER PLAN. THE QUANTITY OF ITEM 203 - BORROW, AS PER PLAN AS SHOWN IN THE GENERAL SUMMARY HAS BEEN INCLUDED IN THE PLANS FOR USE BY THE CONTRACTOR, AT THE DIRECTION OF THE CHIEF ENGINEER, TO REPLACE EXISTING EMBANKMENT MATERIAL THAT DOES NOT MEET THE REQUIREMENTS AS SPECIFIED IN THE PLANS. THE CONTRACTOR WILL REUSE THE EXISTING EXCAVATED SLOPE MATERIAL THAT MEETS, OR CAN BE REWORKED TO MEET, THE REQUIREMENTS OF ITEM 203 EMBANKMENT, AS PER PLAN. BORROW MATERIAL WILL ONLY BE USED IF THE CONTRACTOR CAN PROVE TO THE CHIEF ENGINEER AND/OR IT'S REPRESENTATIVE THAT THE EXISTING MATERIAL CANNOT BE REUSED. PRIOR TO PROVIDING BORROW MATERIAL, THE CONTRACTOR SHALL SUPPLY THE COMMISSION WITH THE BORROW LOCATIONS SO THAT THE BORROW MATERIAL CAN BE TESTED BY THE COMMISSION. BORROW MATERIAL SUPPLIED SHALL BE TESTED TO ENSURE THAT THE BORROW MATERIAL CONFORMS TO A-6a OR A-6b SOIL CLASSIFICATIONS, MEETS THE REQUIREMENTS OF ITEM 203 - EMBANKMENT, AS PER PLAN, AND CONFORMS TO ALL APPLICABLE PLAN REQUIREMENTS AND ANY APPLICABLE PORTIONS OF ITEM 203.

THIS ITEM SHALL ALSO INCLUDE THE REMOVAL AND DISPOSAL, IN ACCORDANCE WITH SP 105, OF EMBANKMENT MATERIAL THAT IS TESTED AND DOES NOT CONFORM TO SPECIFIED PLAN REQUIREMENTS.

PAYMENT FOR THIS ITEM SHALL INCLUDE ALL LABOR, EQUIPMENT, MATERIALS, AND INCIDENTALS NECESSARY TO COMPLETE THIS ITEM INCLUDING THE REMOVAL, DISPOSAL AND REPLACEMENT OF EXISTING EMBANKMENT MATERIAL THAT DOES NOT CONFORM TO PLAN REQUIREMENTS.

QUANTITY RESTRICTIONS SPECIFIED UNDER THE INSTRUCTIONS TO BIDDERS, ARTICLE 2.8.6, 2.8.7, AND 2.8.8 OF THE CONTRACT, ARE WAIVED FOR ITEM 203 - EMBANKMENT, AS PER PLAN AND FOR ITEM 203 - BORROW, AS PER PLAN. CONTRACTOR SHALL BE PAID FOR ACTUAL QUANTITY PLACED AND ACCEPTED AT THE UNIT PRICE BID AND NO ADDITIONAL COMPENSATION SHALL BE GRANTED.

ITEM 203 - BORROW, AS PER PLAN, REINFORCED EMBANKMENT 2

THIS ITEM OF WORK SHALL MEET THE REQUIREMENTS OF ITEM 203 - BORROW, AS PER PLAN AS WELL AS THE REQUIREMENT OF ODOT SUPPLEMENTAL SPECIFICATION 863.

QUANTITY RESTRICTIONS SPECIFIED UNDER THE INSTRUCTIONS TO BIDDERS, ARTICLE 2.8.6, 2.8.7, AND 2.8.8 OF THE CONTRACT, ARE WAIVED FOR THIS ITEM. CONTRACTOR SHALL BE PAID FOR ACTUAL QUANTITY PLACED AND ACCEPTED AT THE UNIT PRICE BID AND NO ADDITIONAL COMPENSATION SHALL BE GRANTED.

ITEM 203 - EMBANKMENT, AS PER PLAN

THE EMBANKMENT MATERIAL FOR THIS PROJECT SHALL MEET NATURAL SOILS AS DEFINED IN 703.16.A ~~EXCEPT THAT~~ THE ONLY ACCEPTABLE GROUP CLASSIFICATIONS TO BE USED ARE A-4-a AND A-6-b WITH A MINIMUM COHESION OF 250 PSF AND FRICTION ANGLE OF 28 DEGREES. 2

ITEM 204 - EMBANKMENT, AS PER PLAN

THIS ITEM OF WORK CONSISTS OF MATERIAL TO BE UTILIZED SHOULD THE BASE OF THE BENCHING EXCAVATION NOT MEET PROOF ROLLING REQUIREMENTS. THE MATERIAL UNDER THIS ITEM SHALL MEET THE REQUIREMENTS OF ITEM 203 - EMBANKMENT, ~~AS PER PLAN OR IF ADEQUATE MATERIAL IS NOT FOUND ON SITE IT SHALL ALSO CONSIST OF ITEM 203 - BORROW, AS PER PLAN~~ OR ITEM 203 - BORROW, AS PER PLAN, REINFORCED EMBANKMENT WHERE WITHIN THE REINFORCED EMBANKMENT LIMITS. 2

EXISTING SUBSURFACE DRAINAGE

PROVIDE UNOBSTRUCTED OUTLETS FOR ALL EXISTING UNDERDRAINS ENCOUNTERED DURING CONSTRUCTION.

PROVIDE AN OUTLET PER ODOT STANDARD CONSTRUCTION DRAWING DM-1.1 FOR ALL UNDERDRAINS THAT OUTLET TO A SLOPE. UNDERDRAINS THAT CAN BE CONNECTED TO THE NEW OR EXISTING UNDERDRAINS AT THE END OF THE PROJECT LIMITS AS WELL AS ALL NECESSARY BENDS OR BRANCHES REQUIRED FOR CONNECTION ARE INCLUDED IN THE BASIS OF PAYMENT FOR UNCLASSIFIED PIPE UNDERDRAINS.

THE FOLLOWING ESTIMATED QUANTITIES HAVE BEEN INCLUDED IN THE GENERAL SUMMARY FOR THE WORK NOTED ABOVE:

ITEM 611 - 6" CONDUIT, TYPE F FOR UNDERDRAIN OUTLETS	50 FT.
ITEM 605 - 6" UNCLASSIFIED PIPE UNDERDRAINS	50 FT.

N:\0716\06855 OTIC GES 99-20-04\PROD\TSK\Task 2\Plans\Roadway\Sheets\99-20-04_SEQUENCE & NOTES.dwg; SEQUENCE & GEN NOTES; 6/03/21 - 3:17pm

DESIGN AGENCY
ms consultants, inc.
333 E. Federal Street
Youngstown, Ohio 44503

NO.	REVISIONS	BY	DATE
2	ADDENDUM NO. 2	SWG	5/28/21

DESIGNED SWG | CHECKED SWG | DRAWN MSN | IN CHARGE MFM

SEQUENCE OF CONSTRUCTION AND GENERAL NOTES
WOOD COUNTY
M.P. 73.80 TO M.P. 74.00

PROJECT 70-21-01
DATE: 04/09/2021

OHIO TURNPIKE AND INFRASTRUCTURE COMMISSION

GENERAL NOTES (CONTINUED)

ITEM 863 - REINFORCED EMBANKMENT, AS PER PLAN
THIS WORK SHALL FOLLOW ITEM 863 EXCEPT THAT THE EMBANKMENT UTILIZED FOR THE REINFORCED SLOPE SHALL FOLLOW THE REQUIREMENTS OF ITEM 203 - EMBANKMENT, AS PER PLAN AS WELL AS THE ADDITIONAL REQUIREMENTS SPECIFIED IN SECTION 863.02.B. OF ODOT SS 863.

ITEM 601 - ROCK CHANNEL PROTECTION, TYPE C WITH FILTER, AS PER PLAN
THIS ITEM OF WORK SHALL FOLLOW THE REQUIREMENTS OF 601.09 EXCEPT ONLY A FILTER CONSISTING OF THE SPECIFIED GEOTEXTILE FABRIC WILL BE ALLOWED.

2 NOTES HAVE NOT BEEN REVISED. MOVED FROM SHEET 33

CONTRACTOR STAGING AREA
THE AVAILABLE CONTRACTOR STAGING AREAS WILL BE IN THE INFIELD AREAS OF EXIT 71 . IF A CONTRACTOR CHOOSES A STAGING AREA WITHIN THE TURNPIKE RIGHT OF WAY OTHER THAN WHAT IS INDICATED IN THE PLANS, IT MUST BE SUBMITTED TO THE CHIEF ENGINEER FOR APPROVAL PRIOR TO USE.

THE STAGING AREA SHALL BE MAINTAINED BY THE CONTRACTOR AND RESTORED TO ORIGINAL CONDITION TO THE APPROVAL OF THE ENGINEER PRIOR TO COMPLETION OF ALL WORK.

ITEM 606 - GUARDRAIL, TYPE MGS WITH LONG STEEL POSTS, AS PER PLAN
BECAUSE THE REINFORCED STABILIZED SOIL EMBANKMENT REQUIRES THE USE OF GEOGRID FABRIC WITHIN THE DEPTH LIMITS OF THE LONG GUARDRAIL POSTS, ONLY DRIVEN STEEL POSTS SHALL BE UTILIZED FOR THE PROJECT IN THE CONSTRUCTION OF THE GUARDRAIL WITHIN THE STABILIZED EMBANKMENT LIMITS TO AVOID DAMAGE TO THE GEOGRID MATERIAL. WOOD POSTS WILL NOT BE PERMITTED.

THE GUARDRAIL LIMITS HAVE NOT BEEN SURVEYED AND QUANTITIES AND STATIONS SHOWN IN THE PLAN ARE ESTIMATED. THE CONTRACTOR SHALL SURVEY AND DOCUMENT THE EXISTING GUARDRAIL LIMITS, AND THE REMOVAL AND REPLACEMENT OF THE EXISTING GUARDRAIL, ANCHOR ASSEMBLY, AND BRIDGE TERMINAL ASSEMBLIES SHALL MEET THESE LIMITS. COST TO SURVEY AND DOCUMENT THE EXISTING GUARDRAIL LIMITS IS INCLUDED IN THE LUMP SUM PRICE BID FOR ITEM SP 623 - CONSTRUCTION LAYOUT SURVEY.

ITEM 630 - REMOVAL OF OVERHEAD MOUNTED SIGN AND REERECTION, AS PER PLAN
IN ADDITION TO THE PROVISIONS OF CMS 630, PROPERLY STORE THE SIGN AFTER REMOVAL AT A LOCATION AWAY FROM THE PROJECT SITE. COORDINATE THE SIGN STORAGE LOCATION WITH THE OTIC. A SUGGESTED STORAGE LOCATION IS THE INFIELD AREA AT EXIT 71. REERECT THE SIGN ON THE EXISTING SIGN CANTILEVER SUPPORT AND FOUNDATION ONCE THE SLOPE REMEDIATION ACTIVITIES IN THE AREA OF THE SIGN HAVE BEEN COMPLETED. AT THE DISCRETION OF THE CONTRACTOR, THE EXISTING CANTILEVER SIGN SUPPORT MAY REMAIN ATTACHED TO THE SIGN FOUNDATION. HOWEVER, THE CONTRACTOR IS RESPONSIBLE FOR SUPPORTING THE SIGN STRUCTURE AS NECESSARY TO PREVENT MOVEMENT AND DAMAGE TO THE SIGN STRUCTURE AND FOUNDATION. IT WILL BE THE RESPONSIBILITY OF THE CONTRACTOR TO REPAIR/REPLACE TO THE SATISFACTION OF THE OTIC ANY PORTION OF THE SIGN STRUCTURE THAT IS DAMAGED OR BECOMES UNSTABLE AS A RESULT OF THE WORK BEING COMPLETED BY THE CONTRACTOR. ALL WORK AS DESCRIBED IN THIS NOTE SHALL BE INCLUDED IN THE UNIT PRICE BID FOR ITEM 630 - REMOVAL OF OVERHEAD MOUNTED SIGN AND REERECTION, AS PER PLAN.

ITEM 620 - DELINEATOR, POST GROUND MOUNTED, AS PER PLAN
THIS ITEM SHALL BE PER OTIC STANDARD CONSTRUCTION DRAWING TC-3. EXISTING MILEAGE MARKERS ATTACHED TO THE EXISTING DELINEATORS SHALL BE CAREFULLY REMOVED AND REATTACHED TO THE NEW DELINEATOR POST REPLACING THE EXISTING DELINEATOR AT THE SAME LOCATION. THE CONTRACTOR TO VERIFY AND DOCUMENT EACH EXISTING DELINEATOR POST LOCATION. NEW HARDWARE PER ODOT 730.10 WILL BE UTILIZED TO ATTACH THE MILE MARKER TO THE NEW DELINEATOR POST. ALL LABOR, EQUIPMENT, AND MATERIALS NECESSARY TO COMPLETE THE ITEM AS DESCRIBED SHALL BE INCLUDED IN THE BID PRICE PER ITEM 620 - DELINEATOR, POST GROUND MOUNTED, AS PER PLAN.

ITEM 619 - FIELD OFFICE, AS PER PLAN
THE FIELD OFFICE SHALL MEET THE REQUIREMENTS OF ITEM 619, TYPE B FIELD OFFICE WITH THE FOLLOWING EXCEPTIONS;

- THE FIELD OFFICE WILL BE PAID AT THE CONTRACT LUMP SUM PRICE BID, WHICH SHALL BE FULL COMPENSATION FOR FURNISHING AND MAINTAINING FACILITIES, ALL UTILITIES, HEAT ELECTRIC, TELEPHONES, INTERNET, WEEKLY CLEANING AND REMOVAL OF FACILITIES UPON COMPLETION OF THE CONTRACT.

- THERE ARE NO AVAILABLE POWER OR PHONE FACILITIES FOR A FIELD OFFICE LOCATION AT EXIT 71. THE CONTRACTOR TO MAKE NEEDED ARRANGEMENTS TO MEET THE REQUIREMENTS AS STATED FOR THE FIELD OFFICE.

SURVEYING PARAMETERS
PRIMARY PROJECT CONTROL MONUMENTS GOVERN ALL POSITIONING.
PROJECT CONTROL:

POSITIONING METHOD: VRS/GNSS SURVEY. TYPE B MONUMENTS
HORIZONTAL POSITIONING: NAD83(2011)
VERTICAL POSITIONING: NAVD88
SCALE FACTOR: 1.00000000000

CONTINGENCY QUANTITIES
THE CONTRACTOR SHALL NOT ORDER MATERIALS OR PERFORM WORK FOR ITEMS DESIGNATED BY PLAN NOTE TO BE USED "AS DIRECTED BY THE CHIEF ENGINEER" UNLESS AUTHORIZED BY THE CHIEF ENGINEER. THE ACTUAL WORK LOCATION AND QUANTITIES USED FOR SUCH ITEMS SHALL BE INCORPORATED INTO THE FINAL CHANGE ORDER GOVERNING THE COMPLETION OF THIS PROJECT.

ITEM SP 614 - MAINTAINING TRAFFIC, AS PER PLAN
IN ADDITION TO THE REQUIREMENTS OF ITEM SP 614 - MAINTAINING TRAFFIC, THE FOLLOWING SHALL APPLY:

- PROJECT CONSTRUCTION ACCESS POINT

IT IS ANTICIPATED THAT THE CONTRACTOR WILL ACCESS THE PROJECT AREAS FROM THE EASTBOUND MAINLINE ROADWAY AT APPROXIMATELY STA. 558+50 AND FROM THE WESTBOUND MAINLINE ROADWAY AT APPROXIMATELY STA. 553+50. EXISTING STONE DRIVES AND CULVERTS ARE LOCATED AT THE TOE OF SLOPE AT THESE LOCATIONS. THE CONTRACTOR SHALL REMOVE THE GUARDRAIL AND CURBING, AS NEEDED, AND INSTALL A STONE DRIVE TO TRANSITION FROM THE MAINLINE SHOULDER TO THE GRASS/EXISTING GROUND. THE CONTRACTOR SHALL USE PORTABLE BARRIER TO PROTECT THE ACCESS POINT. THE PORTABLE BARRIER SHALL BE IN ACCORDANCE WITH SP 622. THE PORTABLE BARRIER CAN BE STARTED BY LAPPING AT LEAST ONE SECTION OF PORTABLE BARRIER BEHIND THE EXISTING GUARDRAIL AND TAPERING THE REST OUT IN ACCORDANCE WITH MT-95.40. A NEW ANCHOR ASSEMBLY, TYPE T MUST BE INSTALLED AT THE END OF THE EXISTING GUARDRAIL THAT IS EXPOSED TO TRAFFIC WHERE THE OVERLAP OCCURS. UPON COMPLETION OF THE PROJECT, THE CONTRACTOR SHALL REMOVED THE ROUNDED END SECTION FROM THE ANCHOR ASSEMBLY, TYPE T AND RESTORE THE GUARDRAIL AND CURBING. NEW ANCHOR ASSEMBLY, TYPE T AND THE STONE DRIVE MAY REMAIN AT NO ADDITIONAL COST TO THE COMMISSION. ALL LABOR, EQUIPMENT, MATERIALS, PORTABLE BARRIER, ANCHOR ASSEMBLY, TYPE T AND INCIDENTALS NEEDED TO CREATE THE CONSTRUCTION ACCESS POINT SHALL BE CONSIDERED INCIDENTAL TO SP 614.

- PORTABLE CONCRETE BARRIER

THE CONTRACTOR SHALL PROVIDE PORTABLE CONCRETE BARRIER IN ACCORDANCE WITH SP 622. THE PORTABLE BARRIER SHALL BE IN PLACE PRIOR TO CONSTRUCTING THE FINAL BENCH OR REMOVING ANY GUARDRAIL. THE COST OF ALL LABOR, EQUIPMENT, MATERIALS, AND INCIDENTALS NEEDED TO PROVIDE THE PORTABLE BARRIER FOR THIS PROJECT SHALL BE CONSIDERED INCIDENTAL TO THE COST OF ITEM SP 614 MAINTAINING TRAFFIC. PORTABLE BARRIER TAPER RATE AND PLACEMENT SHALL BE IN ACCORDANCE WITH OTIC STANDARD CONSTRUCTION DRAWING TCR-14 AND PLAN TYPICAL SECTIONS. THE ESTIMATED LENGTH OF PORTABLE CONCRETE BARRIER REQUIRED IS 3150 FT., SUBJECT TO ADJUSTMENT BY THE CHIEF ENGINEER.

TEMPORARY TRAFFIC CONTROL NOTES

1 - TEMPORARY TRAFFIC CONTROL FOR THE SLOPE REPAIR FROM M.P. 73.8 TO M.P. 74.0 SHALL UTILIZE OTIC STANDARD DRAWING TCR-1. TCR-2, TCR-14 AND TCR-15 WHEN CLOSING THE RIGHT LANE, EXCEPT DRUM SPACING ALONG TANGENT(S) SHALL BE 50' SPACING.

2 - CONTRACTOR SHALL NOT STAGE OR STORE ANY EQUIPMENT ON THE LANES OR ON THE SHOULDER. EQUIPMENT FOR THE PERFORMANCE OF THE WORK MAY BE PRESENT DURING WORKING HOURS, PROVIDED IT IS DONE IN ACCORDANCE WITH THE OTIC STANDARD DRAWINGS.

3 - EQUIPMENT THAT IS NOT BEING USED TO EXECUTE THE WORK, OR AT THOSE TIMES WHEN THE CONTRACTOR IS NOT PERFORMING WORK, MUST BE SAFELY STORED BEHIND EXISTING GUARDRAIL OR REMOVED FROM THE ROADWAY TO AN OFFSITE LOCATION. AT NO TIME SHALL ANY EQUIPMENT BE LEFT WITHIN THE CLEAR ZONE.

4 - THE OTIC STANDARD DRAWINGS ATTACHED HEREWITH ARE MEANT TO CONVEY THE MINIMUM REQUIREMENTS FOR WORK ZONE SAFETY. THESE STANDARDS ARE TO BE USED BY THE CONTRACTOR WHERE APPLICABLE. DUE TO PROXIMITY OF RAMPS, GUARDRAIL, OR OTHER SUCH ITEMS, THE CHIEF ENGINEER MAY REQUIRE MODIFICATIONS TO THESE ZONES. THIS MAY INCLUDE BUT NOT BE LIMITED TO THE FOLLOWING: LENGTHENING ZONES, MODIFYING TAPER RATES, USE ADDITIONAL SIGNAGE OR OTHER SUCH ITEMS AS MAY BE DEEMED NECESSARY BY THE CHIEF ENGINEER FOR THE SAFETY OF OF THE MOTORING PUBLIC AND CONTRACTORS FORCES.

DESIGN AGENCY
ms consultants, inc.
333 E. Federal Street
Youngstown, Ohio 44503

NO.	REVISIONS	BY	DATE
2	ADDENDUM NO. 2	SWG	5/28/21
-	-	-	-
-	-	-	-

DESIGNED	CHECKED
SWG	SWG
DRAWN	IN CHARGE
SWG	MFM

GENERAL NOTES
WOOD COUNTY
M.P. 73.80 TO M.P. 74.00
PROJECT 70-21-01
DATE: 04/09/2021

OHIO TURNPIKE AND INFRASTRUCTURE COMMISSION

N:\0116\0\06855 OTIC GES 99-20-04\PRODITSK\Task 2\Plans\Roadway\Sheets\99-20-04_NOTES & GENSUM.dwg; Multipurpose Sheet; 6/03/21 - 2:51pm

GENERAL SUMMARY			
ESTIMATED			
QUANTITY			ITEM DESCRIPTION
ITEM	TOTAL	UNIT	
IB. ART. 6	1	LUMP	PREMIUM FOR CONTRACT PERFORMANCE BOND AND PAYMENT BOND
201	1	LUMP	CLEARING AND GRUBBING, AS PER PLAN
202	2883	SQ. YD.	PAVEMENT REMOVED
202	1611	FOOT	CURB REMOVED
202	3937.5	FOOT	GUARDRAIL REMOVED
202	2	EACH	BRIDGE TERMINAL ASSEMBLY REMOVED
202	1	EACH	ANCHOR ASSEMBLY REMOVED, TYPE E
202	1	EACH	ANCHOR ASSEMBLY REMOVED, TYPE T
202	234	FOOT	PIPE REMOVED, 24" AND UNDER
202	4	EACH	CATCH BASIN REMOVED
202	306	FOOT	FENCE REMOVED
203	35693	CU. YD.	EXCAVATION
203	24601	CU. YD.	EMBANKMENT, AS PER PLAN
203	24601	CU. YD.	BORROW, AS PER PLAN *
203	10352	CU. YD.	BORROW, AS PER PLAN, REINFORCED EMBANKMENT *
204	3	HOUR	PROOF ROLLING *
204	4444	CU. YD.	EXCAVATION OF SUBGRADE *
204	4444	CU. YD.	EMBANKMENT, AS PER PLAN
302	675	CU. YD.	ASPHALT CONCRETE BASE, PG64-22 (T=8")
SP 304	584	CU. YD.	AGGREGATE BASE
407	365	GALLON	NON-TRACKING TACK COAT
411	160	CU. YD.	ASPHALT CONCRETE SURFACE COURSE, TYPE 1 (446), PG64-22 (T=2")
601	4.4	CU. YD.	ROCK CHANNEL PROTECTION, TYPE C WITH FILTER, AS PER PLAN
601	4	SQ. YD.	TIED CONCRETE BLOCK MAT, TYPE 1
605	2325	FOOT	6" SHALLOW PIPE UNDERDRAINS WITH GEOTEXTILE FABRIC
605	50	FOOT	6" UNCLASSIFIED PIPE UNDERDRAINS
606	3937.5	FOOT	GUARDRAIL, TYPE MGS WITH LONG STEEL POSTS, AS PER PLAN
606	1	EACH	MGS BRIDGE TERMINAL ASSEMBLY, TYPE 1 WITH LONG STEEL POSTS
606	1	EACH	MGS BRIDGE TERMINAL ASSEMBLY, TYPE 2
606	1	EACH	ANCHOR ASSEMBLY, MGS TYPE E WITH LONG STEEL POSTS
606	1	EACH	ANCHOR ASSEMBLY, MGS TYPE T WITH LONG STEEL POSTS
607	306	FOOT	FENCE, TYPE 47
609	1640	FOOT	ASPHALT CONCRETE CURB, TYPE 1, PG64-22
611	136	FOOT	6" CONDUIT, TYPE F FOR UNDERDRAIN OUTLETS
611	2	EACH	PRECAST REINFORCED CONCRETE OUTLET
SP 611	303	FOOT	12" CONDUIT, TYPE F, 707.33
SP 611	4	EACH	CATCH BASIN NO. CB-1
SP 614	1	LUMP	MAINTAINING TRAFFIC, AS PER PLAN
SP 614	2352	HOURS	ZONE PERSON

GENERAL SUMMARY			
ESTIMATED			
QUANTITY			ITEM DESCRIPTION
ITEM	TOTAL	UNIT	
619	1	LUMP	FIELD OFFICE, AS PER PLAN
620	7	EACH	DELINEATOR, POST GROUND MOUNTED, AS PER PLAN
SP 623	1	LUMP	CONSTRUCTION LAYOUT SURVEY
624	1	LUMP	MOBILIZATION
SP 626	40	EACH	BARRIER REFLECTOR, TYPE A (WHITE)
630	1	EACH	REMOVAL OF OVERHEAD MOUNTED SIGN AND REERECTION, AS PER PLAN
642	0.56	MILE	EDGE LINE, 6", TYPE 1 (WHITE)
659	2064	CU. YD.	TOPSOIL
659	13375	SQ. YD.	SEEDING AND MULCHING, CLASS 2
659	5215	SQ. YD.	SEEDING AND MULCHING, CLASS 3B OR 3C
659	2.60	TON	COMMERCIAL FERTILIZER
659	103	MGALLON	WATER
670	18590	SQ. YD.	SLOPE EROSION PROTECTION MAT, TYPE A
832	51000	EACH	EROSION CONTROL
832	1	LUMP	STORM WATER POLLUTION PREVENTION PLAN
863	8393	SQ. YD.	GEOGRID, TYPE P1
863	4108	SQ. YD.	GEOGRID, TYPE S1
863	10352	CU. YD.	REINFORCED EMBANKMENT, AS PER PLAN
SPECIAL	0.56	MILE	SONIC NAP ALERT PATTERN (SNAP)
SPECIAL	4	EACH	12" PRECAST CONCRETE END SECTION

* PARTIAL CONTINGENCY OR FULL CONTENGENCY QUANTITY TO BE USED AS DIRECTED BY THE CHIEF ENGINEER

DESIGN AGENCY
ms consultants, inc.
333 E. Federal Street
Youngstown, Ohio 44503

NO.	REVISIONS	BY	DATE
2	ADDENDUM NO. 2	SWG	5/28/21

DESIGNED	CHECKED	NO.
SWG	JDK	2
DRAWN	IN CHARGE	
SWG	MFM	

GENERAL SUMMARY

WOOD COUNTY

M.P. 73.8 TO M.P. 74.00

PROJECT 70-21-01

DATE: 04/09/2021

OHIO TURNPIKE

OHIO TURNPIKE AND INFRASTRUCTURE COMMISSION

N:\0160\06855 OTIC GES 99-20-04\PRODITSK\Task 2\Plans\Roadway\Sheets\99-20-04_GENSUM.dwg; Multipurpose Sheet; 6/03/21 - 2:53pm