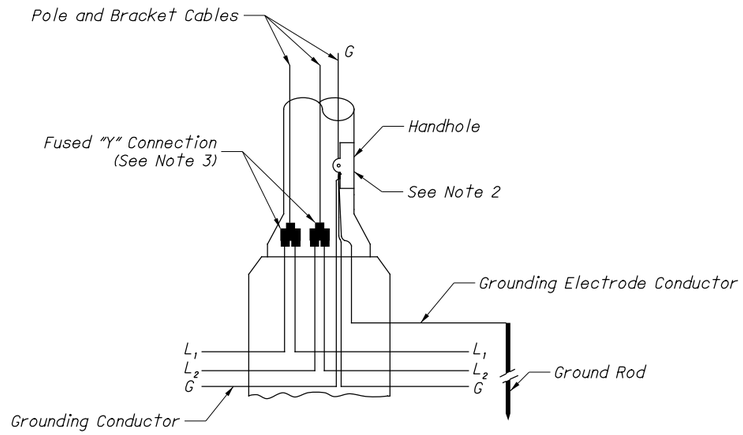

ANCHOR BASE POLE

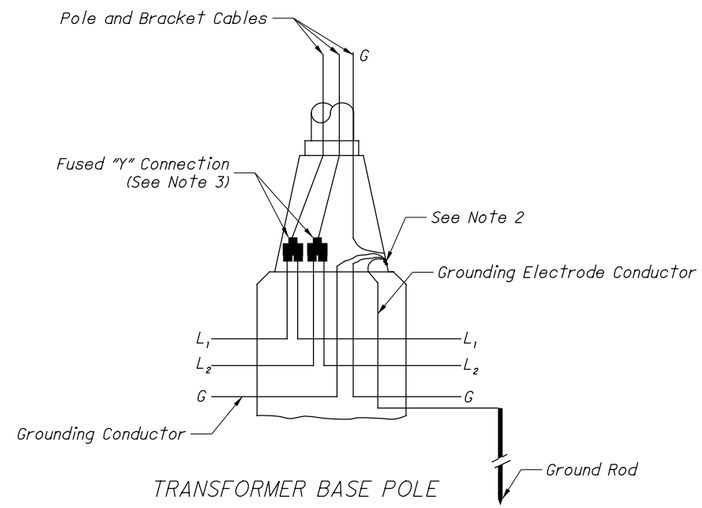

TRANSFORMER BASE POLE

POLE BASE CONNECTIONS, LUMINAIRES WIRED LINE-TO-LINE (240, 480 VOLTS L-L, TYP.)

NOTES:

1. Provide sufficient slack in all cables to permit bringing connections outside of pole base through handhole of anchor base poles or door in transformer base poles.
2. Install ring tongue terminals on grounding conductors and connect to handhole frame on anchor base pole or basewall on transformer base pole with ½" diameter galvanized cap screw.
3. Fuses for connections shall be as follows:

   Any standard midget ferrule type fuse (except glass tube) may be used in this connection.

   Class T fuses rated 600 volts and 10 amperes shall be used unless otherwise specified.

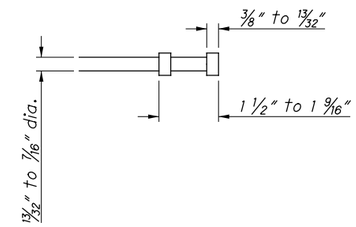

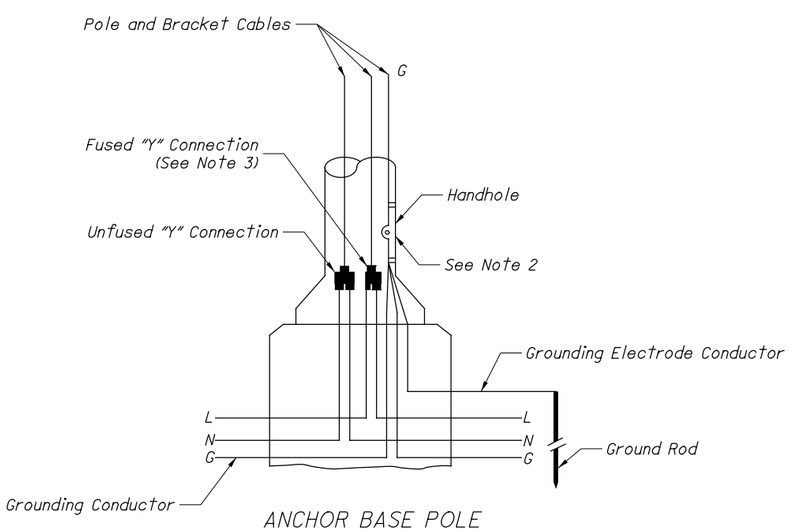

ANCHOR BASE POLE

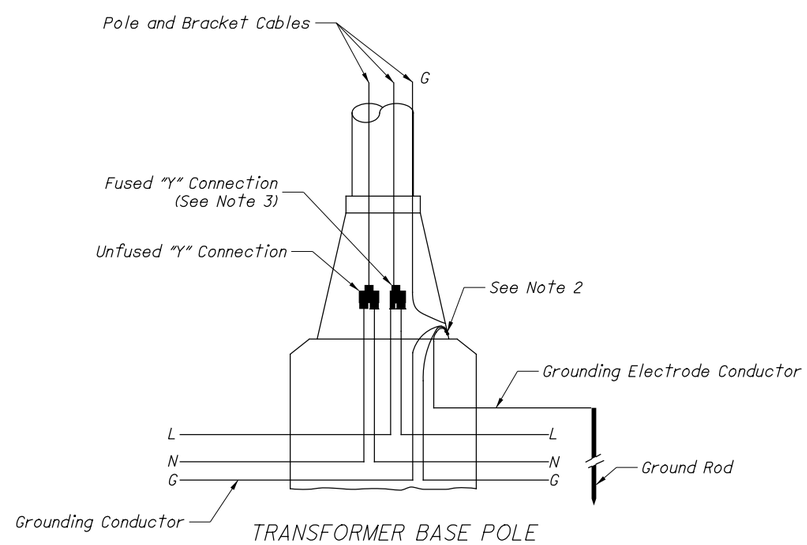

TRANSFORMER BASE POLE

POLE BASE CONNECTIONS, LUMINAIRES WIRED LINE-TO-NEUTRAL (120, 240, 277 VOLTS L-N, TYP.)

THIS DRAWING REPLACES HL-60.11 DATED 01-15-2016.

REVISION DATE 07-21-2017

STATE OF OHIO DEPARTMENT OF TRANSPORTATION ADMINISTRATOR David L. Holstein

STDS. ENGINEER Duemmel

OFFICE OF ROADWAY ENGINEERING

STANDARD ROADWAY CONSTRUCTION DRAWING

POLE WIRING I

SCD NUMBER HL-60.11