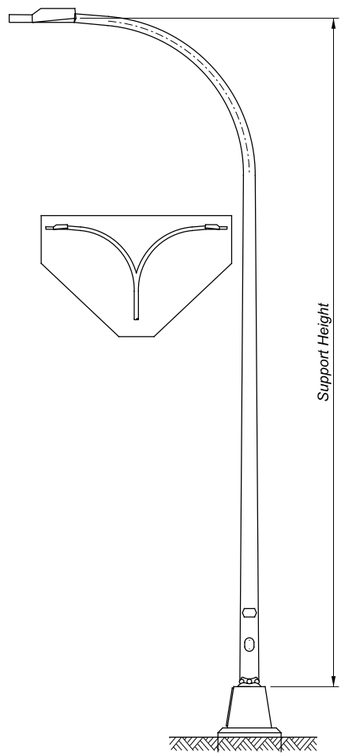

DAVIT

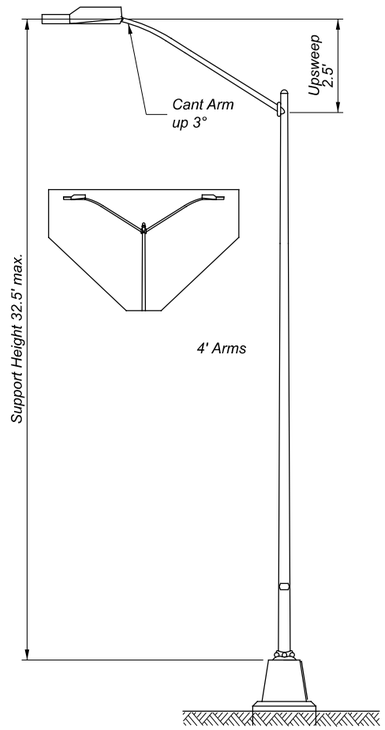

MONOARM

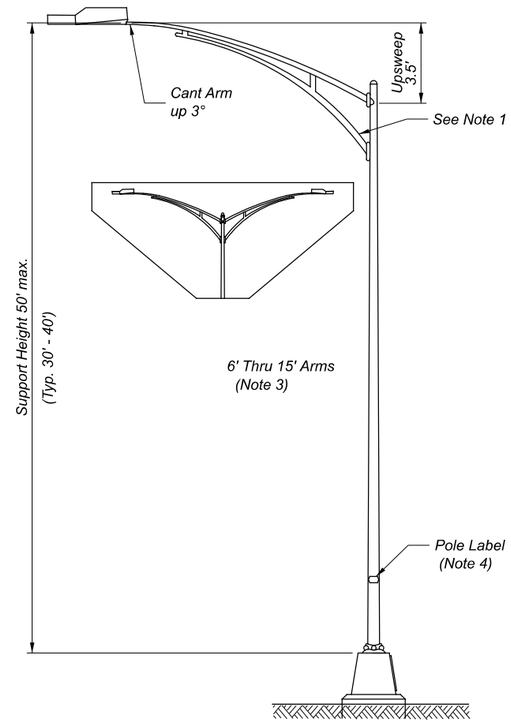

TRUSS ARM LOW RISE

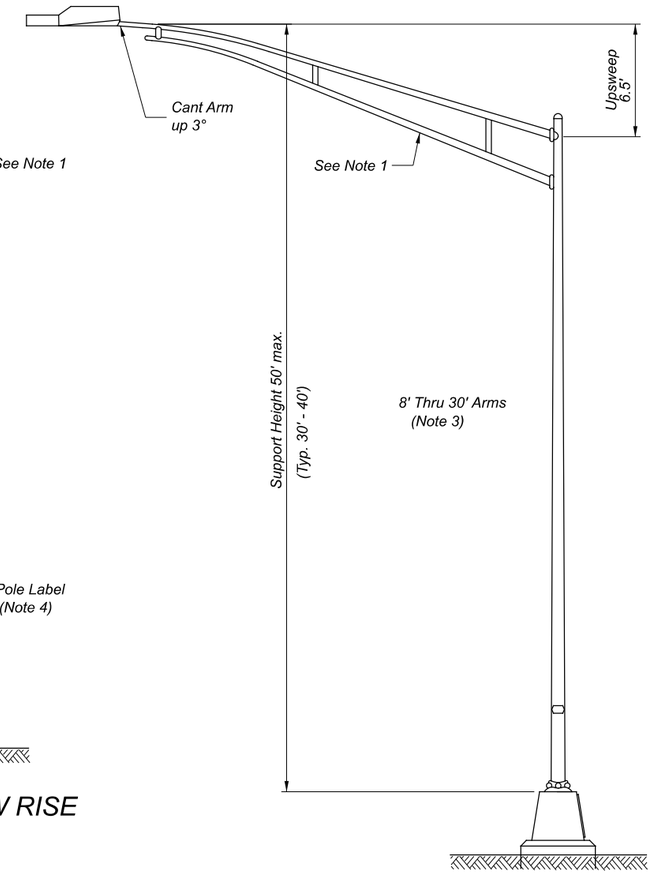

TRUSS ARM HIGH RISE

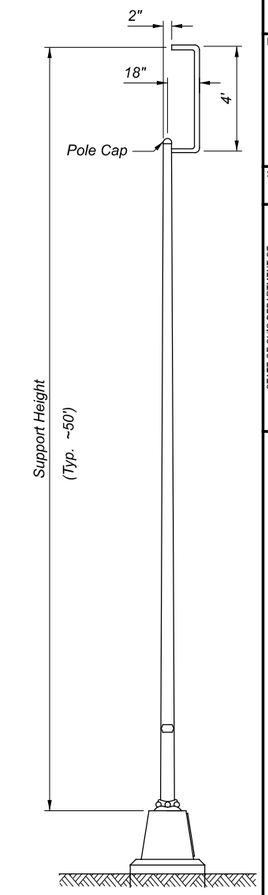

LOW MAST

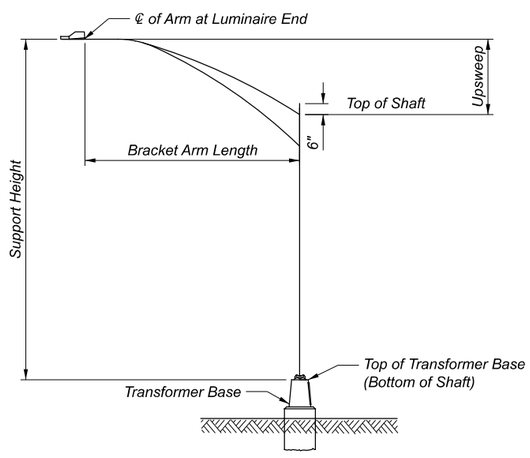

POLE COMPONENTS

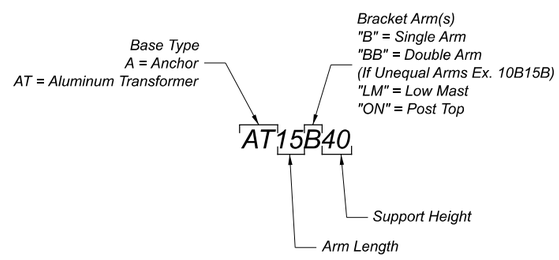

LIGHT POLE DESIGN NUMBER

LED
128

CONVENTIONAL
LED LUMINAIRE
WATT LABEL (REQ'D)

(Apply to Underside of Enclusure)

ACME MFG.
10-18
41 FT

POLE LABEL (Typ.)

NOTES:

1. Truss arms shown are schematic. Actual truss arm construction may vary slightly depending upon manufacturer (e.g., straight vs. curved lower-chords).
2. Do not provide nut covers for the pole base.
3. Do not exceed pole manufacturer's recommended height/arm length combination.
4. Affix stamped aluminum pole label to all poles. Include manufacturer, date of manufacture (MO-YR), and pole height.
5. All HL-10.11 poles are of round cross section with smooth walls (no flutes).

OFFICE OF ROADWAY ENGINEERING

REVISIONS
04-17-2020
07-19-2019
07-20-2018
01-19-2018
07-21-2017
01-20-2017
07-15-2016
01-15-2016

STDS ENGINEER
Duemmel

STATE OF OHIO DEPARTMENT OF TRANSPORTATION ADMINISTRATOR
David L. Holstein

LIGHT POLE STYLES

DESIGN AGENCY

SCD NUMBER
HL-10.11

SHEET 1 TOTAL 2

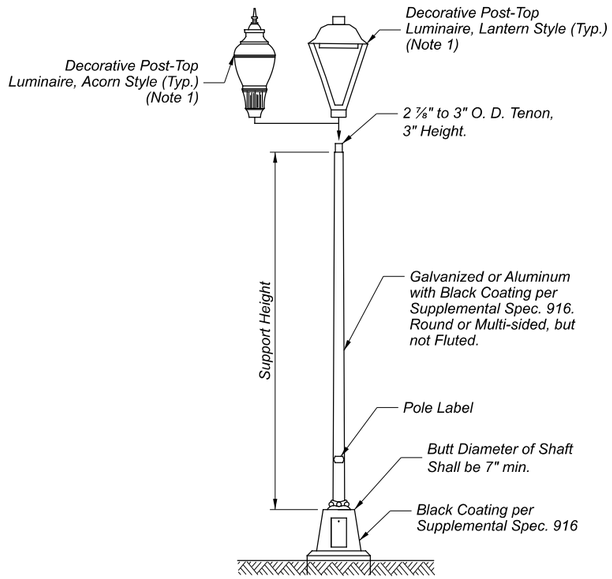

POST-TOP DECORATIVE LANTERN/ACORN

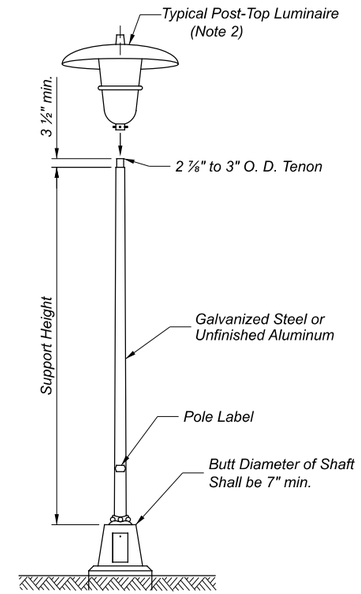

POST-TOP REST AREA

NOTES:

1. Luminaire is specified by Plan Note.
2. AEL Series 245L, Eaton MPH Woodbridge LED, or approved equal, grey finish.
3. Luminaire is specified by Plan Note.
4. Luminaire is specified by Plan Note.
5. All HL-10.11 poles are of round cross section with smooth walls (no flutes).

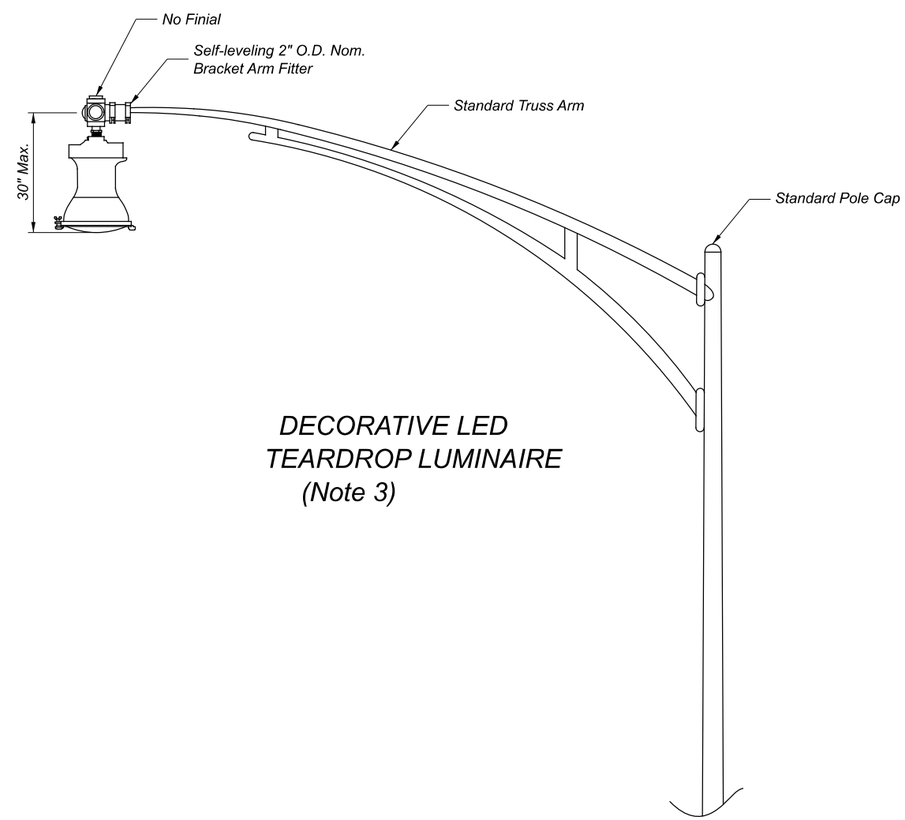

DECORATIVE LED TEARDROP LUMINAIRE (Note 3)

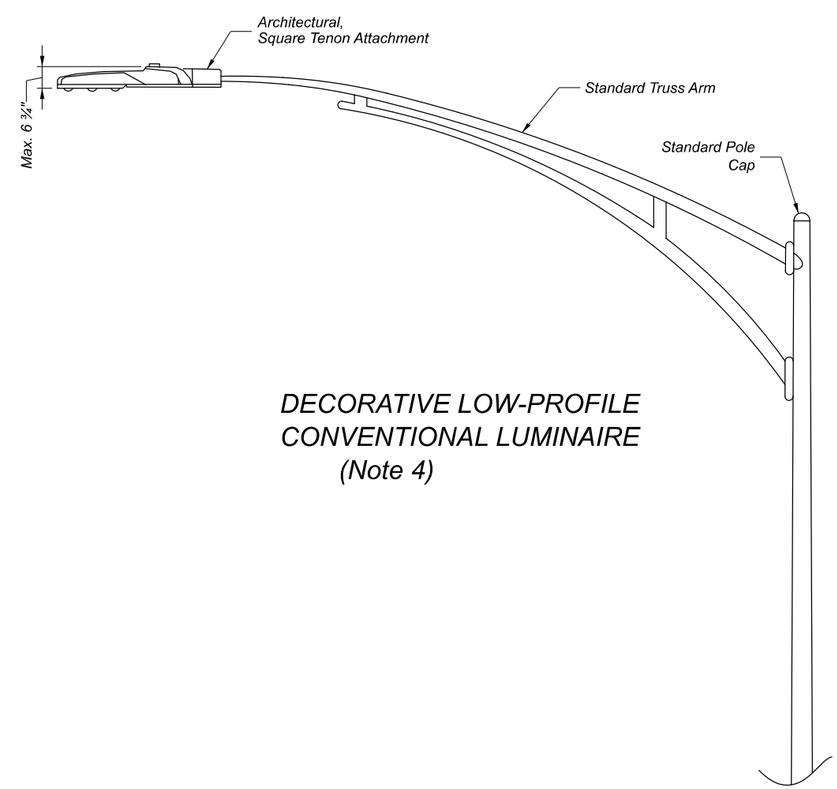

DECORATIVE LOW-PROFILE CONVENTIONAL LUMINAIRE (Note 4)

OFFICE OF ROADWAY ENGINEERING

REVISIONS
04-17-2020
07-19-2019
07-20-2018
01-19-2018
07-21-2017
01-20-2017
07-15-2016
01-15-2016

STDS ENGINEER
Duemmel

STATE OF OHIO DEPARTMENT OF TRANSPORTATION ADMINISTRATOR
David L. Holstein

LIGHT POLE STYLES

DESIGN AGENCY

SCD NUMBER
HL-10.11

SHEET 2 TOTAL 2