MAINTENANCE OF TRAFFIC SEQUENCE:

THESE PLANS ARE BASED ON THE FOLLOWING SUGGESTED SEQUENCE OF CONSTRUCTION.

PRE-PHASE 1
THIS PHASE SHALL CONSIST OF INSTALLING FILL MATERIAL UNDER THE BRIDGE CARRYING THE OHIO TURNPIKE OVER THE ABANDONED NS RAILROAD PER THE DETAILS IN THE PLANS.

THERE WILL BE NO DISRUPTION OF TRAFFIC IN THIS PHASE. CONTRACTOR ACCESS TO THE BRIDGE UNDERSIDE IS FROM STATE ROUTE 510.

PHASE 1

MP 98.9
THIS PHASE WILL CONSIST OF THE REMOVAL OF THE INSIDE PORTION OF THE EASTBOUND AND WESTBOUND BRIDGE DECK, MEDIAN WALL AND PORTIONS OF THE SUBSTRUCTURE AS INDICATED ON THE STAGED CONSTRUCTION PLANS OF THE STRUCTURE CARRYING THE OHIO TURNPIKE OVER THE ABANDONED NS RAILROAD AND THE RECONSTRUCTION TO GRADE OF THE SUBGRADE AND PAVEMENT.

MP 99.1
THIS PHASE WILL CONSIST OF REMOVING AND CONSTRUCTING THE INSIDE PORTION OF THE EASTBOUND AND WESTBOUND BRIDGE DECK, MEDIAN WALL, ETC. OF THE STRUCTURE CARRYING THE OHIO TURNPIKE OVER STATE ROUTE 510. SUBSTRUCTURE REPAIRS ARE ALSO INCLUDED IN THIS PHASE.

TWO WAY TRAFFIC ON STATE ROUTE 510 WILL BE MAINTAINED BY USE OF TEMPORARY TRAFFIC SIGNALS ONLY DURING THE INSTALLATION AND REMOVAL OF FALSEWORK AND DURING SUBSTRUCTURE AND SUPERSTRUCTURE REPAIRS .

TRAFFIC ON THE OHIO TURNPIKE SHALL BE MAINTAINED AS FOLLOWS, AND PER OTIC STANDARD CONSTRUCTION DRAWINGS TCR-2 AND TCR-12:

WESTBOUND
1. THE LEFT LANE SHALL BE CLOSED PER TCR-2. THE REQUIRED 840 FOOT LANE CLOSURE TAPER SHALL TERMINATE BEFORE THE ENTRANCE RAMP FROM THE LAKE ERIE ISLANDS TRAVEL PLAZA.
2. AT THE END OF THE TCR-2 LANE CLOSURE TAPER, PROVIDE AN MINIMUM OF 2,180 FOOT BUFFER ZONE BEFORE IMPLEMENTING THE TCR-12 DUAL LANE SHIFT.
3. SHIFT THE RIGHT AND CENTER LANES, AS SHOWN IN THE PLANS, PER TCR-12
4. INSTALL ITEM 614 - OBJECT MARKERS, 1-WAY ON GUARDRAIL POSTS 12' C/C FROM STA. 895+50 TO STA. 917+30 3

EASTBOUND
1. THE LEFT LANE SHALL BE CLOSED PER TCR-2.
2. AT THE END OF THE TCR-2 "LANE CLOSURE TAPER" PROVIDE A MINIMUM 1,320 FOOT BUFFER ZONE BEFORE IMPLEMENTING THE TCR-12 DUAL LANE SHIFT
3. SHIFT THE RIGHT AND CENTER LANES, AS SHOWN IN THE PLANS, PER TCR-12
4. INSTALL ITEM 614 - OBJECT MARKERS, 1-WAY ON GUARDRAIL POSTS 12' C/C FROM STA. 895+90 TO STA. 917+70 3

SLOPE REPAIR AT MO 99.9 (EASTBOUND) TO BE CONSTRUCTED IN THIS PHASE.

WINTER SHUTDOWN

PHASE 1 MAINTENANCE OF TRAFFIC SHALL REMAIN IN PLACE THROUGH THE WINTER SHUTDOWN PERIOD. THE OHIO TURNPIKE AND INFRASTRUCTURE COMMISSION SHALL MAINTAIN THE WORK ZONE THROUGH THE WINTER SHUTDOWN PERIOD 3

PHASE 2

MP 98.9
THIS PHASE WILL CONSIST OF THE REMOVAL OF THE OUTSIDE PORTION OF THE EASTBOUND AND WESTBOUND BRIDGE DECK, PARAPET WALL, AND PORTIONS OF THE SUBSTRUCTURE AS INDICATED ON THE PLANS FOR THE STRUCTURE CARRYING THE OHIO TURNPIKE OVER THE ABANDON NS RAILROAD AND THE RECONSTRUCTION TO GRADE OF THE SUBGRADE AND PAVEMENT.

MP 99.1
THIS PHASE WILL CONSIST OF REMOVING AND CONSTRUCTING THE OUTSIDE PORTION OF THE EASTBOUND AND WESTBOUND BRIDGE DECK AND PARAPET WALL FOR THE STRUCTURE CARRYING THE OHIO TURNPIKE OVER STATE ROUTE 510. SUBSTRUCTURE REPAIRS ARE ALSO INCLUDED IN THIS PHASE.

BOTH DIRECTIONS OF TRAFFIC ON STATE ROUTE 510 WILL BE MAINTAINED BY USE OF TEMPORARY TRAFFIC SIGNALS ONLY DURING THE INSTALLATION AND REMOVAL OF FALSEWORK AND DURING SUBSTRUCTURE AND SUPERSTRUCTURE REPAIRS .

TRAFFIC ON THE OHIO TURNPIKE SHALL BE MAINTAINED AS FOLLOWS, AND PER OTIC STANDARD CONSTRUCTION DRAWINGS TCR-2, TCR-9.1 AND TCR-12:

WESTBOUND
1. THE RIGHT LANE SHALL BE CLOSED PER TCR-2. THE REQUIRED 840 FOOT LANE CLOSURE TAPER SHALL TERMINATE BEFORE THE ENTRANCE RAMP FROM THE LAKE ERIE ISLANDS TRAVEL PLAZA.
2. INSTALL TRAFFIC CONTROL DEVICES ON THE ENTRANCE RAMP FROM THE LAKE ERIE ISLANDS TRAVEL PLAZA PER TCR-9.1
3. AT THE END OF THE TCR-2 LANE CLOSURE TAPER, PROVIDE AN MINIMUM OF 2,180 FOOT BUFFER ZONE BEFORE IMPLEMENTING THE TCR-12 DUAL LANE SHIFT.
4. SHIFT THE LEFT AND CENTER LANES, AS SHOWN IN THE PLANS, PER TCR-12

EASTBOUND
1. THE RIGHT LANE SHALL BE CLOSED PER TCR-2.
2. AT THE END OF THE TCR-2 LANE CLOSURE TAPER PROVIDE A MINIMUM 1,320 FOOT BUFFER ZONE BEFORE IMPLEMENTING THE TCR-12 DUAL LANE SHIFT
3. SHIFT THE LEFT AND CENTER LANES, AS SHOW IN THE PLANS, PER TCR-12

MAINTAINING TRAFFIC
GENERALLY, THE CONTRACTOR SHALL CONDUCT OPERATIONS AS TO COMPLETE THE PROPOSED IMPROVEMENT WITH A MINIMUM OF HAZARD, DELAY AND INCONVENIENCE TO THE MOTORISTS USING THE HIGHWAY AFFECTED BY THE WORK DONE UNDER THIS CONTRACT.

THE CONTRACTOR'S RESPONSIBILITY TO THE SAFETY OF THE MOTORING PUBLIC WHILE PERFORMING THE REQUIREMENTS OF THE CONTRACT SHALL BE IN ACCORDANCE WITH THESE TEMPORARY TRAFFIC CONTROL PLANS, THE SPECIFICATIONS AND SPECIAL PROVISIONS, THE CURRENT EDITION, LATEST REVISION OF THE "OHIO MANUAL OF UNIFORM TRAFFIC CONTROL DEVICES" (OMUTCD). IN ADDITION TO THE CONSTRUCTION AND MATERIAL SPECIFICATIONS, THE FOLLOWING SPECIFIC PROVISIONS ARE MANDATORY.

THE CONTRACTOR SHALL FURNISH, ERECT, MAINTAIN AND SUBSEQUENTLY REMOVE ALL TRAFFIC CONTROL DEVICES AS PER SP 614 MAINTAINING TRAFFIC, AND THE DETOUR PLANS INCLUDING BARRICADES AND SIGNS IN ACCORDANCE WITH THE OHIO TURNPIKE AND INFRASTRUCTURE COMMISSION (OTIC) STANDARD DRAWINGS AND OHIO DEPARTMENT OF TRANSPORTATION (ODOT) STANDARD CONSTRUCTION DRAWINGS AND THE OMUTCD. DETOUR SIGNS AND SUPPORTS SHALL BE ERECTED AND MAINTAINED BY THE CONTRACTOR.

I. NOTIFICATION

IN ADDITION TO THE NOTIFICATION REQUIREMENTS OF SP 614, THE CONTRACTOR SHALL INCLUDE THE FOLLOWING LOCAL AUTHORITIES.

STATE ROUTE 510
CLYDE POLICE DEPARTMENT
SANDUSKY COUNTY SHERIFF'S OFFOCE
TOWNSEND TOWNSHIP VOLUNTEER FIRE DEPARTMENT
ODOT DISTRICT 2
MARGARETTA LOCAL SCHOOL DISTRICT
TOWNSEND TOWNSHIP

II. WORK HOURS

ALL WORK SHALL BE PERFORMED IN ACCORDANCE WITH THE FOLLOWING SPECIAL PROVISION:

SP 106, HOURS OF WORK

III. LANE CLOSURE

ALL LANE CLOSURES SHALL BE IN ACCORDANCE WITH SP 614, THE OMUTCD AND APPLICABLE OTIC/ODOT STANDARD DRAWING(S).

OTIC TEMPORARY TRAFFIC CONTROL PHASE DATES, LANE REDUCTION TIME LIMITATIONS, AND LIQUIDATED DAMAGE CLAUSES ARE CONTAINED IN THE FOLLOWING SPECIAL PROVISIONS:

SP 103, CONSTRUCTION PHASING AND TIME OF COMPLETION
SP 104, ACCESS TO TURNPIKE AND RESTRICTIONS
SP 107, TIME OF ESSENCE - LIQUIDATED DAMAGES

IV. MAINTENANCE OF TRAFFIC SYSTEMS

A. WHEN REQUIRED

WHENEVER ANY PART OF THE TRAVELED SURFACE IS BEING WORKED UPON OR IS OTHERWISE NOT SUITABLE FOR SAFE AND CONVENIENT USE BY VEHICLES, TRAFFIC CONTROL DEVICES SUFFICIENT TO PROTECT SUCH AREAS TO ASSURE THE SAFE AND CONVENIENT PASSAGE OF VEHICULAR TRAFFIC SHALL BE INSTALLED AND MAINTAINED. SUCH TRAFFIC CONTROL DEVICES AND THE MANNER IN WHICH THEY ARE USED SHALL BE CONSISTENT WITH THESE PLANS, SP 614, THE OMUTCD OR AS SHOWN IN THE OTIC/ODOT STANDARD DRAWING(S). THE TRAFFIC CONTROL DEVICE SYSTEM SHALL CONSTITUTE THE MINIMUM PROVISIONS FOR TRAFFIC CONTROL FOR EACH PARTICULAR SITUATION. WHENEVER THE ENGINEER DEEMS IT NECESSARY ESPECIALLY WHERE A GRADE, CURVE, OR MERGE CONDITIONS EXISTS, HE/SHE MAY DIRECT THAT ADDITIONAL OR ALTERNATIVE DEVICES BE USED.

B. CONDITIONS

DURING ALL PARTS OF THIS PROJECT, FLAGGERS, SIGNING, BARRICADES, FLASHING ARROWS, ETC. SHALL BE LOCATED AS INDICATED IN THE OMUTCD OR AS SHOWN IN THE OTIC/ODOT STANDARD DRAWING(S). TWO-WAY TRAFFIC SHALL BE MAINTAINED AT ALL TIMES.

C. ADVANCE WARNING SIGNS

ALL ADVANCE WARNING SIGNS FOR ANY CONDITION WHICH RESTRICTS TRAFFIC SHALL BE ERECTED BEFORE ANY SUCH RESTRICTION IS PUT INTO EFFECT. ALL SUCH SIGNS SHALL BE COVERED OR REMOVED FROM THE VIEW OF TRAFFIC WHENEVER THEY ARE NOT APPLICABLE.

D. FLASHING ARROW REQUIREMENT

WHENEVER ANY PART OF THE TRAVELED SURFACE IS CLOSED, THE MOTORISTS SHALL BE WARNED AND DIRECTED BY THE CONTRACTOR THROUGH THE USE OF ONE FLASHING ARROW FOR EACH LANE CLOSED. ADDITIONALLY, THE PROVISIONS SET FORTH IN SP 614, THE OMUTCD AND THE APPLICABLE OTIC/ODOT STANDARD DRAWING(S) SHALL BE MET.

E. FLAGGERS

THE CONTRACTOR SHALL FURNISH ADDITIONAL FLAGGERS AS DIRECTED BY THE ENGINEER.

F. MAINTENANCE OF TRAFFIC CONTROL ZONES

THE CONTRACTOR SHALL BE RESPONSIBLE TO MAINTAIN THE SIGNS, DRUMS AND TEMPORARY PAVEMENT MARKINGS AT THE LOCATIONS DETAILED IN THE PLANS OR SPECIFIED IN THE OTIC/ODOT STANDARD DRAWINGS. THE CONTRACTOR SHALL IMMEDIATELY CORRECT ANY DEFICIENCY IN TRAFFIC ZONE ALIGNMENT, EQUIPMENT, NUMBER OF DEVICES OR PROCEDURE OF FLAG PERSONS WHICH IS BROUGHT TO HIS/HER ATTENTION BY THE ENGINEER.

G. FAILURE TO COMPLY

IF THERE IS ANY FAILURE TO COMPLY WITH PROVISIONS FOR TRAFFIC CONTROL SET OUT IN THESE PLANS AND NOTES, OR WITH THE PROVISIONS OF SP 614, THE OMUTCD, OR AS SHOWN IN THE OTIC/ODOT STANDARD DRAWING(S), THE HIGHWAY IN THE VICINITY OF THE WORK AREA SHALL NOT BE CONSIDERED IN A CONDITION FOR THE SAFE AND CONVENIENT USE BY THE TRAVELING PUBLIC. ANY FAILURE TO KEEP THE HIGHWAY, IN THE VICINITY OF THE WORK AREA, IN A CONDITION FOR THE SAFE AND CONVENIENT USE BY THE TRAVELING PUBLIC SHALL BE CONSIDERED A BREACH OF THIS CONTRACT. WORK SHALL BE SUSPENDED UNTIL THE CONTRACTOR COMPLIES WITH THE PROVISIONS OF THE AFOREMENTIONED ITEMS.

V. SAFETY

SAFETY AND CONTINUITY OF OPERATIONS OF TRAFFIC ON THE OHIO TURNPIKE SHALL BE OF THE UTMOST IMPORTANCE AND SHALL AT ALL TIMES BE PROTECTED AND SAFEGUARDED. THE CONTRACTOR SHALL DAILY, NOT LATER THAN 12 O'CLOCK PM (NOON), INFORM THE RESIDENT ENGINEER AS TO HIS PREPARATIONS AND METHOD OF WORK FOR THE FOLLOWING DAY WHENEVER SUCH WORK SHALL BE SUBMITTED TO THE CHIEF ENGINEER FOR HIS APPROVAL, WITHOUT WHICH IT SHALL NOT BE COMMENCED OR PROSECUTED.

VI. MAINTENANCE OF TRAFFIC MATERIALS

A. SIGNS

SIGN DIMENSIONS AND SPECIFICATIONS, INCLUDING LETTER SIZES SHALL BE AS PROVIDED IN THE OMUTCD, OR IN OTIC/ODOT STANDARD DRAWING(S). THE SIGNS SHALL BE SUBJECT TO APPROVAL OF THE ENGINEER PRIOR TO THE START OF THE PROJECT.

B. GUARDRAIL DELINEATION

GUARDRAIL DELINEATION SHALL CONSIST OF SP 626 BARRIER REFLECTORS INSTALLED IN ACCORDANCE WITH THE MANUFACTURER'S PRINTED INSTRUCTIONS. THE DELINEATORS SHALL BE SPACED 100' (MIN), WITH ALL GUARDRAIL RUNS HAVING NO LESS THAN TWO (2) DELINEATORS (ONE DELINEATOR ON THE BEGIN AND ONE ON THE END OF THE GUARDRAIL RUN)

PAYMENT FOR GUARDRAIL DELINEATION SHALL BE INCLUDED WITH ITEM SP 614 MAINTAINING TRAFFIC. SUCH PAYMENT SHALL INCLUDE PROVIDING, INSTALLING, MAINTAINING, REPLACING DAMAGED DELINEATORS AND REMOVING, AS SPECIFIED, FOR THE ABOVE SAID GUARDRAIL DELINEATION.

C. PORTABLE BARRIER

ALL PORTABLE BARRIERS SHOWN ON THE PLANS FOR MAINLINE TEMPORARY TRAFFIC CONTROL WILL BE AS PER SP 622. THE SAME BARRIER CAN BE USED FOR THE VARIOUS PHASES. THE COST FOR TRANSPORTING, INSTALLING, MAINTAINING, REMOVAL AND STORING THE PORTABLE BARRIER FOR EACH PHASE SHALL BE INCLUDED IN THE ORIGINAL UNIT COST OF SUPPLYING THE BARRIER FOR ITEM SP 622.

THE CONTRACTOR SHALL REPLACE ANY DAMAGED PORTABLE BARRIER WITHIN 24 HOURS OF A DAMAGING IMPACT.

VII. PAYMENT

ALL WORK AND TRAFFIC CONTROL DEVICES SHALL BE IN ACCORDANCE WITH SP 614, AS SHOWN IN THE OTIC/ODOT STANDARD DRAWING(S), ODOT CONSTRUCTION & MATERIAL SPECIFICATION (C&MS) AND OTHER APPLICABLE PORTIONS OF THE SPECIFICATIONS, AS WELL AS THE OMUTCD. PAYMENT FOR MAINTENANCE OF TRAFFIC ITEMS, UNLESS OTHERWISE SPECIFIED SEPARATELY, SHALL BE PAID FOR UNDER THE LUMP SUM BID FOR ITEM SP 614 – MAINTAINING TRAFFIC, WHICH SHALL INCLUDE ALL LABOR, EQUIPMENT MATERIALS AND INCIDENTALS REQUIRED TO COMPLETE THE WORK AS DETAILED IN THE PLAN.

PERMANENT PAVEMENT MARKINGS
AFTER PLACING THE SURFACE COURSE, THE CONTRACTOR MAY PLACE PERMANENT PAVEMENT MARKINGS INSTEAD OF PLACING WORK ZONE PAVEMENT MARKINGS, WHICH SHALL BE NON-PERFORMED AT THESE LOCATIONS.

PERMANENT PAVEMENT MARKINGS SHALL BE IN PLACE AS INDICATED IN THE PLANS PRIOR TO OPENING THE ROADWAY TO TRAFFIC.

CONTINUOUS ACCESS
THE CONTRACTOR SHALL MAINTAIN SAFE AND ADEQUATE DRIVEWAYS AND WALKWAYS IN ORDER TO PROVIDE CONTINUOUS ACCESS FOR PASSENGER VEHICLES, TRUCKS, AND SAFETY EQUIPMENT TO ALL ADJOINING PROPERTIES.

THE COST FOR ALL MATERIALS, EQUIPMENT, AND LABOR NECESSARY TO PROVIDE CONTINUOUS ACCESS SHALL BE INCLUDED IN THE LUMP SUM PRICE TOR SP 614 MAINTAINING TRAFFIC.

COVERING OF GROUND-MOUNTED SIGNS- GENERAL
WHEN REQUIRED BY OTHER ITEMS OR INCIDENTALLY TO SP 614 MAINTAINING TRAFFIC, COVER EXISTING GROUND-MOUNTED SIGNS WITH PLYWOOD OR OSB BLANKS (1/2" MINIMUM THICKNESS) COVERING 80% OF THE SIGN AREA AND ALL OF THE SIGN LEGEND. THE USE OF LOW QUALITY MATERIALS SUCH AS DUCT TAPE AND BLACK PLASTIC IS NOT PERMITTED.

ITEM 630 - SIGNING MISC.: LOW CLEARANCE SIGNS

IF DURING THE PROJECT THE CONTRACTOR REDUCES THE VERTICAL CLEARANCE TO LESS THAN 14'-6" THEN THE CONTRACTOR MUST INSTALL W12-2 LOW CLEARANCE SIGNS PRIOR TO IMPLEMENTING THE REDUCTION IN VERTICAL CLEARANCE. THE SIGN LEGEND ON THE W12-2 SHALL BE THE MEASURED REDUCED VERTICAL CLEARANCE MINUS 3 INCHES.

WHERE VERTICAL CLEARANCE IS REDUCED ALONG THE MAINLINE OF THE TURNPIKE OR A ROAD THAT CROSSES UNDER THE TURNPIKE, SIGN(S) MUST BE POSTED APPROXIMATELY ¼ MILE, ½ MILE AND 1 MILE PRIOR TO THE BRIDGE WITH THE VERTICAL CLEARANCE REDUCTION. APPROACHES WITH A SINGLE LANE REQUIRES A SIGNS ON THE RIGHT-HAND SIDE ONLY. APPROACHES WITH TWO OR MORE LANES REQUIRES SIGNS ON THE LEFT-HAND SIDE AND SIGNS ON THE RIGHT-HAND SIDE.

ON ROADS THAT CROSS UNDER THE TURNPIKE, ADDITIONAL SIGNS MAY BE NEEDED IF A SIDE STREET IS LOCATED BETWEEN THE ¼ MILE SIGN AND THE BRIDGE WITH THE VERTICAL CLEARANCE REDUCTION.

ANY TEMPORARY TRAFFIC ZONES APPROACHING THE BRIDGE MUST BE FULLY ESTABLISHED PRIOR TO THE FIRST LOW CLEARANCE SIGN (APPROXIMATELY 1 MILE PRIOR TO THE BRIDGE WITH THE VERTICAL CLEARANCE REDUCTION.)

PAYMENT FOR THIS ITEM SHALL INCLUDE, BUT NOT BE LIMITED TO, THE COST TO FURNISH AND ERECT THE SIGNS, INCLUDING SIGN SUPPORT, MAINTAINING THE SIGN AND REMOVAL OF THE SIGN. THE FOLLOWING ESTIMATED QUANTITY HAS BEEN CARRIED TO THE

GENERAL SUMMARY FOR USE AS DIRECTED BY THE ENGINEER:

ITEM 630 - SIGNING MISC.: LOW CLEARANCE SIGN.....7 EACH

ITEM 630 - SIGNING MISC.: ADDITIONAL SIGNS. GROUND MOUNTED. AS DIRECTED BY THE ENGINEER

WHEN ADDITIONAL SIGNING IS NEEDED TO MAINTAIN TRAFFIC, THE CONTRACTOR SHALL FURNISH THE SIGN OR SIGNS AS DIRECTED BY THE ENGINEER. THESE SIGNS SHALL BE GROUND MOUNTED AND MEET ALL THE SPECIFICATIONS OF THE PLAN, PROPOSAL AND CURRENT YEAR CMS.

PAYMENT FOR THIS ITEM SHALL INCLUDE, BUT NOT BE LIMITED TO, THE COST TO FURNISH AND ERECT THE SIGN, INCLUDING DRIVING POSTS OR OTHER APPROVED METHODS OF SIGN SUPPORT, MAINTAINING THE SIGN AND REMOVAL OF THE SIGN. THE FOLLOWING ESTIMATED QUANTITY HAS BEEN CARRIED TO THE GENERAL SUMMARY FOR USE AS DIRECTED BY THE ENGINEER:

ITEM 630, SIGNING MISC.: ADDITIONAL SIGNS, GROUND MOUNTED, AS DIRECTED BY THE ENGINEER..... 16 SQ FT

ITEM 614 - REPLACEMENT SIGN

FLAT SHEET SIGNS FURNISHED BY THE CONTRACTOR IN ACCORDANCE WITH THE REQUIREMENTS OF THE PLANS, SPECIFICATIONS AND PROPOSAL WHICH BECOME DAMAGED BY TRAFFIC FOR REASONS BEYOND THE CONTROL OF THE CONTRACTOR SHALL BE REPLACED IN KIND WHEN ORDERED BY THE CHIEF ENGINEER. REPLACEMENT SIGNS SHALL BE NEW. OTHER MATERIALS MAY BE IN USED, BUT GOOD, CONDITION SUBJECT TO APPROVAL BY THE CHIEF ENGINEER.

PAYMENT FOR THE NEW SIGNS SHALL BE MADE AT THE CONTRACT PRICE PER EACH FOR ITEM 614, REPLACEMENT SIGN, AND SHALL INCLUDE THE COST OF REMOVING AND DISPOSING OF DAMAGED SIGNS, HARDWARE AND SUPPORTS, AND PROVIDING THE NECESSARY REPLACEMENT HARDWARE, SUPPORTS, ETC. THE FOLLOWING ESTIMATED QUANTITY HAS BEEN CARRIED TO THE GENERAL SUMMARY FOR USE AS DIRECTED BY THE ENGINEER:

ITEM 614, REPLACEMENT SIGN..... 5 EACH

CONSTRUCTION TRAFFIC

ALL CONSTRUCTION TRAFFIC SHALL USE ACCEPTABLE TRUCK ROUTES TO ACCESS THE CONSTRUCTION AREA. USE OF LOCAL RESIDENTIAL STREETS IS STRICTLY PROHIBITED UNLESS ALLOWED IN WRITING BY THE LOCAL ENFORCEMENT AUTHORITY.

SUSPENSION OF WORK

IF THE CONTRACTOR FAILS TO COMPLY WITH THE PROVISIONS FOR TRAFFIC CONTROL AS SET FORTH IN THESE PLANS OR WITH PROVISIONS OF THE OHIO MANUAL OF UNIFORM TRAFFIC CONTROL DEVICES, THE CHIEF ENGINEER WILL SUSPEND WORK UNTIL THE CONTRACTOR COMPLIES WITH THE NECESSARY REQUIREMENTS.

SURFACE CONDITION SIGNS

ERECT A GROOVED PAVEMENT SIGN (W8-H15) 250 FEET (75 M) IN ADVANCE OF ANY SECTION OF ROADWAY WHERE TRAFFIC MUST TRAVEL ON A PLANED SURFACE. ENSURE THESE SIGNS ARE IN PLACE BEFORE OPENING THE ROADWAY TO TRAFFIC. ERECT THESE SIGNS ON EACH ENTRANCE RAMP AND AT INTERSECTIONS OF THROUGH ROUTES TO WARN TRAFFIC OF THIS SURFACE CONDITION. PAYMENT SHALL BE MADE UNDER THE LUMP SUM FOR SP 614 MAINTAINING TRAFFIC.

ITEM 614 - WORK ZONE IMPACT ATTENUATOR FOR 24" WIDE HAZARDS (UNIDIRECTIONAL OR BIDIRECTIONAL)

THIS ITEM SHALL CONSIST OF FURNISHING AND INSTALLING A NON-GATING IMPACT ATTENUATOR. FURNISH AN IMPACT ATTENUATOR FROM THE OFFICE OF ROADWAY ENGINEERING APPROVED LIST FOR WORK ZONE IMPACT ATTENUATORS, FROM THE ROADWAY STANDARDS APPROVED PRODUCTS WEB PAGE.

INSTALLATION SHALL BE AT THE LOCATIONS SPECIFIED IN THE PLANS IN ACCORDANCE WITH THE MANUFACTURER'S SPECIFICATIONS.

THE CONTRACTOR SHALL REPAIR OR REPLACE A DAMAGED UNIT WITHIN 24 HOURS OF A DAMAGING IMPACT.

WHEN BIDIRECTIONAL DESIGNS ARE SPECIFIED, THE CONTRACTOR SHALL SUPPLY APPROPRIATE TRANSITIONS.

WHEN GATING IMPACT ATTENUATORS ARE DESIRED, THE CONTRACTOR SHALL SUBMIT DOCUMENTATION TO THE ENGINEER FOR ACCEPTANCE.

THE COST FOR THE ADDITIONAL BARRIER REQUIRED FOR A GATING IMPACT ATTENUATOR SHALL BE INCLUDED IN THE COST OF THE GATING IMPACT ATTENUATOR.

PAYMENT FOR THE ABOVE WORK SHALL BE MADE AT THE UNIT PRICE BID AND SHALL INCLUDE ALL LABOR, TOOLS, EQUIPMENT AND MATERIALS NECESSARY TO CONSTRUCT AND MAINTAIN A COMPLETE AND FUNCTIONAL IMPACT ATTENUATOR SYSTEM, INCLUDING ALL RELATED BACKUPS, TRANSITIONS, LEVELING PADS, HARDWARE AND GRADING, NOT SEPARATELY SPECIFIED, AS REQUIRED BY THE MANUFACTURER.

ITEM SPECIAL - "SNAP" MILL AND FILL

MAINTENANCE OF TRAFFIC ON THE MEDIAN SHOULDER AND PORTIONS OF THE OUTSIDE SHOULDER WILL REQUIRE THE EXISTING "SNAPS" TO BE MILLED AND FILLED OUTSIDE THE WORK LIMITS FOR TEMPORARY TRAFFIC CONTROL PURPOSES.

PAYMENT FOR THIS ITEM SHALL INCLUDE REMOVAL OF EXISTING "SNAPS" AND THE EXISTING PAVEMENT JOINT BY MILLING 1 1/2" DEEP AND 5' WIDE, COATING All EXPOSED MILLED SURFACES WITH ITEM 407 NON-TRACKING TACK COAT, AND PAVING THE MILLED AREA WITH 1 1/2" OF ITEM SP 404 - ASPHALT CONCRETE SURFACE COURSE, PG 64-22. ALL LABOR, EQUIPMENT AND MATERIALS NECESSARY TO COMPLETE THE ABOVE MENTIONED WORK SHALL BE INCLUDED IN THE UNIT PRICE BID FOR ITEM SPECIAL - "SNAP" MILL AND FILL.

ITEM SPECIAL - "SNAP" MILL AND FILL.....15,000 FT

WORK ZONE PAVEMENT MARKINGS

THE WORK ZONE PAVEMENT MARKINGS SHALL BE 4" WIDE, UNLESS NOTED OTHERWISE ON THE PLANS OR ODOT/OTIC STANDARD DRAWING(S). REMOVAL METHODS LISTED IN SP 614C SHALL ALSO BE USED TO REMOVE ITEM 614 - WORK ZONE PAVEMENT MARKINGS.

ALL COSTS FOR THE PLACEMENT OF WORK ZONE MARKINGS INCLUDING EQUIPMENT, LABOR, AND MATERIALS SHALL BE INCLUDED IN THE LUMP SUM BID FOR ITEM 614 - MAINTAINING TRAFFIC.

SP 614C - REMOVAL OF PAVEMENT MARKINGS

ALL PAVEMENT MARKINGS WHICH ARE IN CONFLICT WITH THE PROPOSED MAINTENANCE OF TRAFFIC PAVEMENT MARKINGS ARE TO BE REMOVED AS PER SP 614C - REMOVAL OF PAVEMENT MARKINGS.

REMOVAL OF EXISTING CONFLICTING PAVEMENT MARKINGS SHALL BE ACCOMPLISHED BY EITHER GRINDING OR WATER BLAST AS APPROVED BY THE CHIEF ENGINEER, IN ACCORDANCE WITH SP 614C.

BLACKOUT TAPE CAN BE USED PER SP 614A AND CMS 614.

MEASUREMENT OF THIS ITEM SHALL BE IN ACCORDANCE WITH SP 614C AND SHALL INCLUDE ALL LABOR, MATERIALS, EQUIPMENT AND INCIDENTALS NECESSARY TO REMOVE CONFLICTING PAVEMENT MARKINGS TO THE SATISFACTION OF THE CHIEF ENGINEER.

THE FOLLOWING QUANTITY HAS BEEN CARRIED TO THE MAINTENANCE OF TRAFFIC GENERAL SUMMARY TO BE UTILIZED AS DIRECTED BY THE CHIEF ENGINEER.

SP 614C - REMOVAL OF PAVEMENT MARKING ..... 7.0 MILE

SP 621 RAISED PAVEMENT MARKERS, AS PER PLAN #1

ALL RAISED PAVEMENT MARKER REFLECTORS WHICH ARE IN CONFLICT WITH THE PROPOSED MAINTENANCE OF TRAFFIC PAVEMENT MARKINGS ARE TO BE REMOVED AND REPLACED. THE FOLLOWING ESTIMATED QUANTITIES HAVE BEEN INCLUDED IN THE GENERAL SUMMARY FOR USE AS DIRECTED BY THE CHIEF ENGINEER FOR CONTINGENCY PURPOSES ONLY.

SP 621 REPLACEMENT PRISMATIC RETRO-REFLECTOR .....212 EACH

SP 621 RAISED PAVEMENT MARKERS, AS PER PLAN #2 3

INSTALL AND REMOVE RAISED PAVEMENT MARKER REFLECTORS IN THE PHASE 1 LANE SHIFT AREAS EASTBOUND AND WESTBOUND. THE RAISED PAVEMENT MARKERS SHALL BE LOCATED 1" LEFT OF THE CHANNELIZING LANE LINE, SPACED EVERY 20', OF BOTH THE IN AND OUT LANE SHIFT AREA, IN LIEU OF THE CONSTRUCTION ZONE MARKERS SPECIFIED IN TCR-12. THIS ITEM INCLUDES PATCHING OF THE ASPHALT ROADWAY AFTER REMOVAL OF THE RAISED PAVEMENT MARKERS. THE FOLLOWING ESTIMATED QUANTITIES HAVE BEEN INCLUDED IN THE GENERAL SUMMARY.

SP 621 REPLACEMENT PRISMATIC RETRO-REFLECTOR .....248 EACH

ITEM 642 –PAVEMENT MARKING MISC: FINAL PAVEMENT MARKING PREPARATION

THIS ITEM SHALL CONSIST OF APPLYING A BASE LAYER OF PAVEMENT MARKING PRIOR TO THE PLACEMENT OF FINAL MARKINGS.

IF FINAL PAVEMENT MARKING WILL BE PLACED WHERE 614.11 OR SP 614 B PAVEMENT MARKINGS WERE REMOVED BY EITHER SP 614C GRINDING METHOD OR WATER-BLAST METHOD, THEN THE ASPHALT PAVEMENT MUST FIRST BE PREPPED BY APPLYING A BLACK SHADOW MARKING. THE BLACK SHADOW MARKING SHALL CREATE A 1-INCH BORDER AROUND THE FINAL MARKING BEING PLACED.

THE BLACK SHADOW MARKING SHALL BE NON-REFLECTIVE AND PLACED AT THE SAME RATE AS ITEM 642 TYPE 1 MARKINGS.

THE FOLLOWING ESTIMATED QUANTITIES HAVE BEEN CARRIED TO THE GENERAL SUMMARY FOR USE AT LOCATIONS IDENTIFIED BY THE ENGINEER PRIOR TO THE PLACEMENT OF WORK ZONE PAVEMENT MARKINGS.

ITEM 642-PAVEMENT MARKING MISC.: FINAL PAVEMENT MARKING PREPARATION.....7.0 MILE

ITEM 614 PORTABLE CHANGEABLE MESSAGE SIGN, AS PER PLAN

THE CONTRACTOR SHALL FURNISH, INSTALL, MAINTAIN AND REMOVE, WHEN NO LONGER NEEDED, TWO (2) PORTABLE CHANGEABLE MESSAGE SIGNS (PCMS). THE TWO (2) SIGNS SHALL BE LOCATED NEAR THE PROJECT SITE, ONE FOR EACH DIRECTION OF TRAVEL, FOR THE DURATION OF THE PROJECT. THE INTENT OF THE PCMS IS TO ALERT MOTORISTS OF TRAFFIC QUEUES OR INCIDENTS DURING MAINTENANCE OF TRAFFIC PHASES 1 AND 2. PCMS SHOULD BE PUT IN PLACE APPROXIMATELY A WEEK BEFORE PHASE 1 IS ESTABLISHED AND REMOVED ONCE PHASE 2 IS DISCONTINUED. THE SIGNS SHALL BE OF A TYPE SHOWN ON A LIST OF APPROVED CLASS "A" PCMS UNITS MAINTAINED BY THE ODOT DIRECTOR (OFFICE OF MATERIALS MANAGEMENT). THE APPROVED LIST OF PORTABLE CHANGEABLE MESSAGE SIGNS CAN BE FOUND ON THE ODOT WEBSITE BY CLICKING ON THE SERVICES MENU, THEN CLICKING ON MATERIALS MANAGEMENT.

EACH SIGN SHALL BE TRAILER-MOUNTED AND EQUIPPED WITH A FUNCTIONAL DIMMING MECHANISM, TO DIM THE SIGN DURING DARKNESS, AND A TAMPER AND VANDAL PROOF ENCLOSURE. EACH SIGN SHALL BE PROVIDED WITH APPROPRIATE TRAINING AND OPERATION INSTRUCTIONS TO ENABLE ON-SITE PERSONNEL TO OPERATE AND TROUBLESHOOT THE UNIT. THE SIGN SHALL ALSO BE CAPABLE OF BEING POWERED BY AN ELECTRICAL SERVICE DROP FROM A LOCAL UTILITY COMPANY. PCMS SHALL BE DELINEATED ON A PERMANENT BASIS IN ACCORDANCE WITH ODOT CMS 614.03.

THE PCMS LOCATIONS, LIMITS FOR THOSE LOCATIONS AND ALL ACTIVATION OF PCMS BY THE CONTRACTOR SHALL BE AS DIRECTED BY THE CHIEF ENGINEER. THE PCMS SHALL BE LOCATED IN A HIGHLY VISIBLE POSITION YET PROTECTED FROM TRAFFIC. THE CONTRACTOR SHALL, AT THE DIRECTION OF THE CHIEF ENGINEER, RELOCATE THE PCMS TO IMPROVE VISIBILITY OR ACCOMMODATE CHANGED CONDITIONS. WHEN NOT IN USE, THE PCMS SHALL BE TURNED OFF. ADDITIONALLY, WHEN NOT IN USE FOR EXTENDED PERIODS OF TIME, THE PCMS SHALL BE TURNED, FACING AWAY FROM ALL TRAFFIC, AND SHALL DISPLAY ONE OR MORE TYPE G YELLOW RETROREFLECTIVE SHEETING SURFACES OF 9-INCH BY 15-INCH MINIMUM SIZE FACING TRAFFIC.

THE CHIEF ENGINEER SHALL BE PROVIDED ACCESS TO EACH SIGN UNIT AND SHALL BE PROVIDED WITH APPROPRIATE TRAINING AND OPERATION INSTRUCTIONS TO ENABLE TURNPIKE MAINTENANCE PERSONNEL TO OPERATE AND TROUBLESHOOT THE UNIT, AND TO REVISE SIGN MESSAGES, IF NECESSARY.

ALL MESSAGES TO BE DISPLAYED ON THE SIGN WILL BE PROVIDED BY THE CHIEF ENGINEER. A LIST OF ALL REQUIRED PRE-PROGRAMMED MESSAGES WILL BE GIVEN TO THE CONTRACTOR AT THE PROJECT PRE-CONSTRUCTION CONFERENCE. THE SIGN SHALL HAVE THE CAPABILITY TO STORE UP TO 99 MESSAGES. MESSAGE MEMORY OR PRE-PROGRAMMED DISPLAYS SHALL NOT BE LOST AS A RESULT OF POWER FAILURES TO THE ON-BOARD COMPUTER. THE SIGN LEGEND SHALL BE CAPABLE OF BEING CHANGED IN THE FIELD. THREE-LINE PRESENTATION FORMATS WITH UP TO SIX MESSAGE PHASES SHALL BE SUPPORTED. PCMS FORMAT SHALL PERMIT THE COMPLETE MESSAGE FOR EACH PHASE TO BE READ AT LEAST TWICE.

THE PCMS SHALL CONTAIN AN ACCURATE CLOCK AND PROGRAMMING LOGIC WHICH WILL ALLOW THE SIGN TO BE ACTIVATED, DEACTIVATED OR MESSAGES CHANGED AUTOMATICALLY AT DIFFERENT TIMES OF THE DAY FOR DIFFERENT DAYS OF THE WEEK.

THE PCMS SHALL CONTAIN A CELLULAR TELEPHONE DATA LINK WHICH WILL ALLOW REMOTE ACCESS BY THE OTIC COMMUNICATIONS CENTER THROUGH A WEB BROWSER OR PROVIDED SOFTWARE. REMOTE ACCESS WILL ALLOW PCMS ACTIVATION, MESSAGE CHANGES, MESSAGE ADDITIONS, REVISIONS TO TIME OF DAY PROGRAMS, VERIFICATION OF CURRENT AND PROGRAMMED MESSAGES AND SHOW ITS CURRENT LOCATION ON A MAP. THE OTIC COMMUNICATIONS CENTER SHALL BE FURNISHED A USERNAME AND PASSWORD TO ACCESS THE PCMS THROUGH THE WEBSITE OR PROVIDED SOFTWARE.

ALL PCMS UNITS SHALL BE EQUIPPED WITH RADAR THAT ENABLES THE MESSAGE BOARD TO DISPLAY THE SPEED OF THE APPROACHING VEHICLES.

WHEN A PCMS IS INITIALLY BROUGHT OUT TO THE PROJECT THE CONTRACTOR SHALL CONTACT THE OTIC COMMUNICATIONS CENTER WITH THE PCMS NUMBER AND LOCATION. AT THAT TIME THE OTIC COMMUNICATIONS WILL VERIFY COMMUNICATION WITH THE PCMS.

WHEN A PCMS IS REPLACED OR RELOCATED THE CONTRACTOR SHALL CONTACT THE OTIC COMMUNICATIONS CENTER WITH THE PCMS NUMBER AND LOCATION.

THE PCMS UNIT SHALL BE MAINTAINED IN GOOD WORKING ORDER BY THE CONTRACTOR IN ACCORDANCE WITH THE PROVISIONS OF ODOT CMS 614.07. THE CONTRACTOR SHALL, PRIOR TO ACTIVATING THE UNIT, MAKE ARRANGEMENTS WITH AN AUTHORIZED SERVICE AGENT FOR THE PCMS, TO ASSURE PROMPT SERVICE IN THE EVENT OF FAILURE. ANY FAILURE SHALL NOT RESULT IN THE SIGN BEING OUT OF SERVICE FOR MORE THAN 12 HOURS, INCLUDING WEEKENDS. FAILURE TO COMPLY MAY RESULT IN AN ORDER TO STOP WORK AND OPEN ALL TRAFFIC LANES AND/OR IN THE CHIEF ENGINEER TAKING APPROPRIATE ACTION TO SAFELY CONTROL TRAFFIC. THE ENTIRE COST TO CONTROL TRAFFIC, ACCRUED BY THE OHIO TURNPIKE AND INFRASTRUCTURE COMMISSION DUE TO THE CONTRACTOR'S NONCOMPLIANCE, WILL BE DEDUCTED FROM MONEYS DUE, OR TO BECOME DUE THE CONTRACTOR ON THEIR CONTRACT.

THE CONTRACTOR SHALL BE RESPONSIBLE FOR 24-HOUR-PER-DAY OPERATION AND MAINTENANCE OF THESE SIGNS ON THE PROJECT FOR THE DURATION OF THE PHASES WHEN THE PLAN REQUIRES THEIR USE.

PAYMENT FOR THE ABOVE DESCRIBED ITEM SHALL BE AT THE CONTRACT UNIT PRICE. PAYMENT SHALL INCLUDE ALL LABOR, MATERIALS, EQUIPMENT, FUELS, LUBRICATING OILS, SOFTWARE, HARDWARE AND INCIDENTALS TO PERFORM THE ABOVE DESCRIBED WORK. THE CONTRACTOR SHALL ONLY BE PAID FOR PCMS UNITS WHEN THEY ARE IN OPERATION ON THE PROJECT AS SPECIFIED IN THE PLANS OR BY THE CHIEF ENGINEER.

THE FOLLOWING ESTIMATED QUANTITY HAS BEEN INCLUDED IN THE GENERAL SUMMARY FOR USE AS DIRECTED BY THE CHIEF ENGINEER TO PROVIDE TWO (2) PORTABLE CHANGEABLE MESSAGE SIGNS, EACH SIGN FOR APPROXIMATELY 578 DAYS, FOR AN ESTIMATED TOTAL OF 1,156 DAYS.

ITEM 614, PORTABLE CHANGEABLE MESSAGE SIGN, AS PER PLAN.....1,156 DAYS

ITEM SP 614 - ZONE PERSON

THE ZONE PERSON REQUIREMENTS OF SP 614 - MAINTAINING TRAFFIC ARE MODIFIED AS FOLLOWS:

THE CONTRACTOR SHALL DESIGNATE A ZONE PERSON, (SUBJECT TO THE APPROVAL OF THE CHIEF ENGINEER), OTHER THAN THE SUPERINTENDENT, TO BE RESPONSIBLE FOR THE MAINTENANCE OF TRAFFIC. THE DESIGNATED ZONE PERSON SHALL HAVE A FULL WORKING KNOWLEDGE OF THE MAINTENANCE OF TRAFFIC PLANS AND SPECIAL PROVISIONS. THE ZONE PERSON SHALL SUPERVISE THE SET -UP AND REMOVAL OF THE TRAFFIC CONTROL DEVICES AS WELL AS THE MAINTENANCE, ON A CONTINUAL BASIS TWENTY-FOUR (24) HOURS PER DAY, SEVEN (7) DAYS PER WEEK, WHILE ZONES ARE IN PLACE, EXCLUDING THE WINTER SHUTDOWN PERIOD (11/5/2022 THROUGH 4/2/2023). THE ZONE PERSON SHALL BE RESPONSIBLE THAT ANY DAMAGED OR MISSING TRAFFIC CONTROL DEVICES ARE REPAIRED OR REPLACED IMMEDIATELY. IN ADDITION, THE ZONE PERSON SHALL CONTINUALLY CHECK THE REFLECTIVE SURFACES OF ALL THE TRAFFIC CONTROL DEVICES TO ENSURE THAT THE DEVICES ARE CLEAN AND ARE PERFORMING THEIR INTENDED FUNCTION. THE ZONE PERSON SHALL HAVE NO OTHER CONSTRUCTION RELATED DUTIES. 3

THE ZONE PERSON SHALL SUBMIT DOCUMENTATION VERIFYING THE STATUS OF TRAFFIC CONTROL AT THE END OF EACH SHIFT TO THE CHIEF ENGINEER.

THE FOLLOWING QUANTITY HAS BEEN CARRIED TO THE GENERAL SUMMARY: 3

ITEM SP 614 - ZONE PERSON .....10,272 HOURS

SPEED REDUCTION FOR BRIDGE DECK POURS

THE CONTRACTOR SHALL FURNISH, INSTALL, MAINTAIN, COVER DURING SUSPENSION OF WORK, AND SUBSEQUENTLY REMOVE SPEED LIMIT 35 MPH (R2-1) SIGNS AND REDUCED SPEED LIMIT AHEAD 35 MPH (W3-5) SIGNS IN ADVANCE OF THE SCHEDULED BRIDGE DECK POUR. THE SIGNS SHALL BE ERECTED ON THE LEFT-HAND AND RIGHT-HAND SIDE OF THE MAINLINE FACING TRAFFIC. THEY SHALL BE PLACED SO AS NOT TO INTERFERE WITH THE VISIBILITY OF ANY OTHER TRAFFIC CONTROL SIGNS.

EACH AFFECTED LANE SHALL HAVE ONE SET OF DUAL SPEED LIMIT 35 MPH (R2-1) SIGNS PLACED APPROXIMATELY 500 FEET IN ADVANCE OF THE SUBJECT BRIDGE DECK. ANOTHER SET OF DUAL SPEED LIMIT 35 MPH (R2-1) SIGNS SHALL BE PLACED 500 FEET PRIOR TO THE FIRST SET. THE DUAL REDUCED SPEED LIMIT AHEAD 35 MPH (W3-5) SIGNS SHALL BE ERECTED APPROXIMATELY 1000 FEET IN ADVANCE OF THE SECOND SET OF SPEED LIMIT 35 MPH (R2-1) SIGNS.

THE SPEED LIMIT SIGNS MAY BE ERECTED OR UNCOVERED NO MORE THAN 30 MINUTES BEFORE THE ACTUAL START OF THE WORK (I.E. DECK POUR) THAT CAUSES THE WARRANTING CONDITION TO OCCUR. THE SIGNS SHALL BE REMOVED OR COVERED NO LATER THAN 30 MINUTES FOLLOWING REMOVAL OF THE WARRANTING CONDITION, OR SOONER AS DIRECTED BY THE ENGINEER.

NO.	REVISIONS	BY	DATE
3	ADDENDUM 3	MTG	09/21

DESIGNED MTG | CHECKED SJP | DESIGN AGENCY KS Associates Inc.
DRAWN MTG | IN CHARGE HVH | 260 BURNS ROAD, ELYRIA, OHIO 44035

MAINTENANCE OF TRAFFIC NOTES

SANDUSKY COUNTY

M.P. 98.9 AND 99.1

PROJECT 43-22-03

DATE: 9/28/2020

OHIO TURNPIKE AND INFRASTRUCTURE COMMISSION

19004_MN001.dwg; 9/09/21 - 11:24am

A PCMB SHALL BE PLACED INSIDE THE WORK ZONE AT A LOCATION SELECTED BY THE ENGINEER. THE OTIC COMMUNICATION CENTER SHALL BE ADVISED BY THE ZONE PERSON WHEN THE FOLLOWING MESSAGE SHOULD BE ACTIVATED / DEACTIVATED.

35 MPH STRICTLY
AHEAD ENFORCED

A LAW ENFORCEMENT OFFICER WITH EMERGENCY LIGHTS ACTIVATED SHALL BE STATIONED ON THE SHOULDER WITHIN THE 35 MPH SECTION.

A SET OF DUAL SPEED LIMIT 50 MPH (R2-1) SIGNS SHALL BE PLACED 500 FEET AFTER THE BRIDGE DECK TO INDICATE THE RESUMPTION OF THE WORK ZONE SPEED LIMIT. 3

PAYMENT SHALL INCLUDE ALL LABOR, MATERIAL, AND EQUIPMENT NECESSARY TO PERFORM THE WORK AND SHALL BE INCLUDED IN THE LUMP SUM PRICE BID FOR ITEM SP 614 - MAINTAINING TRAFFIC.

MULTI-PLAN, TIME-OF-DAY OPERATION OF WORK ZONE SIGNAL

THE CONTRACTOR SHALL PROVIDE A SIGNALIZED CLOSURE WHEN WORK BELOW THE EXISTING MP 99.1 STRUCTURE REQUIRES A LANE CLOSURE OF STATE ROUTE 510. THE WORK ZONE SIGNAL CONTROL REQUIRED FOR THIS PROJECT AND DETAILED ON THE FOLLOWING SHEETS AND STANDARD CONSTRUCTION DRAWINGS MT-96.11, MT-96.20 AND MT-96.26 SHALL BE CAPABLE OF PROVIDING MULTIPLE TIMING PATTERNS CHOSEN ON A TIME-OF-DAY BASIS.

TRAFFIC CONTROL EQUIPMENT SHALL BE CAPABLE OF TIME-OF-DAY/DAY-OF-WEEK PROGRAMMING; WITH A MINIMUM OF THREE-DIAL, THREE OFFSETS AND THREE SPLITS, OR A MINIMUM OF FIFTEEN SEPARATE TIMING PLANS.

	TIMING PLAN (SECONDS)		
APPROACH	A	B	C
NORTHBOUND GREEN	15	-	-
NORTHBOUND YELLOW	4	-	-
NORTHBOUND ALL RED (INTERNAL CLEARANCE)	15	-	-
SOUTHBOUND GREEN	15	-	-
SOUTHBOUND YELLOW	4	-	-
SOUTHBOUND ALL RED (INTERNAL CLEARANCE)	15	-	-
TOTAL CYCLE LENGTH	68	-	-

TIME OF DAY	SUN	MON	TUE	WED	THUR	FRI	SAT
MIDNIGHT - 7:00 AM	A	A	A	A	A	A	A
7:00 AM - 9:00 AM	A	A	A	A	A	A	A
9:00 AM - 4:00 9M	A	A	A	A	A	A	A
4:00 PM - 6:00 PM	A	A	A	A	A	A	A
6:00 PM - MIDNIGHT	A	A	A	A	A	A	A

THE SIGNAL TIMING PROVIDED ABOVE ARE BASED ON EXISTING TRAFFIC COUNTS. THE INTENT OF THE SIGNAL TIMING IS TO BALANCE VEHICLE DELAY IN BOTH DIRECTIONS. THE CONTRACTOR IS RESPONSIBLE FOR ADJUSTING THE PROPOSED TIMINGS IN ORDER TO REDUCE CONGESTION AND BALANCE DELAY.

PAYMENT IS INCIDENTAL TO THE LUMP SUM BID FOR SP 614 MAINTAINING TRAFFIC.

1

TC-1
W20-5-48
(DUAL)

2

TC-3
(DUAL)

3

TC-42
W3-5-48
(DUAL)

4

TC-2L
W20-5-48
(DUAL)

5

TC-5L
W20-5-48
(DUAL)

6

TC-13
R2-1-48
(DUAL)

7 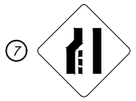
TC-4L
W4-2L-48
(DUAL)

8

TC-13
R2-1-48
(DUAL)

9 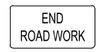

TC-6
G20-2-48
(DUAL)

10

TC-2R
W20-5-48
(DUAL)

11

TC-5R
W20-5-48
(DUAL)

12
TC-4R
W4-2R-48
(DUAL)

13

TC-20
R1-2-48

14
TC-24
R1-2-48

3 NOTE:
THE NOTES ON THIS SHEET HAVE NOT BEEN REVISED. THE NOTES WERE SHIFTED DUE TO NOTES ADDED ON PREVIOUS SHEETS.

DESIGN AGENCY
KS Associates Inc.
260 BURNS ROAD, ELYRIA, OHIO 44035

NO.	REVISIONS	BY	DATE
3	ADDENDUM 3	MTG	09/21

DESIGNED	CHECKED	DRAWN	IN CHARGE
MTG	SJP	MTG	HVH

MAINTENANCE OF TRAFFIC NOTES
SANDUSKY COUNTY
M.P. 98.9 AND 99.1

PROJECT 43-22-03
DATE: 9/28/2020

OHIO TURNPIKE AND INFRASTRUCTURE COMMISSION

19004_MN001.dwg; 9/10/21 - 9:07am

DESIGN SPECIFICATIONS

THIS STRUCTURE CONFORMS TO "STANDARD SPECIFICATIONS FOR HIGHWAY BRIDGES" ADOPTED BY THE AMERICAN ASSOCIATION OF STATE HIGHWAY AND TRANSPORTATION OFFICIALS (AASHTO), 2002 17TH EDITION, AND THE ODOT BRIDGE DESIGN MANUAL.

DESIGN LOADING

DESIGN LOADING: HS20-44, CASE I AND THE ALTERNATE MILITARY LOADING.

DESIGN DATA

CONCRETE CLASS HP4 - COMPRESSIVE STRENGTH 4500 PSI (SUPERSTRUCTURE)

CONCRETE CLASS QC1 - COMPRESSIVE STRENGTH 4000 PSI (SUBSTRUCTURE)

REINFORCING STEEL - ASTM A615 OR A996, GRADE 60, MINIMUM YIELD STRENGTH 60,000 PSI

DECK PROTECTION METHOD

EPOXY COATED REINFORCING STEEL

2-1/2" CONCRETE COVER

MONOLITHIC WEARING SURFACE

MONOLITHIC WEARING SURFACE IS ASSUMED, FOR DESIGN PURPOSES, TO BE 1 INCH THICK.

ORIGINAL CONSTRUCTION PLANS

ORIGINAL CONSTRUCTION PLANS SHOWING THE ORIGINAL ALIGNMENT, PROFILE, AND DETAILS OF THE BRIDGE ARE AVAILABLE ON BID EXPRESS WITH THE OTHER CONTRACT DOCUMENTS.

EXISTING STRUCTURE VERIFICATION

EXISTING STRUCTURE VERIFICATION: DETAILS AND DIMENSIONS SHOWN ON THESE PLANS PERTAINING TO THE EXISTING STRUCTURE HAVE BEEN OBTAINED FROM PLANS OF THE EXISTING STRUCTURE AND FROM FIELD OBSERVATIONS AND MEASUREMENTS. CONSEQUENTLY, THEY ARE INDICATIVE OF THE EXISTING STRUCTURE AND THE PROPOSED WORK BUT THEY SHALL BE CONSIDERED TENTATIVE AND APPROXIMATE. THE CONTRACTOR IS REFERRED TO CMS SECTIONS 501.02 AND 513.04 AND OTIC INSTRUCTION TO BIDDERS ARTICLE 2.1 AND GENERAL CONDITIONS ARTICLE 1.5.

BASE CONTRACT BID PRICES UPON A RECOGNITION OF THE UNCERTAINTIES DESCRIBED ABOVE AND UPON A PREBID EXAMINATION OF THE EXISTING STRUCTURE. HOWEVER, THE COMMISSION WILL PAY FOR ALL PROJECT WORK BASED UPON ACTUAL DETAILS AND DIMENSIONS WHICH HAVE BEEN VERIFIED IN THE FIELD.

CUT LINE CONSTRUCTION JOINT PREPARATION

CUT LINE CONSTRUCTION JOINT PREPARATION: SAW CUT BOUNDARIES OF PROPOSED CONCRETE REMOVALS 1 INCH DEEP. REMOVE CONCRETE TO A ROUGH SURFACE. LEAVE THE EXISTING REINFORCING STEEL, AS REQUIRED IN THE PLANS, IN PLACE. INSTALL DOWEL BARS IF SPECIFIED. PRIOR TO CONCRETE PLACEMENT ABRASIVELY CLEAN JOINT SURFACES AND EXISTING EXPOSED REINFORCEMENT TO REMOVE LOOSE AND DISINTEGRATED CONCRETE AND LOOSE RUST. THOROUGHLY CLEAN THE JOINT SURFACE AND EXPOSED REINFORCEMENT OF ALL DIRT, DUST, RUST OR OTHER FOREIGN MATERIAL BY THE USE OF WATER, AIR UNDER PRESSURE, OR OTHER METHODS THAT PRODUCE SATISFACTORY RESULTS. EXISTING REINFORCING STEEL DOES NOT HAVE TO HAVE A BRIGHT STEEL FINISH, BUT REMOVE ALL PACK AND LOOSE RUST. THOROUGHLY DRENCH EXISTING CONCRETE SURFACES WITH CLEAN WATER AND ALLOW TO DRY TO A DAMP CONDITION BEFORE PLACING CONCRETE.

ITEM 509 REINFORCING STEEL, REPLACEMENT OF EXISTING REINFORCING STEEL

ITEM 509 REINFORCING STEEL, REPLACEMENT OF EXISTING REINFORCING STEEL: REPLACE ALL EXISTING REINFORCING BARS DEEMED BY THE ENGINEER TO BE UNUSABLE BECAUSE OF CORROSION. THE COMMISSION WILL MEASURE THE REPLACEMENT REINFORCING STEEL BY THE NUMBER OF POUNDS ACCEPTED IN PLACE.

REPLACE ALL EXISTING REINFORCING STEEL BARS WHICH ARE TO BE INCORPORATED INTO THE NEW WORK AND ARE DEEMED BY THE ENGINEER TO BE MADE UNUSABLE BY CONCRETE REMOVAL OPERATIONS WITH NEW EPOXY COATED REINFORCING STEEL OF THE SAME SIZE AT NO COST TO THE COMMISSION.

ANY CUTTING, BENDING, OR DOWELING OF BARS NECESSARY TO ACCOMMODATE ANY ESSENTIAL ELEMENT OF WORK RELATED TO THE PROJECT SHALL BE INCLUDED IN THE UNIT BID PRICE BID FOR ITEM SP 509 EPOXY COATED REINFORCING STEEL, GRADE 60, REPLACEMENT OF EXISTING REINFORCING STEEL. A QUANTITY OF 200 LBS HAS BEEN CARRIED TO THE ESTIMATED QUANTITIES FOR USE AS DIRECTED BY THE CHIEF ENGINEER. 3

ITEM 513 - STRUCTURAL STEEL

ALL PROVISIONS OF 513 APPLY. NEW STRUCTURAL STEEL SHALL BE SHOP PRIMED AND TOUCHED UP AS NECESSARY AFTER INSTALLATION PRIOR TO RECEIVING INTERMEDIATE AND FINAL COATS PER SP 514A. THE COST OF SHOP PRIMING SHALL BE INCLUDED WITH ITEM 513 - STRUCTURAL STEEL. 3

ITEM SP 519 - PATCHING OF CONCRETE STRUCTURES (BEARING PEDESTAL REPAIR)

ALL PROVISIONS OF SP 519 APPLY AND AS MODIFIED HEREIN. EXISTING DETERIORATED BEARING PEDESTALS SHALL BE REPLACED AT THE DIRECTION OF THE CHIEF ENGINEER. PRIOR TO REMOVAL, THE CONTRACTOR SHALL SURVEY THE EXISTING BEARING PEDESTAL ELEVATIONS. EXISTING REINFORCING STEEL SHALL REMAIN. ALL LABOR, MATERIALS, AND INCIDENTALS NEEDED TO COMPLETE THE REMOVAL AND REPLACEMENT IN KIND OF THE EXISTING BEARING PEDESTALS SHALL BE INCIDENTAL TO THIS ITEM. A QUANTITY OF 20 EACH HAS BEEN CARRIED TO THE ESTIMATED QUANTITIES TO BE USED AS DIRECTED BY THE CHIEF ENGINEER.

ITEM SP 536 - CONCRETE WEATHERPROOFING

ITEM SP 536 - CONCRETE WEATHERPROOFING SHALL BE APPLIED TO THE FOLLOWING NEW EXPOSED CONCRETE SURFACES OF THE BRIDGE:

- THE TOP OF NEW APPROACH AND ABUTMENT SLABS AND NEW DECK
- ALL SLAB SIDE EDGES
- THE BOTTOM SURFACE OF THE NEW DECK FROM THE EDGE TO THE EXTERIOR STRINGER FLANGE
- ALL EXPOSED CONCRETE SURFACES OF ALL ABUTMENTS AND PIERS. SEALING SHALL NOT BE DONE UNTIL ALL CONCRETE PATCHING REPAIRS HAVE BEEN COMPLETED AND CURED

CARE SHALL BE TAKEN NOT TO APPLY WEATHERPROOFING ON CONSTRUCTION JOINT SURFACES, SURFACES TO RECEIVE JOINT SEALER, OR FASCIA BEAM PAINT.

EXISTING RIGHT OF WAY FENCE

IT IS THE INTENT OF THE PROJECT FOR THE EXISTING RIGHT OF WAY FENCE NEAR THE BRIDGE TO REMAIN. HOWEVER, IF THE CONTRACTOR DEEMS IT NECESSARY TO REMOVE THE FENCE FOR CONSTRUCTION OPERATIONS AS APPROVED BY THE ENGINEER, THE CONTRACTOR SHALL CAREFULLY REMOVE THE FENCE AND REINSTALL IN ACCORDANCE WITH ITEM 607. IF THE FENCE BECOMES DAMAGED DUE TO THE CONTRACTORS OPERATIONS, THE FENCE SHALL BE REPLACED AT NO COST TO THE COMMISSION.

ALL LABOR, MATERIALS, EQUIPMENT, AND INCIDENTALS NECESSARY TO COMPLETE THE WORK SHALL BE CONSIDERED INCIDENTAL TO THE PROJECT AND NO ADDITIONAL COMPENSATION SHALL BE GRANTED.

EROSION CONTROL

IT IS THE INTENT OF THE PROJECT TO NOT DISTURB ANY SEEDED AREAS AND/OR DRAINAGE ELEMENTS. ANY WORK INVOLVING SEEDED AREAS, DRAINAGE ELEMENTS, OR EROSION CONTROL SHALL BE CONSIDERED INCIDENTAL TO THE PROJECT COST AND SHALL BE REPAIRED/PROTECTED AS DIRECTED BY THE ENGINEER.

ALL LABOR, MATERIALS, EQUIPMENT, AND INCIDENTALS NECESSARY TO COMPLETE THE WORK SHALL BE CONSIDERED INCIDENTAL TO THE PROJECT AND NO ADDITIONAL COMPENSATION SHALL BE GRANTED.

WELD ATTACHMENTS

WELD ATTACHMENT OF SUPPORTS FOR CONCRETE DECK FINISHING MACHINE TO AREAS OF THE FASCIA STRINGER FLANGES DESIGNATED "COMPRESSION". DO NOT WELD ATTACHMENTS TO AREAS DESIGNATED "TENSION". FILLET WELDS TO COMPRESSION FLANGES SHALL BE AT LEAST 1" FROM EDGE OF FLANGE, BE NO MORE THAN 2" LONG, AND BE AT LEAST 1/4" FOR THICKNESSES UP TO 3/4" OR 5/16" FOR GREATER THAN 3/4" THICK.

DECK SLAB CONCRETE QUANTITY

THE ESTIMATED QUANTITY OF DECK SLAB CONCRETE IS BASED ON THE CONSTANT DECK SLAB THICKNESS, AS SHOWN, PLUS THE QUANTITY OF CONCRETE THAT FORMS EACH BEAM/GIRDER HAUNCH. THE ESTIMATE ASSUMES A CONSTANT HAUNCH THICKNESS OF 2 INCHES AND A CONSTANT HAUNCH WIDTH EQUAL TO THE TOP FLANGE WIDTH. DEVIATE FROM THIS HAUNCH THICKNESS AS NECESSARY TO PLACE THE DECK SURFACE AT THE FINISHED GRADE.

THE HAUNCH THICKNESS WAS MEASURED AT THE CENTERLINE OF THE BEAM/GIRDER, FROM THE SURFACE OF THE DECK TO THE BOTTOM OF THE TOP FLANGE MINUS THE DECK SLAB THICKNESS. THE AREA OF ALL EMBEDDED STEEL PLATES HAS BEEN DEDUCTED FROM THE HAUNCH QUANTITY IN ACCORDANCE WITH 511.23.

STRAIGHTENING OF STRUCTURAL STEEL MEMBERS

THE PROVISIONS OF ODOT SUPPLEMENTAL SPECIFICATION 849 SHALL APPLY. THE COST OF THE DAMAGE ASSESSMENT, SURFACE PREPARATION, GRINDING, STRAIGHTENING DAMAGED MEMBERS, PAINTING OF THE REPAIR AREA, AND MAINTENANCE OF TRAFFIC TO COMPLETE THIS WORK SHALL BE INCLUDED IN THE LUMP SUM BID PRICE FOR THIS ITEM. SEE DETAIL ON SHEET 45 OF 50 FOR ADDITIONAL INFORMATION.

SCOPE OF WORK (MP 98.9)

- REMOVE EXISTING DECK, SUPERSTRUCTURE STEEL FRAMING, AND BEARINGS
- REMOVE EXISTING ABUTMENT SLABS, DECK EXPANSION JOINTS, GRADE BEAMS, AND TOP PORTION OF ABUTMENT CELLS AS DETAILED
- REMOVE EXISTING APPROACH SLABS
- PLACE FILL IN STAGES TO ACHIEVE SETTLEMENT AND MAINTAIN TRAFFIC PER PHASING PLAN
- INSTALL ROADWAY TO FINISH ELIMINATION OF STRUCTURE

SCOPE OF WORK (MP 99.1)

- REMOVE AND REPLACE EXISTING DECK WITH NEW SINGLE SLOPE BRIDGE PARAPET (ODOT SCD SBR-1-13) AND OTIC MEDIAN PARAPET (CBR-1)
- REMOVE AND REPLACE EXISTING ABUTMENT SLABS AND DECK EXPANSION JOINTS
- REMOVE AND REPLACE EXISTING APPROACH SLABS
- REMOVE EXISTING BEARINGS AND REPLACE WITH ELASTOMERIC BEARINGS AT ABUTMENTS
- RESET BEARINGS AT PIERS
- HEAT-STRAIGHTEN DAMAGED FASCIA BEAM
- PATCH SUBSTRUCTURE PER SP 519
- SEAL CONCRETE SURFACES PER SP 536

SCOPE OF WORK (MP 99.9 SLOPE REPAIR)

- REMOVE EXISTING GUARDRAIL AND LIGHT POLE FOR RE-ERECTION
- REMOVE EXISTING FAILED RETAINING WALL AND SLOPE MATERIAL
- INSTALL PROPOSED TOE KEY AND SLOPE MATERIAL
- RE-ERECT LIGHT POLE ON NEW FOUNDATION AND REINSTALL GUARDRAIL

DESIGN AGENCY: KS Associates Inc. 260 BURNS ROAD, ELYRIA, OHIO 44035

NO.	REVISIONS	BY	DATE
3	ADDENDUM 3	RAP	09/21

DESIGNED RAP | CHECKED RY | DRAWN RAP | IN CHARGE HVH

STRUCTURE NOTES

SANDUSKY COUNTY

M.P. 98.9 AND 99.1

PROJECT 43-22-03

DATE: 9/28/2020

OHIO TURNPIKE AND INFRASTRUCTURE COMMISSION

19004_SN001.dwg; 9/09/21 - 1:52pm

ESTIMATED QUANTITIES

ITEM	TOTAL	UNIT	ITEM DESCRIPTION	GENERAL	M.P. 98.9	M.P. 99.1	SLOPE	SHT NO.
			GENERAL					
IB. ART. 6	LUMP SUM	LUMP SUM	PREMIUM FOR CONTRACT PERFORMANCE BOND AND PAYMENT BOND	LUMP SUM				
SP 614	LUMP SUM	LUMP SUM	MAINTAINING TRAFFIC	LUMP SUM				
SP 619	LUMP SUM	LUMP SUM	FIELD OFFICE	LUMP SUM				
SP 623	LUMP SUM	LUMP SUM	CONSTRUCTION LAYOUT SURVEY	LUMP SUM				
624	LUMP SUM	LUMP SUM	MOBILIZATION	LUMP SUM				
			ROADWAY					
201	LUMP SUM	LUMP SUM	CLEARING AND GRUBBING	LUMP SUM				
202	225	FOOT	GUARDRAIL REMOVED		100		125	
202	50	FOOT	GUARDRAIL REMOVED FOR REUSE				50	
202	8	EACH	BRIDGE TERMINAL ASSEMBLY REMOVED		4	4		
202	582	SQ YD	PAVEMENT REMOVED		443		139	
202	80	FOOT	CONCRETE BARRIER REMOVED		40	40		
202	125	FOOT	CURB REMOVED				125	
202	495 2	FOOT	FENCE REMOVED		495	2		2
203	24,418	CU YD	EMBANKMENT, AS PER PLAN 2		23,230		1,188	29
203	712	CU YD	EXCAVATION		616	96		
203	1,088	CU YD	EXCAVATION, AS PER PLAN				1,088	50
~~203~~	~~667~~	~~CU YD~~	~~EXCAVATION OF SUBGRADE~~		~~334~~	~~333~~	2	
204 2	6,518	SQ YD	SUBGRADE COMPACTION		5,946	433	139	2
204	9	HOUR	PROOF ROLLING		8		1	
254	2,951	SQ YD	PAVEMENT PLANING, ASPHALT CONCRETE (3")		307	2,644		
SP 302	1,936	CU YD	ASPHALT CONCRETE BASE, PG64-22		1,912		24	
SP 304	1,748	CU YD	AGGREGATE BASE		1,652	72	24	2
SP 304	394	CU YD	AGGREGATE BASE (TOE KEY)				394	
407	2,117	GAL	NON-TRACKING TACK COAT		1,707	397	13	
441	8	CU YD	2" ASPHALT CONCRETE SURFACE COURSE, TYPE 1, (448), PG64-22				8	
SP 402 2	406	CU YD	ASPHALT CONCRETE INTERMEDIATE COURSE, PG 70-22 (FR) (T=1 3/4") 2		277	129		
SP 404	290	CU YD	ASPHALT CONCRETE SURFACE COURSE, USING CRUSHED SLAG, PG 70-22 (FR) (T=1 1/4")		198	92		
SP 451	100	SQ YD	FULL DEPTH PAVEMENT REPAIRS (ASPHALT)			100		
SP 605	1,400	FOOT	6" SHALLOW PIPE UNDERDRAIN, WITH FABRIC WRAP		1,400			
SP 605	3,500	FOOT	6" BASE PIPE UNDERDRAIN		3,500			
606	50	FOOT	GUARDRAIL REBUILT				50	
606	525	FOOT	GUARDRAIL, TYPE MGS, USING STEEL POSTS		525			
606	125	FOOT	GUARDRAIL, TYPE MGS, USING LONG STEEL POSTS				125	
606	2	EACH	MGS BRIDGE TERMINAL, TYPE 1, USING STEEL POSTS			2		
606	2	EACH	MGS BRIDGE TERMINAL, TYPE 2, USING STEEL POSTS			2		
607	360	FOOT	FENCE, TYPE 47		360			
609	825	FOOT	ASPHALT CONCRETE CURB, TYPE 1		700		125	
SP 611	100	FOOT	6" CONDUIT, TYPE F, 707.33		100			
SP 611	5	EACH	CATCH BASIN ADJUSTED TO GRADE		3	2		
~~614~~	~~LUMP SUM~~	~~LUMP SUM~~	~~DETOUR SIGNING~~	~~LUMP SUM~~ 2				
614	5	EACH	REPLACEMENT SIGN	5				
614	5	EACH	WORK ZONE IMPACT ATTENUATOR FOR 24" WIDE HAZARDS (UNIDIRECTIONAL OR BIDIRECTIONAL)	5				
614	1,156	DAYS	PORTABLE CHANGEABLE MESSAGE SIGN, AS PER PLAN	1,156				4
614 3	10,272	HOURS	ZONE PERSON	10,272 3				
614	280	EACH	OBJECT MARKER, 1-WAY	280 3				
SPECIAL	15,000	FOOT	"SNAP" MILL AND FILL	15,000				
SP 614C	7.0	MILE	REMOVAL OF PAVEMENT MARKING	7.0				
SP 621	212	EACH	RAISED PAVEMENT MARKING, AS PER PLAN #1 3	212				
SP 621	248	EACH	RAISED PAVEMENT MARKING, AS PER PLAN #2	248				2
SP 622	8,240 2	FOOT	TEMPORARY PORTABLE BARRIER	7,940			300	
SP 622	1,720	FOOT	TEMPORARY PORTABLE BARRIER, BRIDGE MOUNTED	1,720				
622	350	FOOT	CONCRETE BARRIER, TYPE B-50, AS PER PLAN 2		300	50	2	
~~622~~	~~50~~	~~FOOT~~	~~CONCRETE BARRIER, TYPE D~~			~~50~~		
623	1	EACH	MONUMENT BOX ADJUSTED TO GRADE			1	3	
625	1	EACH	LIGHT POLE, MISC.: REMOVAL, STORAGE, REERECTION				1	
625	1	EACH	LIGHT POLE FOUNDATION REMOVAL AND DISPOSAL				1	
625	1	EACH	LIGHT POLE FOUNDATION, 24" X 10' DEEP				1	
SP 626	2	EACH	BARRIER REFLECTOR, TYPE A (WHITE)				2	
630	6	EACH	SIGNING MISC.: LOW CLEARANCE SIGN			6		
630	16	SQ FT	SIGNING MISC.: ADDITIONAL SIGNS GROUND MOUNTED, AS PER DIRECTED BY THE ENGINEER	16				
642	7.0	MILE	PAVEMENT MARKING MISC.: FINAL PAVEMENT MARKING PREPARATION	7.0				
642	0.53	MILE	EDGE LINE, 4", TYPE 1		0.25	0.25	0.03	
642	0.50	MILE	LANE LINE, 4", TYPE 1		0.25	0.25		
659 2	548	CU YD	TOPSOIL		486 2		62	
659	4,931	SQ YD	SEEDING AND MULCHING, AS PER PLAN		4,375		556	13
671	556	SQ YD	EROSION CONTROL MAT				556	

ITEM	TOTAL	UNIT	ITEM DESCRIPTION	GENERAL	M.P. 98.9	M.P. 99.1	SLOPE	SHT NO.
832	100,000	EACH	EROSION CONTROL	100,000				
832	LUMP SUM	LUMP SUM	STORM WATER POLLUTION PROTECTION PLAN	LUMP SUM				
SPECIAL	125	FOOT	BENCHING SLOPE DRAIN				125	50
			STRUCTURES					
ITEM	TOTAL	UNIT	ITEM DESCRIPTION	GENERAL	M.P. 98.9	M.P. 99.1	SLOPE	SHT NO.
SP 202	LUMP SUM	LUMP SUM	PORTIONS OF STRUCTURE REMOVED		LUMP SUM	LUMP SUM		
503	LUMP SUM	LUMP SUM	COFFERDAMS AND EXCAVATION BRACING		LUMP SUM			
SP 509	132,237	POUND	EPOXY COATED REINFORCING STEEL, GRADE 60			132,237		
SP 509	200	POUND	EPOXY COATED REINFORCING STEEL, GRADE 60, REPLACEMENT OF EXISTING REINFORCING STEEL			200	3	
SP 511B 1	94	CU. YD.	CLASS HP4 CONCRETE, ABUTMENT SLABS 1			94		
SP 511B	350	CU. YD.	CLASS HP4 CONCRETE, SUPERSTRUCTURE DECK SLAB			350		
SP 511B	75	CU. YD.	CLASS S CONCRETE, BARRIERS AND PARAPETS, USING TYPE 1 CEMENT			75		
SP 511B	12	CU. YD.	CLASS HP4 CONCRETE FOR PREPLACEMENT TESTING			12		
~~516~~	~~36~~	~~EACH~~	~~ELASTOMERIC BEARING PAD~~			~~36~~	2	
516 2	20	EACH	RESET BEARING			20	2	
SP 516A	40	FOOT	CRACK REPAIR USING EPOXY INJECTION			40		
SP 516B	942	FOOT	SEALING OF CONSTRUCTION JOINTS			942		
SP 516G	18	EACH	REPLACE EXPANSION BEARING DEVICE			18		
SP 516J	18	EACH	REPLACE FIXED BEARING DEVICE			18		
~~518~~	~~53~~	~~CU. YD.~~	~~POROUS BACKFILL WITH GEOTEXTILE FABRIC~~			~~53~~	2	
~~518~~	~~260~~	~~FOOT~~	~~6" PERFORATED CORRUGATED PLASTIC PIPE~~			~~260~~		
~~518~~	~~60~~	~~FOOT~~	~~6" NON-PERFORATED CORRUGATED PLASTIC PIPE~~			~~60~~		
SP 519	80	SQ. FT.	PATCHING OF CONCRETE STRUCTURES			80	3	
SP 519	20	EACH	PATCHING OF CONCRETE STRUCTURES (BEARING PEDESTAL REPAIR)			20		14
526	433	SQ. YD.	REINFORCED CONCRETE APPROACH SLABS			433		
SP 527	1	LUMP SUM	FALSEWORK, TEMPORARY BRACING AND PROTECTIVE STRUCTURES			LUMP SUM		
SP 533	132	FOOT	3" CONTINUOUS STRIP SEAL IN STRUCTURAL STEEL JOINT			132		
SP 533A	132	FOOT	ELASTOMERIC COMPRESSION SEAL IN STRUCTURAL STEEL JOINT			132		
SP 536	2,082	SQ. YD.	CONCRETE WEATHERPROOFING, DECK AND APPROACH SLABS			2,082		
SP 536	938	SQ. YD.	CONCRETE WEATHERPROOFING, SUBSTRUCTURE			938		
849	LUMP SUM	LUMP SUM	STRAIGHTENING DAMAGED MEMBERS			LUMP SUM		14, 44, 45

DESIGN AGENCY: KS Associates Inc. 260 BURNS ROAD, ELYRIA, OHIO 44035

NO.	REVISIONS	BY	DATE
1	ADDENDUM 1	RAP	08/21
2	ADDENDUM 2	RAP	08/21
3	ADDENDUM 3	RAP	09/21

CALC-ROAD MTG | CHECKED SJP/RY
CALC-STRUCT RAP | IN CHARGE HVH

ESTIMATED QUANTITIES

SANDUSKY COUNTY

M.P. 98.9 AND 99.1

PROJECT 43-22-03

DATE: 9/28/2020

15 / 50

OHIO TURNPIKE AND INFRASTRUCTURE COMMISSION

19004_GG001.dwg: 9/09/21 - 1:53pm

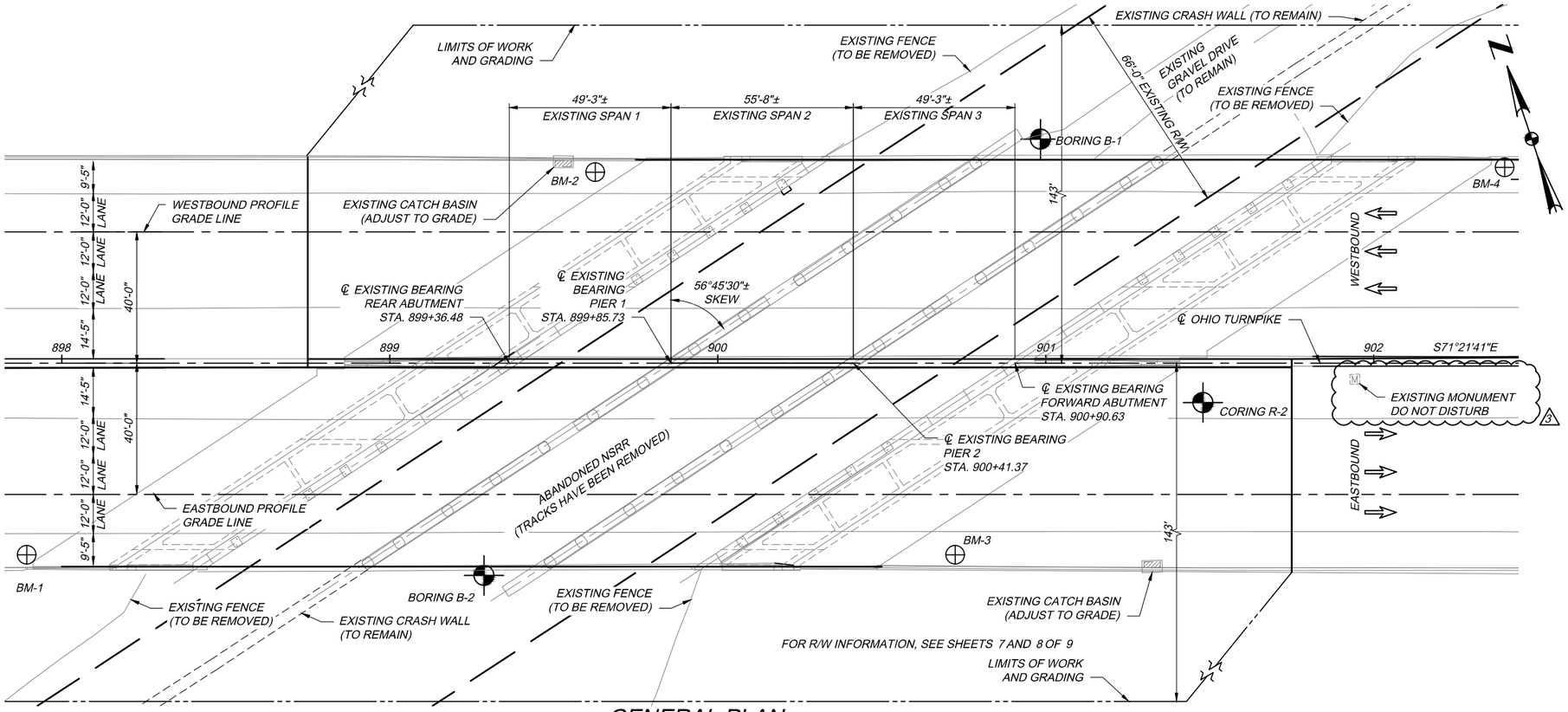

GENERAL PLAN

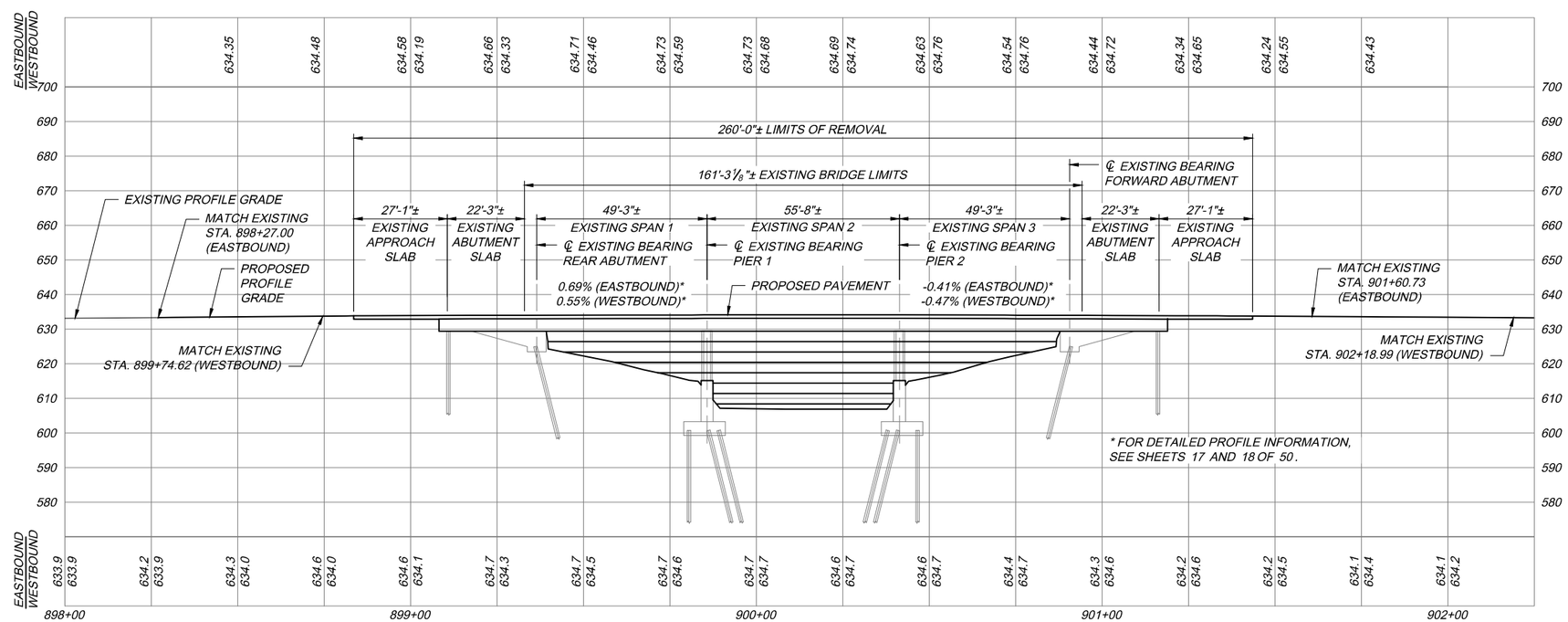

PROFILE ALONG ℄ OHIO TURNPIKE

EXISTING STRUCTURE

TYPE:	THREE SPAN CONTINUOUS, NON-COMPOSITE STEEL BEAM WITH REINFORCED CONCRETE DECK AND SUBSTRUCTURE
SPANS:	49'-3 1/16"±, 55'-7 11/16"±, 49'-3 1/16"± C/C BEARINGS
ROADWAY:	59'-10"± TOE/TOE PARAPETS (EACH DIRECTION)
ALIGNMENT:	TANGENT
SKEW:	56°45'30"± LEFT FORWARD
WEARING SURFACE:	MONOLITHIC CONCRETE
LOADING:	CF-2000
BUILT:	1954 (ORIGINAL CONSTRUCTION) 1984 (WIDENED) 1996 (WIDENED)
SFN:	7229526
APPROACH SLABS:	15'-0"

PROPOSED STRUCTURE

PROPOSED WORK:

- REMOVE EXISTING DECK, SUPERSTRUCTURE STEEL FRAMING, AND BEARINGS. PIERS AND CRASH WALLS TO REMAIN
- REMOVE EXISTING ABUTMENT SLABS, DECK EXPANSION JOINTS, GRADE BEAMS, AND TOP PORTION OF ABUTMENT CELLS AS DETAILED
- REMOVE EXISTING APPROACH SLABS
- PLACE FILL IN STAGES TO ACHIEVE SETTLEMENT AND MAINTAIN TRAFFIC PER PHASING PLAN
- INSTALL ROADWAY TO FINISH ELIMINATION OF STRUCTURE

TYPE:	STRUCTURE ELIMINATED USING FILL
SPANS:	N/A
ROADWAY:	59'-10" TOE OF MEDIAN BARRIER TO FACE OF GUARDRAIL. 14'-5" LEFT SHOULDER, 3 12'-0" LANES, 9'-5" RIGHT SHOULDER (EACH DIRECTION)
ALIGNMENT:	TANGENT
COORDINATES:	41°22'25.63" N 82°58'43.88" W

LEGEND

- PROJECT BORING LOCATION (B-#)
- PAVEMENT CORING LOCATION (R-#)
- BENCHMARK LOCATION

BENCHMARK DATA
BM #1 - MAG NAIL SET IN EASTBOUND RIGHT SHOULDER, STA. 897+89.33, 58.38' RT, ELEV. 633.65
BM #2 - MAG NAIL SET IN WESTBOUND RIGHT SHOULDER, STA. 899+62.67, 58.22' LT, ELEV. 634.23
BM #3 - MAG NAIL SET IN EASTBOUND RIGHT SHOULDER, STA. 900+72.45, 58.40' RT, ELEV. 634.13
BM #4 - MAG NAIL SET IN WESTBOUND RIGHT SHOULDER, STA. 902+39.95, 59.67' LT, ELEV. 633.77

DESIGN AGENCY: KS Associates Inc. 260 BURNS ROAD, ELYRIA, OHIO 44035

NO.	REVISIONS	BY	DATE
3	ADDENDUM 3	MTG	09/21

DESIGNED RAP | CHECKED RY | DRAWN RAP | IN CHARGE HVH

GENERAL PLAN AND PROFILE
OHIO TURNPIKE OVER ABANDONED RAILROAD
SANDUSKY COUNTY
MP 98.9

PROJECT 43-22-03
DATE: 9/28/2020

1 / 9

21 / 50

OHIO TURNPIKE AND INFRASTRUCTURE COMMISSION

MP 98.9_SP001.dwg; 9/07/21 - 1:28pm

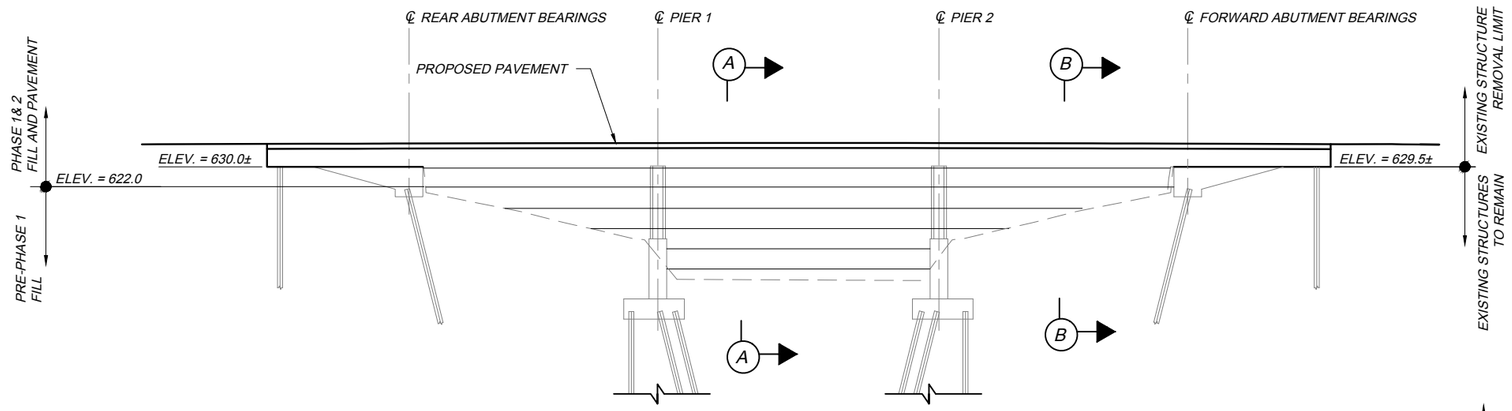

ELEVATION VIEW

NOTE:
- FOR PROFILE INFORMATION, SEE SHEET ## OF 50.
- FOR SUBSTRUCTURE REMOVAL DETAILS, SEE SHEETS 2 THROUGH 4 OF 9.

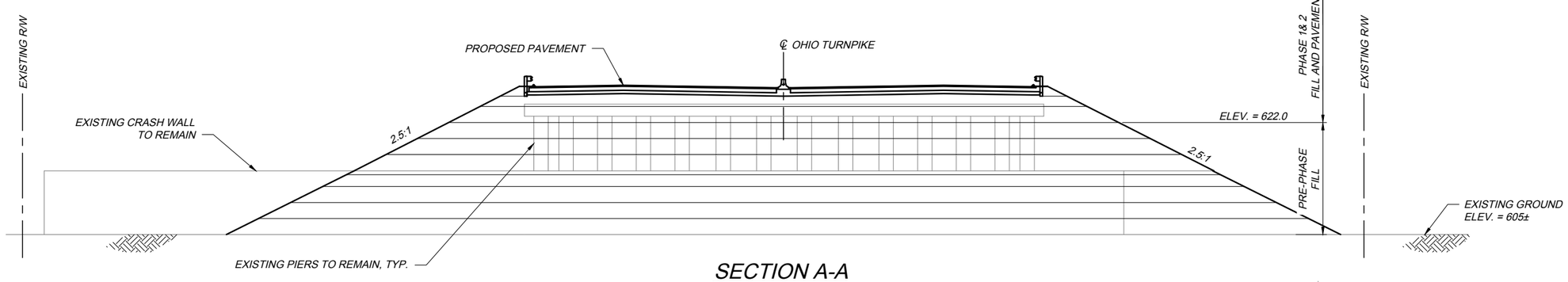

SECTION A-A

PIER 2 LOOKING UPSTATION
(NOT TO SCALE, PILES NOT SHOWN)

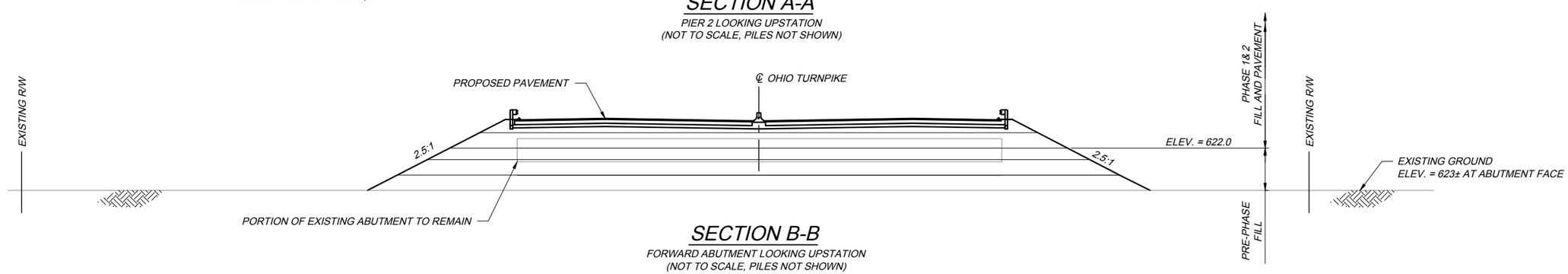

SECTION B-B

FORWARD ABUTMENT LOOKING UPSTATION
(NOT TO SCALE, PILES NOT SHOWN)

GEOTECHNICAL NOTES:

1. THE CALCULATED MAXIMUM SETTLEMENT IS 3.1" AT THE PIERS FOR CONVENTIONAL EMBANKMENT FOR 28' MAXIMUM FILL. REFER TO THE GEOTECHNICAL INVESTIGATION REPORT FOR DETAILED INFORMATION.
2. FILL SHALL BE PLACED AND COMPACTED IN UNIFORM LAYERS NOT MORE THAN 8 INCHES THICK (LOOSE MEASURE) TO THE ESTIMATED 28' MAXIMUM AND ADEQUATELY KEYED INTO STRIPPED AND SCARIFIED SOILS. THE SITE SHALL BE CLEARED AND GRUBBED; NO EXCAVATION IS REQUIRED FOR THE PLACEMENT OF THE FILL.
3. THE TIME REQUIRED TO ACHIEVE CONSOLIDATION IN THE SOIL LAYERS SUPPORTING THE PROPOSED FILL IS CALCULATED TO OCCUR ON THE ORDER OF 8 TO 12 WEEKS. BECAUSE THE FILL IS NOT PLACED INSTANTANEOUSLY, A SIGNIFICANT PORTION OF CONSOLIDATION WILL OCCUR CONCURRENTLY WITH FILL OPERATIONS DURING CONSTRUCTION. THE REMAINING SETTLEMENT OVER THE FOLLOWING 12 MONTHS IS ANTICIPATED TO BE LESS THAN 1-INCH.
4. THE EXPOSED PORTIONS OF THE SUBSTRUCTURE ELEMENTS SHALL BE COVERED WITH LOW VISCOSITY BITUMINOUS ASPHALT AND THEN COVERED OR WRAPPED WITH A DURABLE THICK PLASTIC (VISQUEEN) TO REDUCE THE EFFECT OF DOWNDRAG FROM THE PROPOSED FILL. ALL LABOR, MATERIALS, AND INCIDENTALS TO COMPLETE THIS WORK SHALL BE INCIDENTAL TO ITEM 203 - EMBANKMENT, AS PER PLAN. 3

NO.	REVISIONS	BY	DATE
3	ADDENDUM 3	RAP	09/21
-	-	-	-

DESIGN AGENCY: KS Associates Inc.
260 BURNS ROAD, ELYRIA, OHIO 44035

DESIGNED SS | CHECKED RY | DRAWN SS | IN CHARGE HVH

SEQUENCE OF CONSTRUCTION
OHIO TURNPIKE OVER ABANDONDED RAILROAD
SANDUSKY COUNTY
MP 98.9

PROJECT 43-22-03
DATE: 9/28/2020

8 / 9

28 / 50

OHIO TURNPIKE AND INFRASTRUCTURE COMMISSION

MP 98.9_SC002.dwg; 9/09/21 - 12:13pm

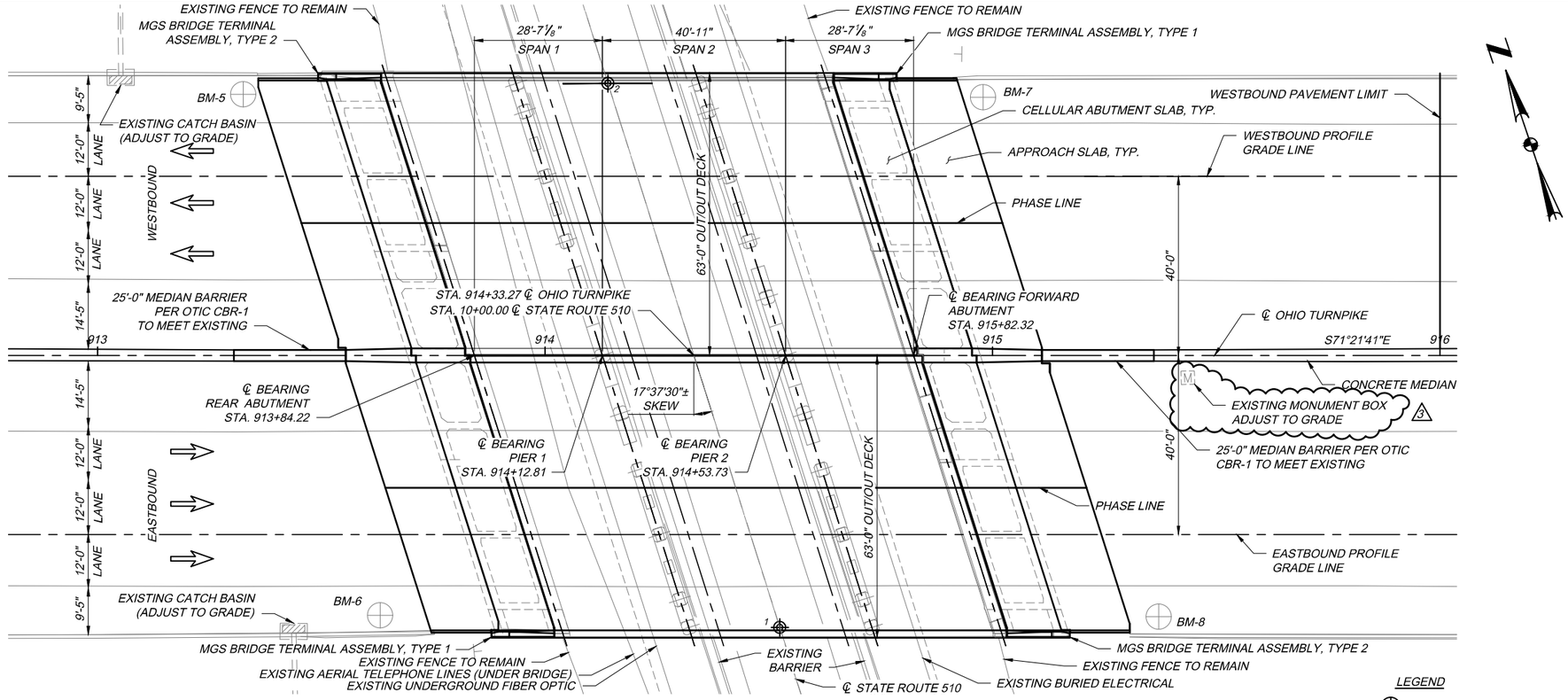

GENERAL PLAN

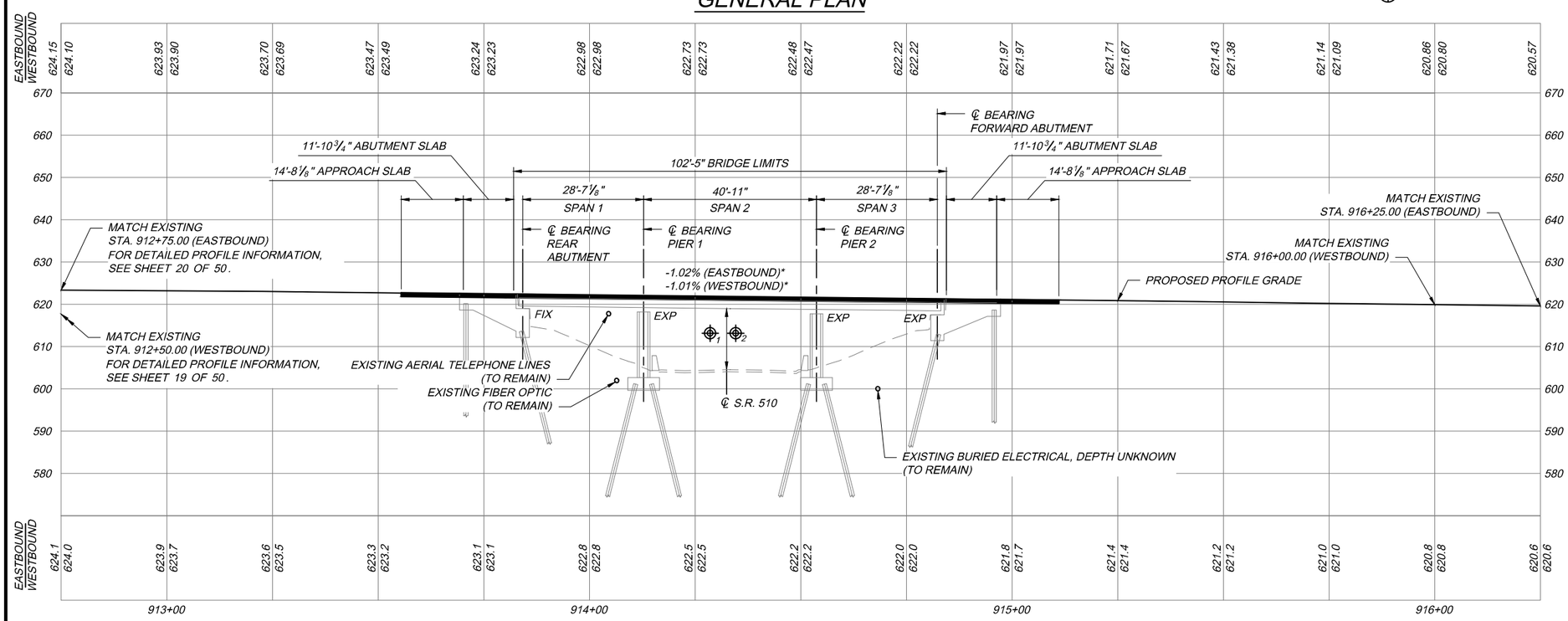

PROFILE ALONG ℄ OHIO TURNPIKE

EXISTING STRUCTURE

TYPE:	THREE SPAN CONTINUOUS, NON-COMPOSITE STEEL BEAM WITH REINFORCED CONCRETE DECK AND SUBSTRUCTURE
SPANS:	28'-7 1/8"±, 40'-11"±, 28'-7 1/8"± C/C BEARINGS
ROADWAY:	59'-10"± TOE/TOE PARAPETS (EACH DIRECTION)
ALIGNMENT:	TANGENT
SKEW:	17°37'30"± RIGHT FORWARD
WEARING SURFACE:	MONOLITHIC CONCRETE
LOADING:	CF-2000
BUILT:	1954 (ORIGINAL CONSTRUCTION) 1984 (WIDENED) 1996 (WIDENED)
SFN:	7229550
APPROACH SLABS:	15'-0"

PROPOSED STRUCTURE

PROPOSED WORK:

- REMOVE AND REPLACE EXISTING DECK WITH NEW SINGLE SLOPE BRIDGE PARAPET (ODOT SCD SBR-1-13) AND OTIC JERSEY STYLE MEDIAN PARAPET
- REMOVE AND REPLACE EXISTING ABUTMENT SLABS AND DECK EXPANSION JOINTS
- REMOVE AND REPLACE EXISTING APPROACH SLABS
- REMOVE EXISTING BEARINGS AND REPLACE WITH ELASTOMERIC BEARINGS AT ABUTMENTS
- RESET BEARINGS AT PIERS
- HEAT-STRAIGHTEN DAMAGED FASCIA BEAM
- PATCH SUBSTRUCTURE PER SP 519
- SEAL CONCRETE SURFACES PER SP 536

TYPE:	THREE SPAN CONTINUOUS, NON-COMPOSITE STEEL BEAM WITH REINFORCED CONCRETE DECK AND SUBSTRUCTURE
SPANS:	28'-7 1/8", 40'-11", 28'-7 1/8" C/C BEARINGS
ROADWAY:	59'-10" TOE/TOE PARAPETS (EACH DIRECTION)
ALIGNMENT:	TANGENT
SKEW:	17°37'30" RIGHT FORWARD
WEARING SURFACE:	1" MONOLITHIC CONCRETE
LOADING:	HS20-44 CASE I AND THE ALTERNATE MILITARY LOADING
APPROACH SLABS:	15'-0" (AS-1)
COORDINATES:	41°22'20.97" N 82°58'25.15" W

POINT OF MINIMUM VERTICAL CLEARANCE		
DIRECTION	EXISTING	PROPOSED
1 NORTHBOUND	14'-9 1/4"±	14'-9 1/4"
2 SOUTHBOUND	15'-0 1/4"±	15'-0 1/4"

BENCHMARK DATA
BM #5 - MAG NAIL SET IN WB RIGHT SHOULDER, STA. 913+32.57, 58.30' LT, ELEV. 623.14
BM #6 - MAG NAIL SET IN EB RIGHT SHOULDER, STA. 913+63.13, 58.08' RT, ELEV. 622.95
BM #7 - MAG NAIL SET IN WB RIGHT SHOULDER, STA. 914+97.87, 57.66' LT, ELEV. 621.47
BM #8 - MAG NAIL SET IN EB RIGHT SHOULDER, STA. 915+37.12, 58.34' RT, ELEV. 621.06

DESIGN AGENCY: KS Associates Inc. 260 BURNS ROAD, ELYRIA, OHIO 44035

REVISIONS			
NO.		BY	DATE
3	ADDENDUM 3	MTG	09/21

DESIGNED	CHECKED	DRAWN	IN CHARGE
RAP	RY	RAP	HVH

GENERAL PLAN AND PROFILE
OHIO TURNPIKE OVER STATE ROUTE 510
SANDUSKY COUNTY
MP 99.1

PROJECT 43-22-03
DATE: 9/28/2020

1 / 18

30 / 50

OHIO TURNPIKE AND INFRASTRUCTURE COMMISSION

MP 99.1_SP001.dwg; 9/07/21 - 2:00pm

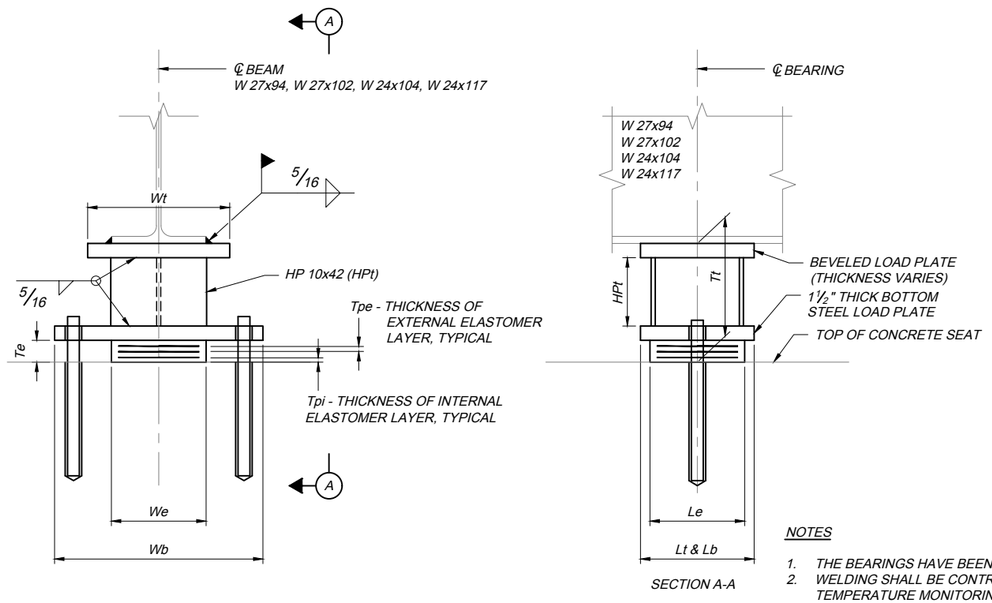

SECTION A-A

REAR ABUTMENT - BEAMS 1-6 AND 13-18

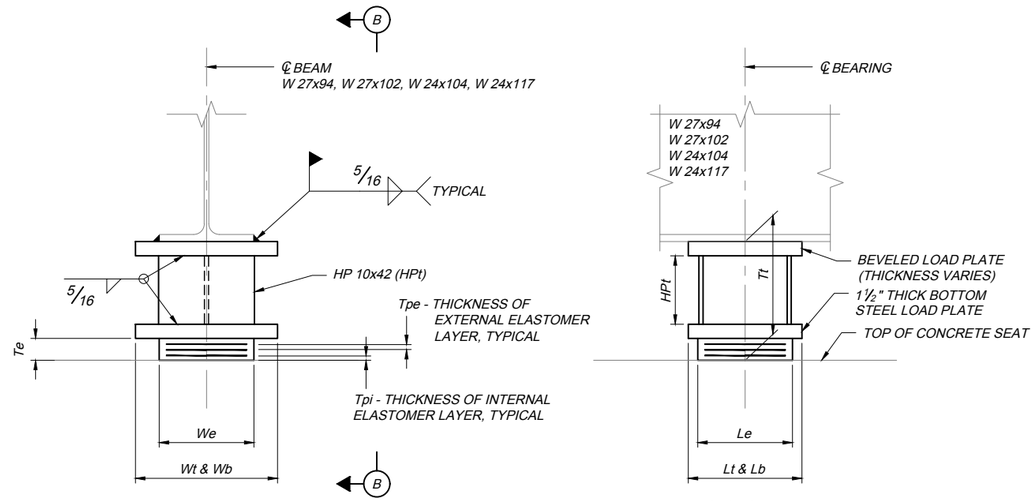

SECTION B-B

FORWARD ABUTMENT

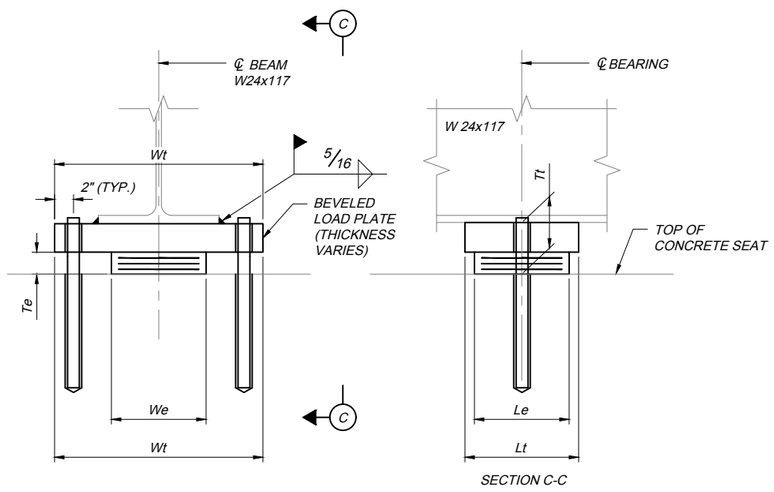

SECTION C-C

REAR ABUTMENT - BEAMS 7-12

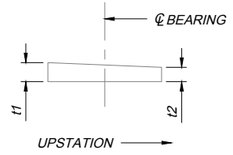

BEVELED STEEL LOAD PLATE

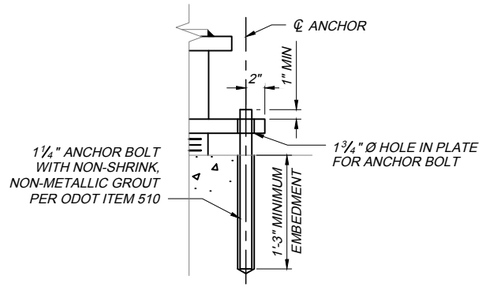

TYPICAL ANCHOR DETAIL

NOTES

1. THE BEARINGS HAVE BEEN DESIGNED UNDER SECTION 14.7.6 OF THE AASHTO LRFD BRIDGE DESIGN SPECIFICATION, SEVENTH EDITION.
2. WELDING SHALL BE CONTROLLED SO THAT THE PLATE TEMPERATURE AT THE ELASTOMER BONDED SURFACE DOES NOT EXCEED 300 °F AS DETERMINED BY USE OF PYROMETRIC STICKS OR OTHER TEMPERATURE MONITORING DEVICES.
3. BEARING REPOSITIONING: IF THE BEARINGS ARE SET AT AN AMBIENT TEMPERATURE HIGHER THAN 80°F OR LOWER THAN 40°F AND THE BEARING SHEAR DEFLECTION EXCEEDS 1/8 OF THE BEARING HEIGHT AT 60°F±10°F, THE GIRDERS SHALL BE RAISED TO ALLOW THE BEARING TO RETURN TO THEIR UNDEFORMED SHAPE AT 60°F±10°F.
4. THE STEEL LOAD PLATE SHALL BE ASTM A709 GRADE 36 STEEL AND SHALL BE PAINTED IN ACCORDANCE WITH SP 514A. SEE SP 514A FOR PAYMENT INFORMATION.
5. THE STEEL LOAD PLATE SHALL BE BONDED BY VULCANIZATION TO THE ELASTOMER DURING THE MODELING PROCESS.
6. SUPERSTRUCTURE SUPPORT,AND/OR JACKING AND RESETTING OF BEARINGS AS DIRECTED BY THE ENGINEER SHALL BE PERFORMED IN ACCORDANCE WITH ITEM 516 AND SP 516G.
7. THE UNIT BID PRICE SHALL INCLUDE ALL MATERIALS, LABOR AND INCIDENTALS NECESSARY TO FURNISHED AND INSTALL LAMINATED ELASTOMERIC BEARINGS. SAMPLE BEARINGS SHALL NOT BE MEASURED FOR PAYMENT.
8. ANCHOR RODS SHALL BE PLACED AS PER ODOT CMS 510 AND INCIDENTAL TO THE UNIT BID PRICE FOR THE ELASTOMERIC BEARINGS.
9. ALL BEARINGS SHALL BE MARKED PRIOR TO SHIPPING. THE MARKS SHALL INDICATE THE BEARING LOCATION ON THE BRIDGE AND A DIRECTION ARROW THAT POINTS UP STATION. ALL MARKS SHALL BE PERMANENT AND BE VISIBLE AFTER THE BEARING IS INSTALLED.
10. ~~BEAM LINES ARE NUMBERED BEGINNING FROM THE LEFT AT BEAM NUMBER 1 (WESTBOUND FASCIA BEAM), INCREASING TO BEAM 18 (EASTBOUND FASCIA BEAM).~~ 3
11. CONTRACTOR MAY REMOVE AND REINSTALL THE EXISTING END DIAPHRAGMS AS NEEDED TO PERMIT DOWEL INSTALLATION. THIS WORK SHALL BE CONSIDERED INCIDENTAL TO THE BEARING REPLACEMENTS.

BEARING LOCATION		BEAM LINE	EXISTING TYPE	EXISTING HEIGHT	DEAD LOAD (KIPS)	LIVE LOAD (KIPS)	TOTAL LOAD (DL+LL, KIPS)	Tpi	No. OF Tpi'S	Tpe (1 EA)	No. INTERNAL LAMINATES	Te	We	Le	Wt	Lt	Wb	Lb	t1	t2	HPt	Tt
REAR ABUTMENT (FIXED)	WESTBOUND	1	B-100	10 3/4"	11	50	61	0.28"	8	0.19"	8	3.02"	10"	10"	15"	12"	22"	12"	1 5/8"	1 1/2"	4 11/16"	10 3/4"
		2	E	12 5/8"	11	50	61	0.28"	8	0.19"	8	3.02"	10"	10"	12"	12"	22"	12"	1 5/8"	1 1/2"	6 9/16"	12 5/8"
		3	E	12 5/8"	11	50	61	0.28"	8	0.19"	8	3.02"	10"	10"	12"	12"	22"	12"	1 5/8"	1 1/2"	6 9/16"	12 5/8"
		4	E	12 5/8"	11	50	61	0.28"	8	0.19"	8	3.02"	10"	10"	12"	12"	22"	12"	1 5/8"	1 1/2"	6 9/16"	12 5/8"
		5	E	12 5/8"	11	50	61	0.28"	8	0.19"	8	3.02"	10"	10"	12"	12"	22"	12"	1 5/8"	1 1/2"	6 9/16"	12 5/8"
		6	E	12 5/8"	11	50	61	0.28"	8	0.19"	8	3.02"	10"	10"	12"	12"	22"	12"	1 5/8"	1 1/2"	6 9/16"	12 5/8"
		7	F-100	5 3/4"	11	50	61	0.28"	8	0.19"	8	3.02"	10"	10"	22"	12"			2 13/16"	2 11/16"		5 3/4"
		8	F-100	5 3/4"	11	50	61	0.28"	8	0.19"	8	3.02"	10"	10"	22"	12"			2 13/16"	2 11/16"		5 3/4"
		9	F-100	5 3/4"	11	50	61	0.28"	8	0.19"	8	3.02"	10"	10"	22"	12"			2 13/16"	2 11/16"		5 3/4"
	EASTBOUND	10	F-100	5 3/4"	11	50	61	0.28"	8	0.19"	8	3.02"	10"	10"	22"	12"			2 13/16"	2 11/16"		5 3/4"
		11	F-100	5 3/4"	11	50	61	0.28"	8	0.19"	8	3.02"	10"	10"	22"	12"			2 13/16"	2 11/16"		5 3/4"
		12	F-100	5 3/4"	11	50	61	0.28"	8	0.19"	8	3.02"	10"	10"	22"	12"			2 13/16"	2 11/16"		5 3/4"
		13	E	12 5/8"	11	50	61	0.28"	8	0.19"	8	3.02"	10"	10"	12"	12"	22"	12"	1 5/8"	1 1/2"	6 9/16"	12 5/8"
		14	E	12 5/8"	11	50	61	0.28"	8	0.19"	8	3.02"	10"	10"	12"	12"	22"	12"	1 5/8"	1 1/2"	6 9/16"	12 5/8"
		15	E	12 5/8"	11	50	61	0.28"	8	0.19"	8	3.02"	10"	10"	12"	12"	22"	12"	1 5/8"	1 1/2"	6 9/16"	12 5/8"
		16	E	12 5/8"	11	50	61	0.28"	8	0.19"	8	3.02"	10"	10"	12"	12"	22"	12"	1 5/8"	1 1/2"	6 9/16"	12 5/8"
		17	E	12 5/8"	11	50	61	0.28"	8	0.19"	8	3.02"	10"	10"	12"	12"	22"	12"	1 5/8"	1 1/2"	6 9/16"	12 5/8"
		18	B-100	10 3/4"	11	50	61	0.28"	8	0.19"	8	3.02"	10"	10"	15"	12"	22"	12"	1 5/8"	1 1/2"	4 11/16"	10 3/4"
FORWARD ABUTMENT (EXPANSION)	WESTBOUND	1	R-75	9 3/4"	11	50	61	0.28"	8	0.19"	8	3.02"	10"	10"	15"	12"	15"	12"	1 5/8"	1 1/2"	3 11/16"	9 3/4"
		2	D	12 5/8"	11	50	61	0.28"	8	0.19"	8	3.02"	10"	10"	12"	12"	12"	12"	1 5/8"	1 1/2"	6 9/16"	12 5/8"
		3	D	12 5/8"	11	50	61	0.28"	8	0.19"	8	3.02"	10"	10"	12"	12"	12"	12"	1 5/8"	1 1/2"	6 9/16"	12 5/8"
		4	D	12 5/8"	11	50	61	0.28"	8	0.19"	8	3.02"	10"	10"	12"	12"	12"	12"	1 5/8"	1 1/2"	6 9/16"	12 5/8"
		5	D	12 5/8"	11	50	61	0.28"	8	0.19"	8	3.02"	10"	10"	12"	12"	12"	12"	1 5/8"	1 1/2"	6 9/16"	12 5/8"
		6	D	12 5/8"	11	50	61	0.28"	8	0.19"	8	3.02"	10"	10"	12"	12"	12"	12"	1 5/8"	1 1/2"	6 9/16"	12 5/8"
		7	R-75	9 3/4"	11	50	61	0.28"	8	0.19"	8	3.02"	10"	10"	15"	12"	15"	12"	1 5/8"	1 1/2"	3 11/16"	9 3/4"
		8	R-75	9 3/4"	11	50	61	0.28"	8	0.19"	8	3.02"	10"	10"	15"	12"	15"	12"	1 5/8"	1 1/2"	3 11/16"	9 3/4"
		9	R-75	9 3/4"	11	50	61	0.28"	8	0.19"	8	3.02"	10"	10"	15"	12"	15"	12"	1 5/8"	1 1/2"	3 11/16"	9 3/4"
	EASTBOUND	10	R-75	9 3/4"	11	50	61	0.28"	8	0.19"	8	3.02"	10"	10"	15"	12"	15"	12"	1 5/8"	1 1/2"	3 11/16"	9 3/4"
		11	R-75	9 3/4"	11	50	61	0.28"	8	0.19"	8	3.02"	10"	10"	15"	12"	15"	12"	1 5/8"	1 1/2"	3 11/16"	9 3/4"
		12	R-75	9 3/4"	11	50	61	0.28"	8	0.19"	8	3.02"	10"	10"	15"	12"	15"	12"	1 5/8"	1 1/2"	3 11/16"	9 3/4"
		13	D	12 5/8"	11	50	61	0.28"	8	0.19"	8	3.02"	10"	10"	12"	12"	12"	12"	1 5/8"	1 1/2"	6 9/16"	12 5/8"
		14	D	12 5/8"	11	50	61	0.28"	8	0.19"	8	3.02"	10"	10"	12"	12"	12"	12"	1 5/8"	1 1/2"	6 9/16"	12 5/8"
		15	D	12 5/8"	11	50	61	0.28"	8	0.19"	8	3.02"	10"	10"	12"	12"	12"	12"	1 5/8"	1 1/2"	6 9/16"	12 5/8"
		16	D	12 5/8"	11	50	61	0.28"	8	0.19"	8	3.02"	10"	10"	12"	12"	12"	12"	1 5/8"	1 1/2"	6 9/16"	12 5/8"
		17	D	12 5/8"	11	50	61	0.28"	8	0.19"	8	3.02"	10"	10"	12"	12"	12"	12"	1 5/8"	1 1/2"	6 9/16"	12 5/8"
		18	R-75	9 3/4"	11	50	61	0.28"	8	0.19"	8	3.02"	10"	10"	15"	12"	15"	12"	1 5/8"	1 1/2"	3 11/16"	9 3/4"

DESIGN AGENCY: KS Associates Inc. 260 BURNS ROAD, ELYRIA, OHIO 44035

NO.	REVISIONS	BY	DATE
3	ADDENDUM 3	RAP	09/21
-	-	-	-
-	-	-	-

DESIGNED SS | CHECKED RY | DRAWN RAP | IN CHARGE HVH

BEARING DETAILS
OHIO TURNPIKE OVER STATE ROUTE 510
SANDUSKY COUNTY
MP 99.1

PROJECT 43-22-03
DATE: 9/28/2020

17 / 18

46 / 50

OHIO TURNPIKE AND INFRASTRUCTURE COMMISSION

MP99.1_SB001.dwg; 9/09/21 - 4:20pm