STRUCTURE NUMBER	MP 169.6			MP 172.9							ITEM		GRAND TOTAL	UNIT	DESCRIPTION	SEE SHEET NO.
SHEET NUMBER	4	10	12 - 13	4	29	30	31	32	40	52						
															ROADWAY	
	1			1							201		1	LUMP	CLEARING AND GRUBBING	
				1	3,467						202		3,467	SY	PAVEMENT REMOVED	
					459						202		459	FT	CONCRETE BARRIER REMOVED	
				2	483						202		483	FT	CURB AND GUTTER REMOVED	
					50						202		50	FT	CURB REMOVED	
			325	2	484						202		809	FT	GUARDRAIL REMOVED	
					1						202		1	EACH	ANCHOR ASSEMBLY REMOVED	
			4		2						202		6	EACH	BRIDGE TERMINAL ASSEMBLY REMOVED	
					138						202		138	FT	FENCE REMOVED	
						41					203		41	CY	EXCAVATION	
						1508					203		1508	CY	EMBANKMENT	
						203					203		203	CY	GRANULAR MATERIAL, TYPE B	
						496					SP 203		496	SY	SUBGRADE COMPACTION	
		1	400			3,393	2				204	2	3,793	SY	SUBGRADE COMPACTION	
				2							204		2	HOUR	PROOF ROLLING	
	325			2	488						606		813	FT	GUARDRAIL, TYPE MGS	
					63						606		63	FT	GUARDRAIL, TYPE MGS WITH LONG POSTS	
				2	263						606		263	FT	GUARDRAIL, TYPE MGS, USING LONG STEEL POSTS	
					1						606		1	EACH	ANCHOR ASSEMBLY, TYPE E	
			4		2						606		6	EACH	MGS BRIDGE TERMINAL ASSEMBLY, TYPE 1	
					138						607		138	FT	FENCE, TYPE 47	
					630						609		630	FT	COMBINATION CURB AND GUTTER, TYPE 2	
					8						609		8	FT	CURB, TYPE 4-A	
					21						609		21	FT	CURB, TYPE 4-C	
					208						609		208	FT	CURB, TYPE 6	
					202						622		202	FT	CONCRETE BARRIER, TYPE B-50, AS PER PLAN (OTIC CBR-1 & CBR-2)	
						202					SP625		202	FT	CONDUIT, 4" WITH 3-CELL INNERDUCT (WB LANES)	
					1	202					SP625		202	FT	CONDUIT, 4" WITH 4-CELL INNERDUCT (EB LANES)	
						10					SP627		10	CY	STONE SHOULDER PROTECTION (T=3")(WITH GUARDRAIL)	
					2										**EROSION CONTROL**	
											SP 113		1	LUMP	SWP3 MANAGEMENT	
				4							601		4	SY	TIED CONCRETE BLOCK MAT, TYPE 1	
			26								601		26	SY	TIED CONCRETE BLOCK MAT, TYPE 2	
				2							659		2	EACH	SOIL ANALYSIS TEST	
				161							659		161	CY	TOPSOIL	
				1,450							659		1,450	SY	SEEDING AND MULCHING, CLASS 1	
				73							659		73	SY	REPAIR SEEDING AND MULCHING	
				73							659		73	SY	INTER-SEEDING	
				0.2							659		0.2	TON	COMMERCIAL FERTILIZER	
				0.3							659		0.3	ACRE	LIME	
				8							659		8	MGAL	WATER	
				3.3							659		3.3	MSF	MOWING	
											832		1	LUMP	EROSION CONTROL	
															DRAINAGE	
				100							605		100	FT	6" UNCLASSIFIED PIPE UNDERDRAINS	
					831						605		831	FT	6" BASE PIPE UNDERDRAINS	
				100							605		100	FT	AGGREGATE DRAINS	
				100							611		100	FT	6" CONDUIT, TYPE F	
				2							611		2	EACH	PRECAST REINFORCED CONCRETE OUTLET	
					5						611		5	EACH	CATCH BASIN ADJUSTED TO GRADE	
					1						611		1	EACH	MANHOLE ADJUSTED TO GRADE	
															PAVEMENT	
			173			1,059					254		1,232	SY	PAVEMENT PLANING, ASPHALT CONCRETE (DEPTH VARIES)	
						641					254		641	SY	PAVEMENT PLANING, PORTLAND CEMENT CONCRETE (DEPTH VARIES)	
						447					301		447	CY	ASPHALT CONCRETE BASE, PG64-22	
						106					SP302		106	CY	BITUMINOUS AGGREGATE BASE COURSE, PG64-22	
		1	16	2		679	2				SP304	2	695	CY	AGGREGATE BASE	
						40					SP402		40	CY	ASPHALT CONCRETE BASE COURSE OR RECYCLED ASPHALT CONCRETE BASE COURSE, PG64-22	
						13					SP404		13	CY	ASPHALT CONCRETE SURFACE COURSE, USING CRUSHED SLAG, PG64-22	
	27					657					407		684	GAL	TACK COAT	
					1	153					SP408		153	GAL	PRIME COAT	
			8			152					441		160	CY	ASPHALT CONCRETE SURFACE COURSE, TYPE 1, (448), PG64-22	
			9			213					441		222	CY	ASPHALT CONCRETE INTERMEDIATE COURSE, TYPE 2, (448)	
						112					452		112	SY	8" NON-REINFORCED CONCRETE PAVEMENT, CLASS QC 1P	
						235					452		235	SY	9" NON-REINFORCED CONCRETE PAVEMENT, CLASS QC 1P	

NO.	REVISIONS	BY	DATE
1	ADDENDUM NO. 1	SS	11/21
2	ADDENDUM NO. 3	SS	12/21
-	-	-	-

DESIGNED SS | DRAWN SS | CHECKED GAH | IN CHARGE NFF

DESIGN AGENCY: Tran Systems

OHIO TURNPIKE

GENERAL SUMMARY

EAST EDGERTON AND STATE ROUTE 21 OVER OHIO TURNPIKE

M.P. 169.6 AND M.P. 172.9 CUYAHOGA AND SUMMIT COUNTY

PROJECT 43-22-05

DATE: 02/25/2021

OHIO TURNPIKE AND INFRASTRUCTURE COMMISSION

GG001.dwg; 12/03/21 - 10:54am

FOR TYPICAL SECTION LEGEND, SEE SHEET 27.

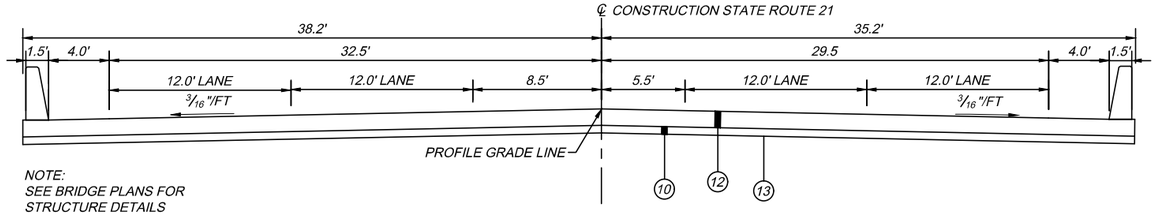

NOTE:
SEE BRIDGE PLANS FOR
STRUCTURE DETAILS

PROPOSED APPROACH SLAB NORMAL SECTION

STA 8+76.87 TO STA 8+96.87
AND
STA 11+11.67 TO STA 11+31.67

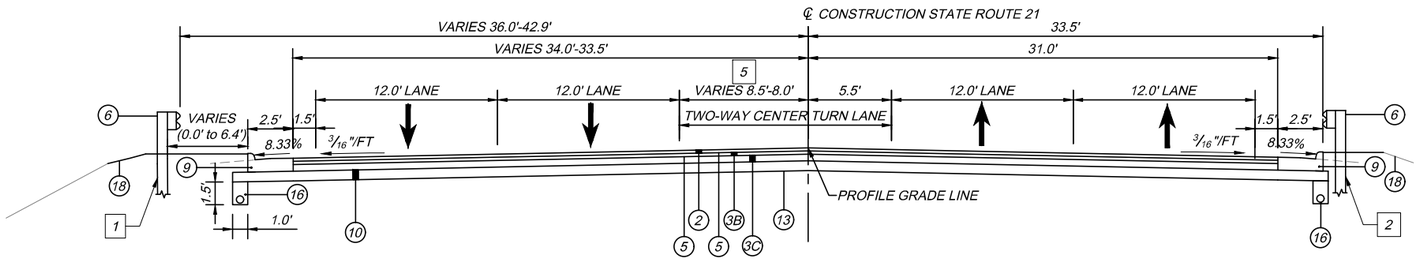

1 STA 11+63.63 TO STA 13+25.68

2 STA 11+49.70 TO STA 11+76.92

PROPOSED FULL DEPTH NORMAL SECTION

STA 11+33.67 TO STA 13+50.00

5 STA 13+21.58 TO STA 13+50

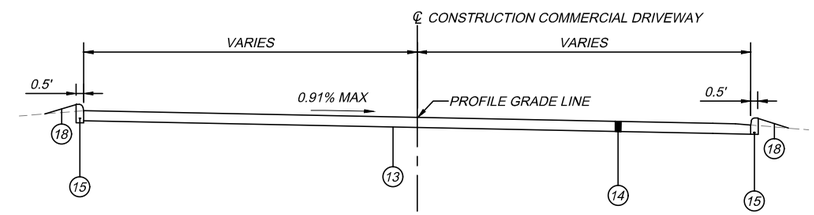

PROPOSED DRIVEWAY NORMAL SECTION

STA 11+87.09, RT
STA 12+89.63, RT

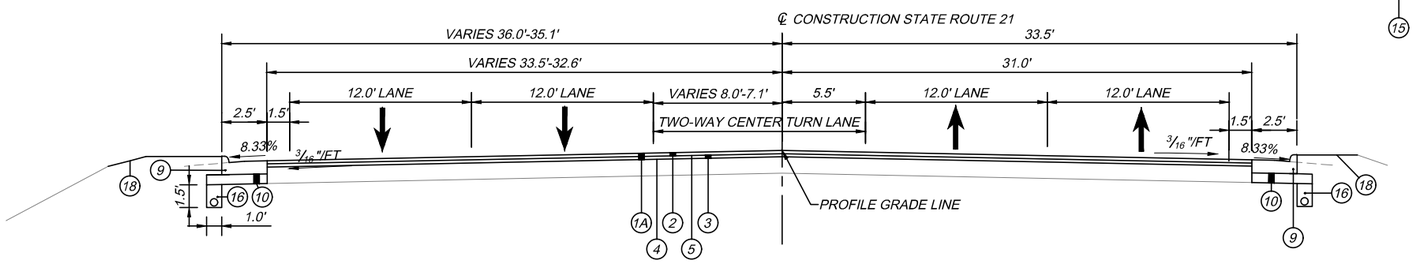

PROPOSED RESURFACING NORMAL SECTION

STA 13+50.00 TO STA 14+20.00

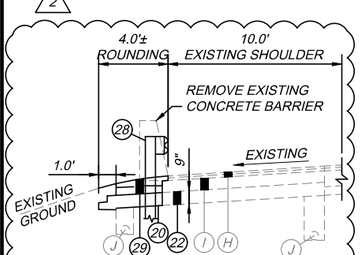

OUTSIDE SHOULDER SECTION - OHIO TURNPIKE

STA 38+80.38 TO STA . 40+11.57, LT = 131.19 L.F.
STA 39+7.87 TO STA . 40+32.87, RT = 125.00 L.F.

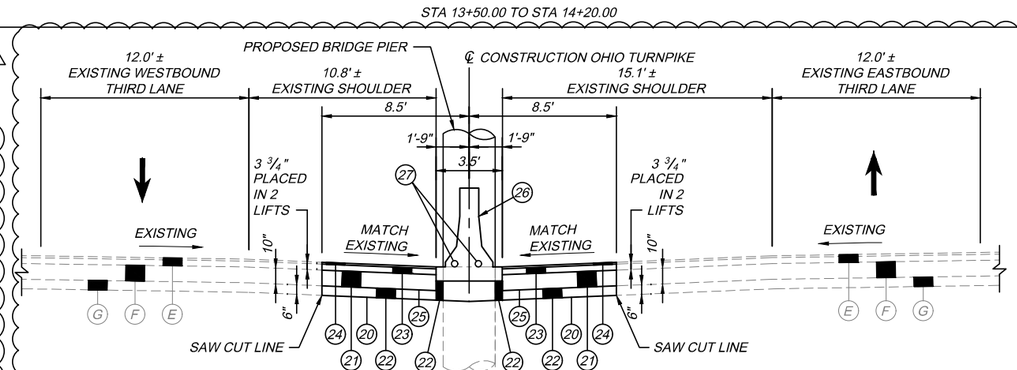

PROPOSED NORMAL SECTION - OHIO TURNPIKE

STA 38+62.39 TO STA . 40+64.39 = 202.00 L.F.

EXISTING TURNPIKE LEGEND:

- (E) 5" ± EXISTING ASPHALT CONCRETE
- (F) 10" ± EXISTING REINFORCED CONCRETE PAVEMENT
- (G) 6" ± EXISTING AGGREGATE BASE
- (H) 3" ± EXISTING ASPHALT CONCRETE
- (I) 8" ± EXISTING ASPHALT CONCRETE
- (J) 6" UNDERDRAIN

PROPOSED TURNPIKE LEGEND:

- (20) ITEM SP203 - SUBGRADE COMPACTION
- (21) ITEM SP302 - BITUMINOUS AGGREGATE BASE COURSE, PG64-22; (DIMENSION AS SHOWN)
- (22) ITEM SP304 - AGGREGATE BASE; (DIMENSION AS SHOWN)
- (23) ITEM SP402 - ASPHALT CONCRETE BASE COURSE OR RECYCLED ASPHALT CONCRETE BASE COURSE, PG64-22 (DIMENSION AS SHOWN)
- (24) ITEM SP404 - 1 1/4" ASPHALT CONCRETE SURFACE COURSE, USING CRUSHED SLAG, PG64-22
- (25) ITEM SP408 - PRIME COAT; (APPLICATION RATE 0.4 GAL/SY)
- (26) ITEM 622 - CONCRETE BARRIER, TYPE B-50, AS PER PLAN
- (27) ITEM SP625 - CONDUIT, 4" WITH 3-CELL INNERDUCT (WB LANES), OR ITEM SP625 - CONDUIT, 4" WITH 4-CELL INNERDUCT (EB LANES)

NOTES:
1. SEE SHEET 42 FOR CONCRETE BARRIER TRANSITIONS AT BRIDGE PIERS AND PAVEMENT REMOVAL AREAS.
2. AN INTERMEDIATE TACK COAT SHALL BE APPLIED BETWEEN ALL LIFTS AND COURSES OF SP402 AND SP404.
3. PAVEMENT BUILDUP INFORMATION ON THE OHIO TURNPIKE OBTAINED FROM EXISTING OTIC PLANS CONTRACT 77-11-04, PROJECTS 39-18-02A AND 59-22-04A.

2

- (28) ITEM 606 - GUARDRAIL, TYPE MGS, USING LONG STEEL POSTS
- (29) ITEM SP627 - STONE SHOULDER PROTECTION (T=3") (WITH GUARDRAIL)
  ITEM SP304 - COMPACTED AGGREGATE, (VAR. THICKNESS) (WITHOUT GUARDRAIL)

NO.	REVISIONS	BY	DATE
1	ADDENDUM NO. 1	SS	11/21
2	ADDENDUM NO. 3	SS	12/21
-	-	-	-

DESIGNED SS
DRAWN SS
CHECKED GAH
IN CHARGE NFF

DESIGN AGENCY: Tran Systems

TYPICAL SECTIONS
STATE ROUTE 21 OVER OHIO TURNPIKE
SUMMIT COUNTY
M.P. 172.9

PROJECT 43-22-05
DATE: 02/25/2021

28
76

OHIO TURNPIKE AND INFRASTRUCTURE COMMISSION

GY003.dwg: 12/03/21 - 10:54am

SHEET NO.	REFERENCE NO.	ALIGNMENT	STATION FROM	STATION TO	SIDE	202 PAVEMENT REMOVED SY	202 CONCRETE BARRIER REMOVED FT	202 CURB AND GUTTER REMOVED FT	202 CURB REMOVED FT	202 GUARDRAIL REMOVED FT	202 ANCHOR ASSEMBLY REMOVED FT	202 BRIDGE TERMINAL ASSEMBLY REMOVED EACH	202 FENCE REMOVED FT	605 6" BASE PIPE UNDERDRAINS FT	606 GUARDRAIL, TYPE MGS FT	606 GUARDRAIL, TYPE MGS WITH LONG POSTS FT	606 GUARDRAIL, TYPE MGS, USING LONG STEEL POSTS FT	606 ANCHOR ASSEMBLY, MGS TYPE E EACH	606 MGS BRIDGE TERMINAL ASSEMBLY, TYPE 1 EACH	607 FENCE, TYPE 47 FT	609 COMBINATION CURB AND GUTTER, TYPE 2 FT	609 CURB, TYPE 4-A FT	609 CURB, TYPE 4-C FT	609 CURB, TYPE 6 FT	611 CATCH BASIN ADJUSTED TO GRADE EACH	611 MANHOLE ADJUSTED TO GRADE EACH	622 CONCRETE BARRIER, TYPE B-50, AS PER PLAN (OTIC CBR-1 & CBR-2) EACH
41	U-1	S.R. 21	7+50.00	8+76.87	LT/RT									254													
41	D-1	S.R. 21	6+94.00		RT																				1		
41	D-2	S.R. 21	7+31.12		LT																					1	
42	R-4	S.R. 21	7+50.00	8+60.39	LT	142																					
42	R-5	S.R. 21	7+50.00	8+76.87	LT/RT	946																					
42	R-6	S.R. 21	7+50.00	8+46.52	RT	93																					
42	R-7	S.R. 21	7+65.28	8+60.39	LT	43																					
42	R-8	S.R. 21	7+64.97	8+28.62	LT					64																	
42	G-1	S.R. 21	7+65.28	8+60.39	LT										125												
42	C-1	S.R. 21	7+50.00	8+60.39	LT																			111			
42	G-2	S.R. 21	7+64.97	8+46.52	RT										100												
42	C-2	S.R. 21	7+50.00	8+46.52	RT																			97			
42	BTA-1	S.R. 21	8+46.52	8+67.33	RT							1			50				1				21				
42	C-3	S.R. 21	8+67.33	8+69.33	RT																	2					
42	C-4	S.R. 21	8+83.06	8+85.06	LT																	2					
42	F-1	S.R. 21	8+35.90	8+86.28	RT								51							51							
42	F-2	S.R. 21	8+78.80	9+07.02	LT								29							29							
42	G-4	S.R. 21	11+24.91	11+76.40	RT											63					52						
42	C-6	S.R. 21	11+24.91	11+26.91	RT																	2					
42	U-2	S.R. 21	11+31.70	14+20.00	LT/RT									577													
42	C-8	S.R. 21	11+24.91	14+20.00	RT																296						
42	R-12	S.R. 21	11+24.91	13+50.00	RT			226																			
42	R-13	COMM. DRIVEWAY	11+87.09		RT	45																					
42	BTA-4	S.R. 21	11+38.99	11+63.57	LT							1			25				1		25						
42	C-5	S.R. 21	11+38.99	11+40.99	LT																	2					
42-43	G-3	S.R. 21	11+63.57	13+25.68	LT										188			1									
42	F-3	S.R. 21	11+02.98	11+39.70	RT								37							37							
42	F-4	S.R. 21	11+23.25	11+43.60	LT								21							21							
42-43	R-9	S.R. 21	11+63.57	13+25.68	LT					163	1																
42	R-14	OHIO TURNPIKE	39+07.87	40+32.87	RT	1	125		25	125							125										
42	R-15	OHIO TURNPIKE	38+62.39	40+64.39	C/L	382	202	2			2																202
42	R-16	OHIO TURNPIKE	38+80.38	40+11.57	LT		132		25	132							138										
42-43	R-10	S.R. 21	11+63.57	14+00.00	LT	54																					
42-43	C-7	S.R. 21	11+63.57	14+20.00	LT			257													257						
42-43	R-11	S.R. 21	11+63.57	13+50.00	LT/RT	1735																					
43	D-5	S.R. 21	12+69.24		RT																				1		
43	D-6	S.R. 21	12+69.21		LT																				1		
43	D-7	S.R. 21	13+59.71		LT																				1		
43	D-8	S.R. 21	13+59.44		RT																				1		
43	R-17	COMM. DRIVEWAY	12+89.63		RT	27																					
TOTALS CARRIED TO GENERAL SUMMARY						3,467	459	483	50	484	1	2	138	831	488	63	263	1	2	138	630	8	21	208	5	1	202
						1	2		2	2					2		2										

DESIGN AGENCY: Tran Systems

NO.	REVISIONS	BY	DATE
1	ADDENDUM NO. 1	SS	11/21
2	ADDENDUM NO. 3	SS	12/21
-	-	-	-

DESIGNED SS | DRAWN SS | CHECKED GAH | IN CHARGE NFF

ROADWAY ESTIMATED QUANTITIES
STATE ROUTE 21 OVER OHIO TURNPIKE
SUMMIT COUNTY
M.P. 172.9

PROJECT 43-22-05
DATE: 02/25/2021

OHIO TURNPIKE AND INFRASTRUCTURE COMMISSION

GQ001.dwg; 12/03/21 - 10:55am

PAVEMENT AREA (REF NO.)	STATION FROM	STATION TO	SIDE	LENGTH (ALONG CURB OR EDGE LINE)	AREA (FROM CADD)	204 SUBGRADE COMPACTION	204 PROOF ROLLING	254 PAVEMENT PLANING, ASPHALT CONCRETE	254 PAVEMENT PLANING, PORTLAND CEMENT CONCRETE		301 6" ASPHALT CONCRETE BASE, PG64-22	SP304 6" AGGREGATE BASE	452 9" NON-REINFORCED CONCRETE PAVEMENT, CLASS QC 1P		407 TACK COAT (@0.09 GAL/SY)	407 TACK COAT (@0.06 GAL/SY)		441 1 1/4" AC SURFACE COURSE, TYPE 1, (448), PG64-22	441 1 3/4" AC INTERMEDIATE COURSE, TYPE 2, (448), PG64-22		452 8" NON-REINFORCED CONCRETE PAVEMENT, CLASS QC 1P	
	FROM	TO		FOOT	SQ FT	SY	HR	SY	SY		CY	CY	SY		GAL	GAL		CY	CY		SY	
	S.R. 21																					
PLANING & RESURF. CONC. (R-1)	6+80.00	7+50.00	LT		3018				335						30	20		12	16			
PLANING & RESURF. CONC. (R-3)	6+80.00	7+50.00	RT		2743				305						27	18		11	15			
PLANING & RESURF. ASPH. (R-2)	6+80.00	7+50.00	LT/RT		4618			513							46	31		18	25			
FULL DEPTH CONC. (R-4)	7+50.00	8+60.39	LT		1276	142						26	142									
FULL DEPTH ASPH. (R-5)	7+50.00	8+76.87	LT/RT		8514	946	0.5				158	162			85	57		33	46			
FULL DEPTH CONC. (R-6)	7+50.00	8+46.52	RT		836	93						17	93									
FULL DEPTH ASPH. (R-11)	11+31.67	13+50.00	LT/RT		15614	1735	1				289	297			156	104		60	84			
CURB AND GUTTER TYPE 2 (C-7)	11+63.57	12+62.25	LT	99								4										
CURB AND GUTTER TYPE 2 (C-8)	11+24.91	13+50.00	RT	226								9										
PLANING & RESURF. (R-18)	13+50.00	14+20.00	LT/RT		4911			546							49	33		19	27			
CURB AND GUTTER TYPE 2	13+50.00	14+20.00	LT/RT	140	490	54						9	2									
APPROACH SLABS	8+76.87	11+31.67	LT/RT		2800	311						52										
CONC DRIVE APRON (R-13)	11+87.09		RT		620	69						11									69	
CONC DRIVE APRON (R-17)	12+89.63		RT		391	43						7									43	
SUBTOTAL THIS SHEET						3,393	1.5	1,059	640		447	596	235		394	263		152	213		112	
TOTALS CARRIED TO GENERAL SUMMARY						3,393	2	1,059	641		447	596	235		657			152	213		112	

2 2

PAVEMENT AREA (REF NO.)	STATION FROM	STATION TO	SIDE	LENGTH (ALONG CURB OR EDGE LINE)	AREA (FROM CADD)		SP203 SUBGRADE COMPACTION		SP302 10" BITUMINOUS AGGREGATE BASE COURSE, PG64-22	SP304 6" AGGREGATE BASE		SP404 1 1/4" ASPHALT CONCRETE SURFACE COURSE, USING CRUSHED SLAG, PG64-22	SP402 3 3/4" ASPHALT CONCRETE BASE COURSE OR RECYCLED ASPHALT CONCRETE BASE COURSE, PG64-22	SP408 PRIME COAT (@0.4 GAL/SY)	SP625 CONDUIT, 4" WITH 3-CELL INNERDUCT (WB LANES)	SP625 CONDUIT, 4" WITH 4-CELL INNERDUCT (EB LANES)	SP627 STONE SHOULDER PROTECTION (T=3") (WITH GUARDRAIL)
	FROM	TO		FOOT	SQ FT		SY		CY	CY		CY	CY	GAL	FT	FT	CY
	OHIO TURNPIKE																
FULL DEPTH ASPH. (R-15)	38+62.39	40+64.39	LT/RT	202	3434		382		106	64		13	40	153	202	202	
OUTSIDE SHOULDER (R-16)	38+80.38	40+11.57	LT	132	528		59			10							5
OUTSIDE SHOULDER (R-14)	39+07.87	40+32.87	RT	125	500		56			9							5
SUBTOTAL THIS SHEET							496		106	83		13	40	153	202	202	10
TOTALS CARRIED TO GENERAL SUMMARY							496		106	83		13	40	153	202	202	10

1 2 2 2 2 2

SHEET.	STATION FROM	STATION TO	203 EXCAVATION	203 EMBANKMENT	659 SEEDING AND MULCHING, CLASS 1	203 GRANULAR MATERIAL, TYPE B *
	S.R. 21 (BRECKSVILLE RD.)		CY	CY	SY	CY
45	7+50.00	8+50.00	0	359	321	
46	8+76.87	11+31.67	17	454	275	
47	11+50.00	12+50.00	24	534	527	
48	13+00.00	14+00.00	0	161	327	
TOTAL CARRIED TO GENERAL SUMMARY			41	1508	1450	203

* ITEM 203 GRANULAR MATERIAL, TYPE B QUANTITY IS FOR THE EMBANKMENT BEHIND ABUTMENTS (133 CY) AND BELOW THE APPROACH SLABS (70 CY).

DESIGN AGENCY: TranSystems

NO.	REVISIONS	BY	DATE
1	ADDENDUM NO. 1	SS	11/21
2	ADDENDUM NO. 3	SS	12/21
-	-		-

DESIGNED SS | CHECKED GAH | DRAWN SS | IN CHARGE NFF

ROADWAY ESTIMATED QUANTITIES
STATE ROUTE 21 OVER OHIO TURNPIKE
SUMMIT COUNTY
M.P. 172.9

PROJECT 43-22-05
DATE: 02/25/2021

OHIO TURNPIKE AND INFRASTRUCTURE COMMISSION

GQ001.dwg; 12/03/21 - 10:55am