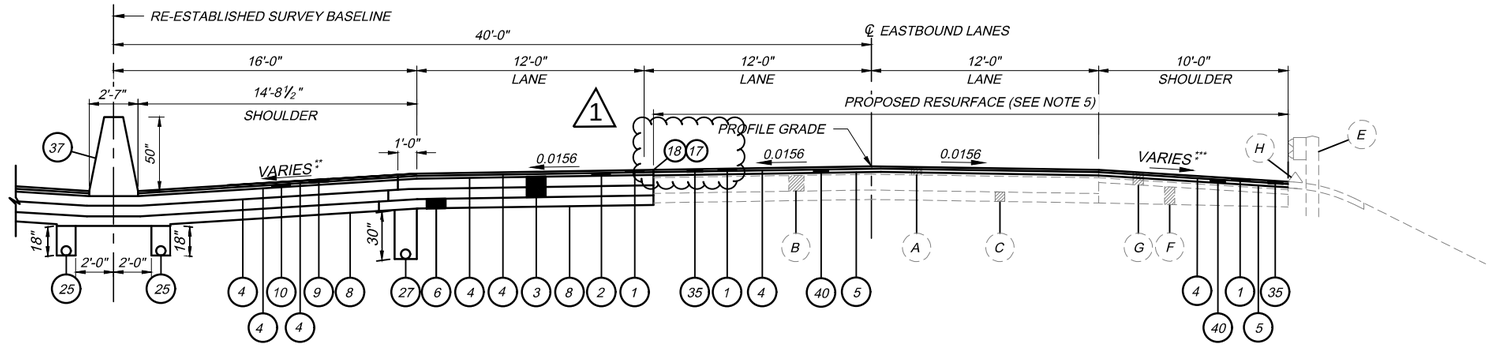

RESURFACING SECTION

EASTBOUND SHOWN. WESTBOUND SYMMETRICAL ABOUT RE-ESTABLISHED SURVEY BASELINE

WESTBOUND

STA 955+90.00 TO STA 956+40.00 (40' LT) = 50 L.F.
STA 966+20.00 TO STA 966+70.00 (40' LT) = 50 L.F.

EASTBOUND

STA 955+90.00 TO STA 956+40.00 (40' RT) = 50 L.F.
STA 966+20.00 TO STA 966+70.00 (40' RT) = 50 L.F.

* SLOPE VARIES. SEE PAVEMENT ELEVATION TABLE ON SHEETS 70-73 FOR SLOPES. (7% MAXIMUM ROLLOVER FOR SHOULDERS.

** VARIES
0.040 TO 0.0156 - STA 952+84.02 TO STA 953+84.02 LT/RT
0.0156 TO 0.040 - STA 955+40.89 TO STA 956+40.89 LT/RT
0.040 TO 0.0156 - STA 966+20.70 TO STA 967+20.70 LT/RT

*** VARIES
0.040 TO 0.0156 - STA 952+82.40 TO STA 953+82.40 RT
0.0156 TO 0.040 - STA 955+39.26 TO STA 956+39.26 RT
0.040 TO 0.0156 - STA 966+19.05 TO STA 967+19.05 RT

0.040 TO 0.0156 - STA 952+85.64 TO STA 953+85.64 LT
0.0156 TO 0.040 - STA 955+42.51 TO STA 956+42.51 LT
0.040 TO 0.0156 - STA 966+22.34 TO STA 967+22.34 LT

**** VARIES
MATCH EXISTING TO 0.0156 - STA 952+80.00 TO STA 953+30.00 LT/RT

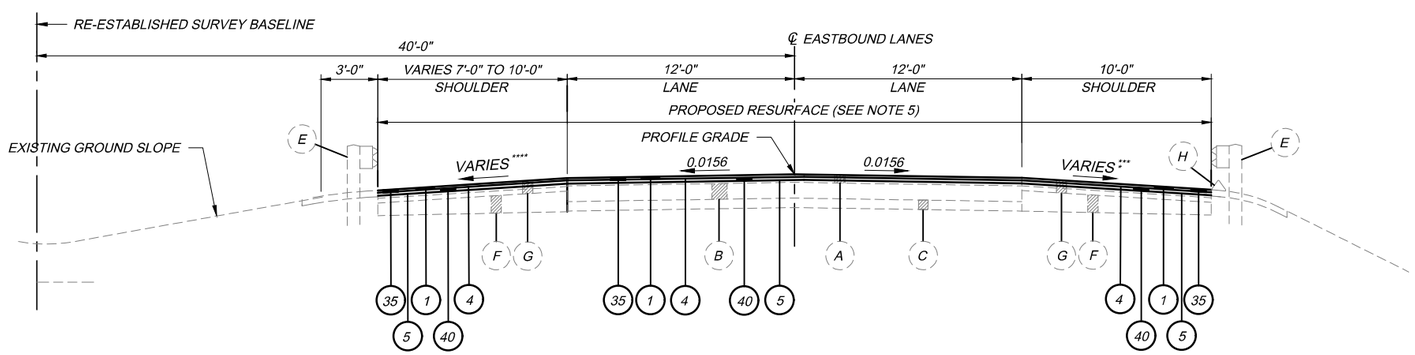

RESURFACING SECTION

EASTBOUND SHOWN. WESTBOUND SYMMETRICAL ABOUT RE-ESTABLISHED SURVEY BASELINE

WESTBOUND

STA 952+80.00 TO STA 953+30.00 (40' LT) = 50 L.F.

EASTBOUND

STA 952+80.00 TO STA 953+30.00 (40' RT) = 50 L.F.

NOTES:

FOR ADDITIONAL NOTES, EXISTING AND PROPOSED LEGENDS, SEE SHEET 3.

DESIGN AGENCY
DGL CONSULTING ENGINEERS, LLC
3455 BRIARFIELD BLVD, SUITE E
MAUMEE, OH 43537

NO.	REVISIONS	BY	DATE
1	ADDENDUM NO. 2	SRC	12/27
-	-	-	-
-	-	-	-

DESIGNED	CHECKED
BWP	RJM
DRAWN	IN CHARGE
BWP	AEH

TYPICAL SECTIONS

PROJECT 43-22-02
DATE: 11/20/20

OHIO TURNPIKE AND INFRASTRUCTURE COMMISSION

19172_Typical Sections.dwg: 12/27/21 - 10:42am

SHEET NUMBER 10	11	12	13	14	15	20	33	34	35	36	37	38	39	42	77	ITEM	GRAND TOTAL	UNIT	DESCRIPTION	SEE SHEET NUMBER
																			DRAINAGE	
										12						601	12	SY	TIED CONCRETE BLOCK MAT, TYPE 1	
										3						601	3	CY	ROCK CHANNEL PROTECTION, TYPE C WITH GEOTEXTILE FABRIC	
										447						611	447	FT	6" CONDUIT, TYPE F FOR UNDERDRAIN OUTLETS	
										2,792						SP 605	2,792	FT	6" BASE PIPE UNDERDRAIN, WITH FABRIC WRAP (18")	
										2,788						SP 605	2,788	FT	6" SHALLOW PIPE UNDERDRAIN, WITH FABRIC WRAP (30")	
										176						SP 605	176	FT	6" UNCLASSIFIED PIPE UNDERDRAIN WITH FABRIC WRAP	
										91						611	91	FT	12" CONDUIT, TYPE F	
										30						611	30	FT	18" CONDUIT, TYPE B	
										2						SP 611	2	EACH	CATCH BASIN, NO. CB-1	
										2						SP 611	2	EACH	INLET, NO. I-3B50, DOUBLE GRATE	
										3						611	3	EACH	CATCH BASIN ADJUSTED TO GRADE	
										6						611	6	EACH	PRECAST REINFORCED CONCRETE OUTLET	
										2						SPECIAL	2	EACH	PRECAST CONCRETE END SECTION - 12"	
																			PAVEMENT	
13,571																206	13,571	SY	CEMENT STABILIZED SUBGRADE, 16 INCHES DEEP, AS PER PLAN	9
													523			209	523	FT	LINEAR GRADING, AS PER PLAN	10
											2472					252	2472	FT	FULL DEPTH PAVEMENT SAWING	
	85															253	85	SY	PAVEMENT REPAIR, AS PER PLAN	11
											1,209					254	1,209	SY	PAVEMENT PLANING, ASPHALT CONCRETE	
											3,200					SP 302	3,200	CY	ASPHALT CONCRETE BASE, PG64-22	
											1,891					SP 304	1,891	CY	AGGREGATE BASE	
											214					SP 402	214	CY	ASPHALT CONCRETE INTERMEDIATE COURSE OR RECYCLED ASPHALT CONCRETE INTERMEDIATE COURSE, PG 64-22	
											258					SP 402	258	CY	ASPHALT CONCRETE INTERMEDIATE COURSE OR RECYCLED ASPHALT CONCRETE INTERMEDIATE COURSE, PG 76-22 (FR)	
												181				SP 404	181	CY	ASPHALT CONCRETE SURFACE COURSE, USING CRUSHED STONE, PG 64-22	
												257				SP 404	257	CY	ASPHALT CONCRETE SURFACE COURSE, USING CRUSHED SLAG, PG76-22 (FR)	
												2472				SP 404A	2472	FT	JOINT SEALER (APPLIED TO VERTICAL FACE, SP 402 AND SP 404)	
												1,849				407	1,849	GAL	NON-TRACKING TACK COAT	
													403			609	403	FT	ASPHALT CONCRETE CURB, TYPE 1, PG 64-22	
												24				SP 627	24	CY	STONE SHOULDER PROTECTION	
																			M.P. 40.3 MAINLINE STRUCTURE OVER S.R. 109	
																			REFER TO SHEET 83 FOR ITEMS AND QUANTITIES	
																			M.P. 40.5 MAINLINE STRUCTURE OVER INDIANA AND OHIO RAILWAY	
																			REFER TO SHEET 83 FOR ITEMS AND QUANTITIES	

DESIGN AGENCY
DGL CONSULTING ENGINEERS, LLC
3455 BRIARFIELD BLVD, SUITE E
MAUMEE, OH 43537

NO.	REVISIONS	BY	DATE
1	ADDENDUM NO. 1	AC	12/20
2	ADDENDUM NO. 2	SRC	12/27
-	-	-	-

CHECKED RJM
IN CHARGE AEH
DESIGNED ADC
DRAWN ADC

GENERAL SUMMARY

PROJECT 43-22-02
DATE: 11/20/20

OHIO TURNPIKE AND INFRASTRUCTURE COMMISSION

19172_GEN_SUM.dwg; 12/28/21 - 9:46am

STATION TO STATION			SIDE	LENGTH	AVERAGE WIDTH RESURFACE (W1)	AVERAGE WIDTH FULL DEPTH (W2)	SURFACE AREA (A1) RESURFACE A=DxW/9	SURFACE AREA (A2) FULL DEPTH A=DxW/9	AREA BY COMPUTER	202 PAVEMENT REMOVED, AS PER PLAN		206 CEMENT STABILIZED SUBGRADE, 16 INCHES DEEP, AS PER PLAN	252 FULL DEPTH PAVEMENT SAWING	254 PAVEMENT PLANING, ASPHALT CONCRETE (T=2")	SP 302 ASPHALT CONCRETE BASE, PG64-22 (T=12")	SP 302 ASPHALT CONCRETE BASE, PG64-22 (SHOULDER) (T=8")	SP 304 AGGREGATE BASE (T=6")	SP 304 AGGREGATE BASE (T=9-1/4")	SP 304 AGGREGATE BASE (SHOULDER) (T=10")	SP 402 ASPHALT CONCRETE INTERMEDIATE COURSE OR RECYCLED ASPHALT CONCRETE INTERMEDIATE COURSE, PG 64-22 (T=1-3/4")	SP 402 ASPHALT CONCRETE INTERMEDIATE COURSE OR RECYCLED ASPHALT CONCRETE INTERMEDIATE COURSE, PG 76-22 (FR) (T=1-3/4")	SP 402 ASPHALT CONCRETE INTERMEDIATE COURSE OR RECYCLED ASPHALT CONCRETE INTERMEDIATE COURSE, PG 79-22 (FR) (VARIABLE DEPTH)		
				FT	FT	FT	SY	SY	SF	SY		SY	FT	SY	CY	CY	CY	CY	CY	CY	CY	CY			
RESURFACING																									
952+80.00	TO	953+30.00	EB	50.00	40.50		225.00							225								3			
952+80.00	TO	953+30.00	WB	50.00	43.25		240.28							240								3			
RESURFACING AND FULL DEPTH																									
955+90.00	TO	956+40.00	EB	50.00	33.50	28.50	186.11	158.33				158	50	186	53		26			4	4	3			
955+90.00	TO	956+40.00	WB	50.00	33.50	28.50	186.11	158.33				158	50	186	53		26			4	4	3			
966+20.00	TO	966+70.00	EB	50.00	33.50	28.50	186.11	158.33				158	50	186	53		26			4	4	3			
966+20.00	TO	966+70.00	WB	50.00	33.50	28.50	186.11	158.33				158	50	186	53		26			4	4	3			
NORMAL SECTION																									
956+40.00	TO	966+20.00	EB	980.00		28.50		3,103.33				3,103	980		1,034		517			73	72				
956+40.00	TO	966+20.00	WB	980.00		28.50		3,103.33				3,103	980		1,034		517			73	72				
NORMAL FULL WIDTH																									
953+30.00	TO	953+82.97	EB	52.97		53.00		311.93				372	44		105	13	53		16	7	11				
953+30.00	TO	953+85.06	WB	55.06		53.00		324.24				387	44		110	13	55		17	7	11				
955+39.84	TO	955+90.00	EB	50.16		53.00		295.39				353	34		100	12	50		15	6	10				
955+41.94	TO	955+90.00	WB	48.06		53.00		283.02				338	34		96	12	48		15	6	10				
966+70.00	TO	967+19.63	EB	49.63		53.00		292.27				349	34		99	12	50		15	6	10				
966+70.00	TO	967+21.75	WB	51.75		53.00		304.75				364	34		103	13	52		16	7	11				
SUPERELEVATED FULL WIDTH																									
968+76.99	TO	969+30.00	EB	53.01		53.00		312.17				373	44		106	13	53		16	7	11				
968+79.15	TO	969+30.00	WB	50.85		53.00		299.45				357	44		101	12	51		15	6	10				
NORMAL APPROACH SLAB																									
953+82.97	TO	953+97.98	EB	15.01		62.50		104.24				105						27							
953+85.06	TO	954+00.07	WB	15.01		62.50		104.24	563.32			105						27							
955+24.83	TO	955+39.84	EB	15.01		62.50		104.24				105						27							
955+26.93	TO	955+41.94	WB	15.01		62.50		104.24	579.96			105						27							
967+19.63	TO	967+34.64	EB	15.01		62.50		104.24	596.50			105						27							
967+21.75	TO	967+36.76	WB	15.01		62.50		104.24				105						27							
SUPERELEVATED APPROACH SLAB																									
968+61.98	TO	968+76.99	EB	15.01		62.50		104.24	576.80			105						27							
968+64.14	TO	968+79.15	WB	15.01		62.50		104.24				105						27							
ENTIRE PROJECT LENGTH																									
953+30.00	TO	969+30.00	EB/WB	1,600.00					38,687.00	4,299															
									SUBTOTALS	4,299		10,571	2472	1,209	3,100	100	1,550	216	125	214	240	18			
TOTALS CARRIED TO GENERAL SUMMARY (* TOTALS CARRIED TO GENERAL NOTES)										4,299		10,571*	2472	1,209	3,200			1,891		214	258				

1

2

19172_Subsummary_Pavement.dwg: 12/27/21 - 10:52am

DESIGN AGENCY
DGL CONSULTING ENGINEERS, LLC
3455 BRIARFIELD BLVD. SUITE E
MAUMEE, OH 43537

NO.	REVISIONS	BY	DATE
1	ADDENDUM NO. 1	AC	12/20
2	ADDENDUM NO. 2	SRC	12/27
-	-	-	-

DESIGNED	CHECKED	DRAWN	IN CHARGE
ADC	RJM	ADC	AEH

PAVEMENT SUBSUMMARY

PROJECT 43-22-02
DATE: 11/20/20

OHIO TURNPIKE AND INFRASTRUCTURE COMMISSION

STATION TO STATION			SIDE	LENGTH	AVERAGE WIDTH RESURFACE (W1)	AVERAGE WIDTH FULL DEPTH (W2)	SURFACE AREA (A1) RESURFACE A=DxW/9	SURFACE AREA (A2) FULL DEPTH A=DxW/9	AREA BY COMPUTER	SP 404 ASPHALT CONCRETE SURFACE COURSE, USING CRUSHED STONE, PG 64-22 (T=1-1/2")	SP 404 ASPHALT CONCRETE SURFACE COURSE, USING CRUSHED SLAG, PG 76-22 (FR) (T=1-1/2")	SP 404 ASPHALT CONCRETE SURFACE COURSE, USING CRUSHED SLAG, PG 76-22 (FR) (T=1-1/2")	SP 404A JOINT SEALER (APPLIED TO VERTICAL FACE, SP 402 AND SP 404)	407 NON-TRACKING TACK COAT (APP. @ 0.06 GAL/SY)	407 NON-TRACKING TACK COAT (APP. @ 0.06 GAL/SY)	407 NON-TRACKING TACK COAT (APP. @ 0.085 GAL/SY)	407 NON-TRACKING TACK COAT (APP. @ 0.06 GAL/SY)		SP 627 STONE SHOULDER PROTECTION (T=3")		
				FT	FT	FT	SY	SY	SF	CY	CY	CY	FT	GAL	GAL	GAL	GAL		CY		
RESURFACING																					
952+80.00	TO	953+30.00	EB	50.00	40.50		225.00				9			14		19					
952+80.00	TO	953+30.00	WB	50.00	43.25		240.28				10			14		20					
RESURFACING AND FULL DEPTH																					
955+90.00	TO	956+40.00	EB	50.00	33.50	28.50	186.11	158.33		3	8	3	50	11	19	16	9				
955+90.00	TO	956+40.00	WB	50.00	33.50	28.50	186.11	158.33		3	8	3	50	11	19	16	9				
966+20.00	TO	966+70.00	EB	50.00	33.50	28.50	186.11	158.33		3	8	3	50	11	19	16	9				
966+20.00	TO	966+70.00	WB	50.00	33.50	28.50	186.11	158.33		3	8	3	50	11	19	16	9				
NORMAL SECTION																					
956+40.00	TO	966+20.00	EB	980.00		28.50		3,103.33		62		61	980		364		178				
956+40.00	TO	966+20.00	WB	980.00		28.50		3,103.33		62		61	980		364		178				
NORMAL FULL WIDTH																					
953+30.00	TO	953+82.97	EB	52.97		53.00		311.93		6		9	44		40		21		2		
953+30.00	TO	953+85.06	WB	55.06		53.00		324.24		6		10	44		42		22		2		
955+39.84	TO	955+90.00	EB	50.16		53.00		295.39		5		9	34		38		20		2		
955+41.94	TO	955+90.00	WB	48.06		53.00		283.02		5		8	34		37		19		2		
966+70.00	TO	967+19.63	EB	49.63		53.00		292.27		5		9	34		38		20		2		
966+70.00	TO	967+21.75	WB	51.75		53.00		304.75		6		9	34		39		21		2		
SUPERELEVATED FULL WIDTH																					
968+76.99	TO	969+30.00	EB	53.01		53.00		312.17		6		9	44		40		21		2		
968+79.15	TO	969+30.00	WB	50.85		53.00		299.45		6		9	44		39		21		2		
NORMAL APPROACH SLAB																					
953+82.97	TO	953+97.98	EB	15.01		62.50		104.24											1		
953+85.06	TO	954+00.07	WB	15.01		62.50		104.24	563.32										1		
955+24.83	TO	955+39.84	EB	15.01		62.50		104.24											1		
955+26.93	TO	955+41.94	WB	15.01		62.50		104.24	579.96										1		
967+19.63	TO	967+34.64	EB	15.01		62.50		104.24	596.50										1		
967+21.75	TO	967+36.76	WB	15.01		62.50		104.24											1		
SUPERELEVATED APPROACH SLAB																					
968+61.98	TO	968+76.99	EB	15.01		62.50		104.24	576.80										1		
968+64.14	TO	968+79.15	WB	15.01		62.50		104.24											1		
ENTIRE PROJECT LENGTH																					
953+30.00	TO	969+30.00	EB/WB	1,600.00					38,687.00												
									SUBTOTALS	181	51	206	2472	72	1,117	103	557		24		
									TOTALS CARRIED TO GENERAL SUMMARY	181	257		2472	1,849					24		

1

2

2

DESIGN AGENCY
DGL CONSULTING ENGINEERS, LLC
3465 BRIARFIELD BLVD. SUITE E
MAUMEE, OH 43537

NO.	REVISIONS	BY	DATE
1	ADDENDUM NO. 1	AC	12/20
2	ADDENDUM NO. 2	SRC	12/21
-	-	-	-

DESIGNED	CHECKED
ADC	RJM
DRAWN	IN CHARGE
ADC	AEH

PAVEMENT SUBSUMMARY

PROJECT 43-22-02

DATE: 11/20/20

OHIO TURNPIKE AND INFRASTRUCTURE COMMISSION

19172_Subsummary_Pavement.dwg: 12/28/21 - 9:00am

ESTIMATED QUANTITIES						
ITEM	GRAND TOTAL	UNIT	DESCRIPTION	M.P. 40.3	M.P. 40.5	AS PER PLAN REFERENCE SHEET NUMBER
SP 202	LUMP	LS	PORTIONS OF STRUCTURE REMOVED	LUMP	LUMP	
202	520	SY	APPROACH SLAB REMOVED	260	260	
503	570	CY	UNCLASSIFIED EXCAVATION, AS PER PLAN	410	160	82/143
503	LUMP	LS	COFFERDAMS AND EXCAVATION BRACING	LUMP	LUMP	
505	LUMP	LS	PILE DRIVING EQUIPMENT MOBILIZATION	LUMP	LUMP	
507	4,350	FT	STEEL PILES HP10X42, FURNISHED	3,330	1,020	
507	3,900	FT	STEEL PILES HP10X42, DRIVEN	3,000	900	
509	500	LBS	REINFORCING STEEL, REPLACEMENT OF EXISTING REINFORCING STEEL	250	250	
SP 509	306,243	LBS	EPOXY COATED REINFORCING STEEL, GRADE 60	156,841	149,402	
510	312	EACH	DOWEL HOLES WITH NONSHRINK, NONMETALLIC GROUT	120	192	
511	120	CY	CLASS QC1 CONCRETE, PIER ABOVE FOOTINGS	67	53	
511	241	CY	CLASS QC1 CONCRETE, ABUTMENT INCLUDING FOOTING	122	119	
511	45	CY	CLASS QC1 CONCRETE, FOOTING	45	0	
SP 511B	766	CY	CLASS HP4 CONCRETE, SUPERSTRUCTURE DECK SLAB	389	377	
SP 511B	164 1	CY	CLASS HP4 CONCRETE, ABUTMENT SLABS	82	82	
SP 511B	32	CY	CLASS HP4 CONCRETE, FOR PREPLACEMENT TESTING	16	16	1
SP 511B	153	CY	CLASS S CONCRETE, BARRIERS AND PARAPETS, USING TYPE 1 CEMENT	76	77	
513	400	LBS	STRUCTURAL STEEL MEMBERS, LEVEL UF, AS PER PLAN	200	200	82/143
513	185,600	LBS	STRUCTURAL STEEL MEMBERS, LEVEL 3	92,600	93,000	
513	10,698	EACH	WELDED STUD SHEAR CONNECTORS	5,178	5,520	
SP 514A	1 LUMP	LS	SURFACE PREPARATION OF EXISTING STEEL, SYSTEM OZEU	LUMP	LUMP	1
SP 514A	LUMP	LS	FIELD PAINTING OF EXISTING STEEL, PRIME COAT, SYSTEM OZEU	LUMP	LUMP	
SP 514A	LUMP	LS	FIELD PAINTING OF NEW AND EXISTING STEEL, INTERMEDIATE COAT, SYSTEM OZEU	LUMP	LUMP	
SP 514A	LUMP	LS	FIELD PAINTING OF NEW AND EXISTING STEEL, FINISH COAT, SYSTEM OZEU	LUMP	LUMP	
SP 514A	6	HOUR	GRINDING FINS, TEARS, SLIVERS	3	3	
SP 514A	6	HOUR	REMEDIATION OF CHLORIDES	3	3	
516	24	EACH	ELASTOMERIC BEARING WITH INTERNAL LAMINATES AND LOAD PLATE (NEOPRENE)	12	12	
516	24	EACH	BEARING DEVICE, ROCKER	12	12	
SP 516B	2,125	FT	SEALING OF CONSTRUCTION JOINTS	1,061	1,064	
SP 516G	24	EACH	REPLACE EXPANSION BEARING DEVICE	12	12	
SP 516J	24	EACH	REPLACE FIXED BEARING DEVICE	12	12	
SP 516M	48	EACH	RESET EXISTING ROCKER BEARING	24	24	
SP 519	222	SF	PATCHING CONCRETE STRUCTURE	102	120	
523	5	EACH	DYNAMIC LOAD TESTING	3	2	
SP 525A	LUMP	LS	WORKER PROTECTION	LUMP	LUMP	
SP 525A	32	EACH	PROTECTIVE CLOTHING/EQUIPMENT SET	16	16	
SP 525A	LUMP	LS	ESTABLISH REGULATED AREAS	LUMP	LUMP	
SP 525A	LUMP	LS	PAINT WASTE/HAZARDOUS WASTE CLASSIFICATION, HANDLING, AND DISPOSAL	LUMP	LUMP	
SP 525A	LUMP	LS	CONTAINMENT SYSTEM	LUMP	LUMP	
526	848	SY	REINFORCED CONCRETE APPROACH SLABS (T = 12"), AS PER PLAN	424	424	98/143 & 129/143
SP 527	LUMP	LS	FALSEWORK, TEMPORARY BRACING AND PROTECTIVE STRUCTURES	LUMP	LUMP	
SP 533	250	FT	THREE (3) INCH CONTINUOUS STRIP SEAL IN STRUCTURAL STEEL JOINT	125	125	
SP 533A	250	FT	1 1/2" ELASTOMERIC COMPRESSION SEAL IN STRUCTURAL STEEL JOINT	125	125	
SP 536	4,110	SY	CONCRETE WEATHERPROOFING, DECK, ABUTMENT SLABS, AND APPROACH SLABS	2,050	2,060	
SP 536	480	SY	CONCRETE WEATHERPROOFING, SUBSTRUCTURE	300	180	
601	570	SY	CRUSHED AGGREGATE SLOPE PROTECTION	290	280	

DESIGN AGENCY
DGL CONSULTING ENGINEERS, LLC
3455 BRIARFIELD BLVD. SUITE E
MAUMEE, OH 43537

NO.	REVISIONS	BY	DATE
1	ADDENDUM NO. 2	NBL	12/21
-	-	-	-
-	-	-	-

DESIGNED	CHECKED
SAM	NBL
DRAWN	IN CHARGE
NBL	AEH

ESTIMATED QUANTITIES

FULTON COUNTY

M.P. 40.3 & 40.5

PROJECT 43-22-02

DATE: 08/28/20

3 / 3

83 / 143

OHIO TURNPIKE AND INFRASTRUCTURE COMMISSION

2020-08-20-191172 - General Notes.dwg: 12/29/21 - 8:40am

MARK	NUMBER	LENGTH	WEIGHT	TYPE	DIMENSIONS						
					A	B	C	D	E	R	INC.
SUPERSTRUCTURE REINFORCING STEEL											
S401	432	30'-0"	8,658	STR.	30'-0"						
S402	144	22'-0"	2,116	STR.	22'-0"						
S501	420	30'-0"	13,142	STR.	30'-0"						
S502	140	23'-6"	3,432	STR.	23'-6"						
S503*	364	34'-11"	13,256	16	34'-4"						
S504*	364	29'-4"	11,136	16	28'-9"						
S505*	364	34'-3"	13,004	STR.	34'-3"						
S506*	364	28'-9"	10,914	STR.	28'-9"						
S507	24	7'-9"	194	STR.	7'-9"						
S508	144	7'-0"	1,052	STR.	7'-0"						
S509	212	8'-1"	1,788	16	7'-6"						
S510	226	8'-10"	2,082	16	8'-3"						
S601	8	7'-9"	94	STR.	7'-9"						
S602	48	7'-0"	504	STR.	7'-0"						
S603	212	6'-11"	2,202	54	2'-1"	1'-2 1/4"	7"	1'-0"			
S604	212	7'-1"	2,256	23	6"	3'-3"	3'-3"				
S605	226	11'-9"	3,988	23	1'-3 1/2"	1'-0"	7 3/4"	4'-0"			
S606	284	23'-0"	9,812	STR.	23'-0"						
S607	8	34'-3"	412	STR.	34'-3"						
S608	8	28'-9"	346	STR.	28'-9"						
SUPERSTRUCTURE TOTAL =			100,388								

MARK	NUMBER	LENGTH	WEIGHT	TYPE	DIMENSIONS						
					A	B	C	D	E	R	INC.
PIER REINFORCING STEEL											
P501	8	30'-0"	250	STR.	30'-0"						
P502	8	14'-9"	123	STR.	14'-9"						
P503	8	9'-3"	77	2	3'-5"	2'-8"	3'-5"				
P504	116	7'-5"	897	2	2'-6"	2'-8"	2'-6"				
P505	64	5'-5"	362	2	2'-6"	8"	2'-6"				
P506	228	6'-9"	1,843	15	6"	2'-0"	5"	5"	2'-0"		
P601	8	11'-11"	143	2	3'-9"	4'-9"	3'-9"				
P602	16	12'-7"	302	53	3'-3"	2'-8"	9"	9"			
P801	144	8'-6"	3,268	STR.	8'-6"						
P901	20	8'-3"	561	1	3'-9"	4'-9"					
P902	8	2'-6"	68	STR.	2'-6"						
P903	20	8'-2"	555	1	3'-8"	4'-9"					
P904	12	30'-0"	1,224	1	29'-0"	1'-3"					
P905	12	22'-0"	898	1	21'-0"	1'-3"					
P906	24	25'-1"	2,047	19	21'-0"	4'-1"	6"				
P1001	36	20'-6"	3,176	STR.	20'-6"						
P1002	36	21'-3"	3,292	STR.	21'-3"						
P1003	72	14'-3"	4,415	1	1'-10"	12'-9"					
PIER TOTAL =			23,501								

MARK	NUMBER	LENGTH	WEIGHT	TYPE	DIMENSIONS						
					A	B	C	D	E	R	INC.
ABUTMENT REINFORCING STEEL											
A401	30	6'-6"	130	13	3'-7"	4"	1'-7"	1'-4"			
A402	24	6'-4"	102	25	2'-6"	2'-5"	1'-3 3/4"	1 1/2"	6 1/2"		
A403	24	5'-0"	80	STR.	5'-0"						
A404	48	8'-3"	264	STR.	8'-3"						
A405	60	4'-5"	178	11	7"	3'-0"	1'-6"				
A501	56	25'-6"	1,490	STR.	25'-6"						
A502	132	12'-1"	1,664	2	4'-6"	3'-4"	4'-6"				
A503	84	10'-7"	928	2	5'-0"	10"	5'-0"				
A504	84	5'-7"	490	2	2'-6"	10"	2'-6"				
A505	10	12'-3"	128	3	5'-0"	10"					
A506	152	7'-4"	1,162	2	2'-6"	2'-7"	2'-6"				
A507	76	7'-0"	554	2	3'-0"	1'-3"	3'-0"				
A508	240	9'-9"	2,440	STR.	9'-9"						
A509*	44	34'-3"	1,572	STR.	34'-3"						
A510*	44	31'-0"	1,422	STR.	31'-0"						
A511	16	11'-0"	184	STR.	11'-0"						
A512	20	10'-6"	220	STR.	10'-6"						
A601*	44	34'-3"	2,264	STR.	34'-3"						
A602*	44	32'-0"	2,114	STR.	32'-0"						
	8	3'-11"			1'-0"	3'-1"					
A603	SER.	TO	520	1	TO	TO					1 1/8"
	10	4'-9"			1'-0"	3'-11"					
A604	40	3'-11"	236	1	1'-0"	3'-1"					
A701	476	9'-9"	9,486	STR.	9'-9"						
A702	24	11'-0"	540	STR.	11'-0"						
A801	64	28'-0"	4,784	STR.	28'-0"						
ABUTMENT TOTAL =			32952								

MP40.3 REINFORCING STEEL GRAND TOTALS	
100,388	= TOTAL SUPERSTRUCTURE REINFORCING STEEL WEIGHT (LBS.)
32,952	= TOTAL ABUTMENT REINFORCING STEEL WEIGHT (LBS.)
23,263	= TOTAL PIER REINFORCING STEEL WEIGHT (LBS.)
156,603	= TOTAL REINFORCING STEEL WEIGHT (LBS.)

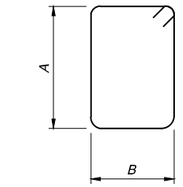

TYPE 3

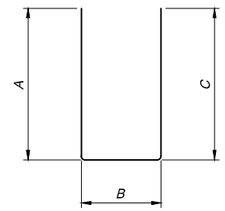

TYPE 2

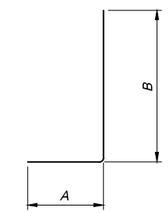

TYPE 1

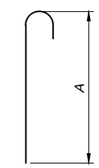

TYPE 16

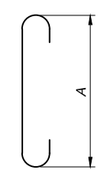

TYPE 17

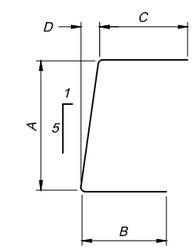

TYPE 51

NOTES

1. ALL REINFORCING SHALL BE EPOXY COATED.
2. BAR DIMENSIONS ARE OUT TO OUT UNLESS OTHERWISE INDICATED.
3. BAR SIZE IS INDICATED IN THE BAR MARK BY THE FIRST DIGIT WHERE 3 DIGITS ARE USED, AND BY THE FIRST TWO DIGITS WHEN FOUR DIGITS ARE USED.
4. EPOXY COATED REINFORCING STEEL SUPPORT: IN ACCORDANCE WITH THE REQUIREMENTS OF SP 509 AND 509.09, THE TOP AND BOTTOM MATS OF THE LONGITUDINAL AND TRANSVERSE EPOXY COATED REINFORCING STEEL SHALL BE SUPPORTED BY APPROVED EPOXY COATED DEVICES WITH SPACING NOT EXCEEDING 3'-0" CENTERS IN EACH DIRECTION. BROKEN CONCRETE, BRICKS, ETC. SHALL NOT BE USED FOR SUPPORT OF REINFORCING STEEL.
5. * DENOTES BARS PLACED INTO MECHANICAL SPLICES

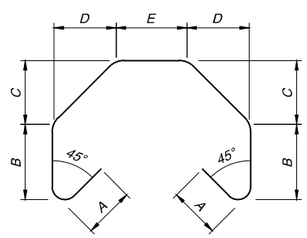

TYPE 15

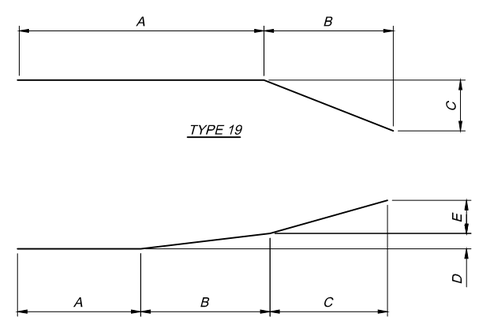

TYPE 19

TYPE 25

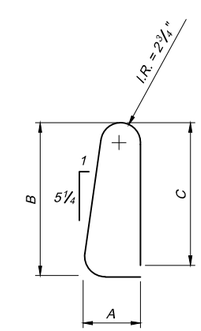

TYPE 23

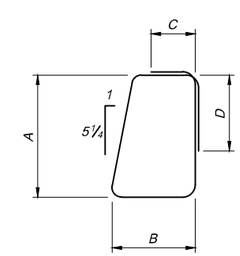

TYPE 54

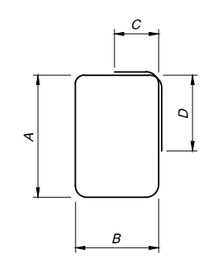

TYPE 53

BAR BENDING DIAGRAMS

403_Reinforcing Schedule.dwg: 12/28/21 - 8:34am

DESIGN AGENCY
DGL CONSULTING ENGINEERS, LLC
3455 BRIARFIELD BLVD. SUITE E
MAUMEE, OH 43537

NO.	REVISIONS	BY	DATE
1	ADDENDUM NO. 2	NBL	12/21
-	-	-	-
-	-	-	-

DESIGNED SAM | CHECKED NBL | DRAWN SAH | IN CHARGE AEH

REINFORCING SCHEDULE
OHIO TURNPIKE OVER STATE ROUTE 109
FULTON COUNTY
M.P. 40.3

PROJECT 43-22-02
DATE: 08/28/20

29 / 29

112 / 143

OHIO TURNPIKE AND INFRASTRUCTURE COMMISSION

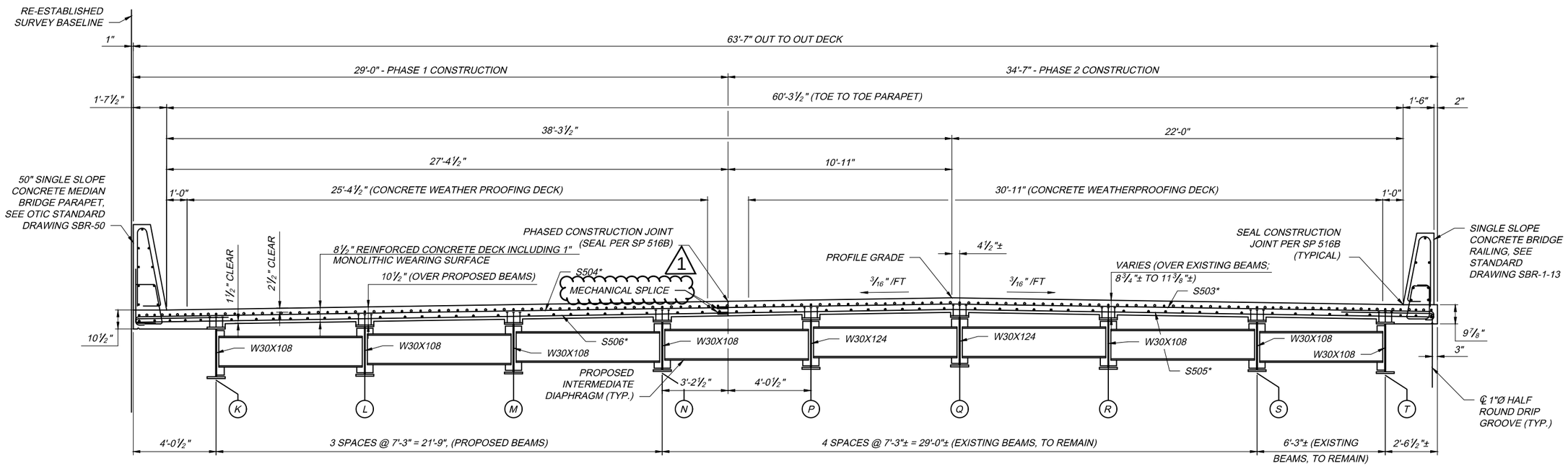

RIGHT TRANSVERSE SECTION

(LOOKING FORWARD)

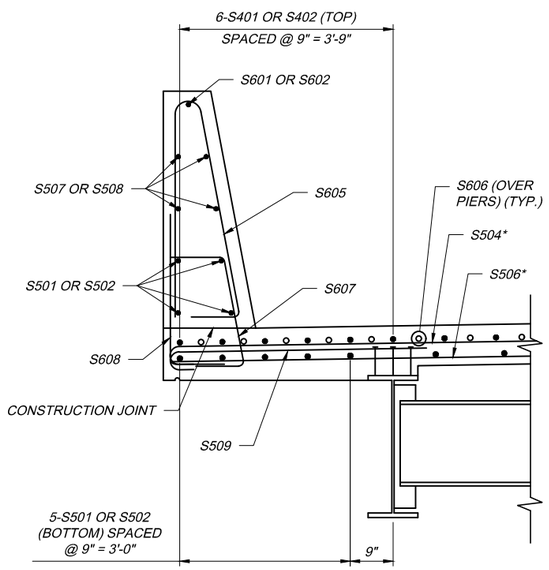

LEFT FASCIA REINFORCING

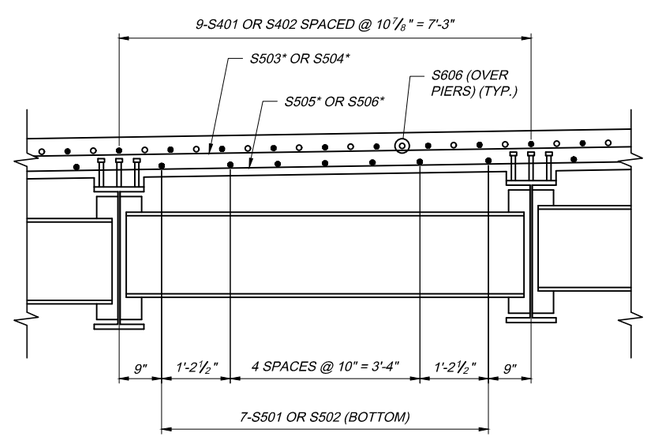

REINFORCEMENT BETWEEN BEAMS

(7'-3" WIDE BAYS)

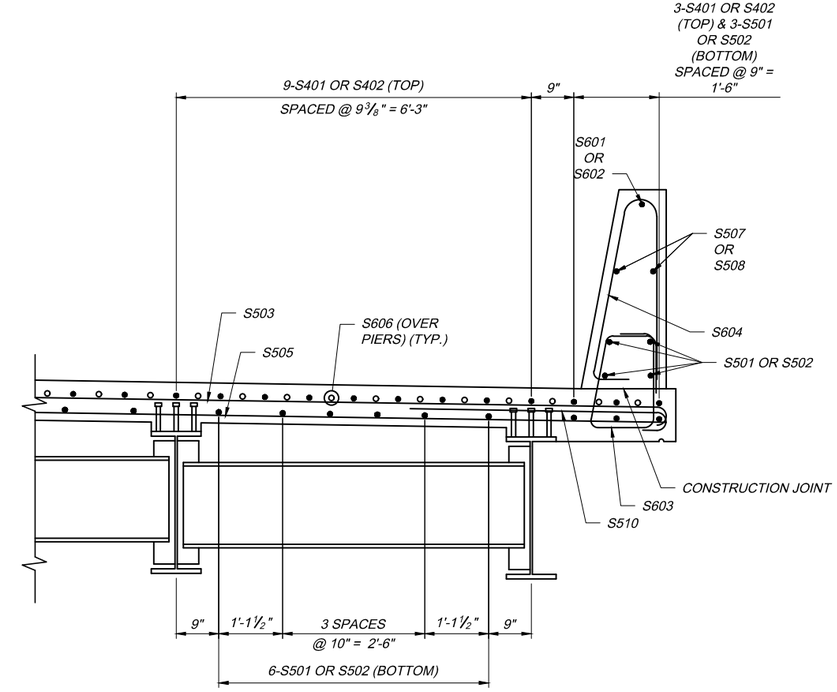

RIGHT FASCIA REINFORCEMENT

NOTES

1. FOR ABUTMENT SLAB DETAILS SEE SHEETS 11-17/31.
2. FOR DECK JOINT DETAILS, SEE OTIC STANDARD DRAWINGS DJ-1 AND DJ-2.
3. LONGITUDINAL AND TRANSVERSE CONSTRUCTION JOINTS SHALL BE TREATED IN ACCORDANCE WITH ITEM SP 516B - SEALING OF CONSTRUCTION JOINTS.
4. * - DENOTES BAR PLACED INTO A MECHANICAL SPLICE.
5. MINIMUM BAR LAPS:
   NUMBER 4 BARS 1'-11"
   NUMBER 5 BARS 2'-5"
   NUMBER 6 BARS 2'-10"

DESIGN AGENCY
DGL CONSULTING ENGINEERS, LLC
3455 BRIARFIELD BLVD, SUITE E
MAUMEE, OH 43537

NO.	REVISIONS	BY	DATE
1	ADDENDUM NO. 2	NBL	12/21
-	-	-	-
-	-	-	-

DESIGNED	CHECKED	DRAWN	IN CHARGE
SAM	NBL	SAH	AEH

TRANSVERSE DECK SECTION DETAILS
OHIO TURNPIKE OVER INDIANA AND OHIO RAILWAY
M.P. 40.5
FULTON COUNTY

PROJECT 43-22-02
DATE: 08/28/20

28/31

140/143

OHIO TURNPIKE AND INFRASTRUCTURE COMMISSION

405_Deck Slab.dwg; 12/28/21 - 8:42am

MARK	NUMBER	LENGTH	WEIGHT	TYPE	DIMENSIONS						
					A	B	C	D	E	R	INC.
SUPERSTRUCTURE REINFORCING STEEL											
S401	438	30'-0"	8,778	STR.	30'-0"						
S402	146	23'-0"	2,244	STR.	23'-0"						
S501	426	30'-0"	13,330	STR.	30'-0"						
S502	142	24'-0"	3,554	STR.	24'-0"						
S503*	366	34'-11"	13,330	16	34'-4"						
S504*	366	29'-4"	11,198	16	28'-9"						
S505*	366	34'-3"	13,074	STR.	34'-3"						
S506*	366	28'-9"	10,974	STR.	28'-9"						
S507	24	5'-9"	144	STR.	5'-9"						
S508	156	6'-9"	1,098	STR.	6'-9"						
S509	114	6'-9"	1,120	16	8'-10"						
S510	108	7'-8"	864	16	7'-1"						
S511	222	8'-5"	1,948	16	7'-10"						
S601	8	5'-9"	70	STR.	5'-9"						
S602	26	6'-9"	264	STR.	6'-9"						
S603	216	6'-11"	2,244	54	2'-1"	1'-2 1/4"	7"	1'-0"			
S604	216	7'-1"	2,298	23	6"	3'-3"	3'-3"				
S605	228	11'-9"	4,024	23	1'-7 3/4"	1'-0"	7 3/4"	4'-0"			
S606	288	27'-0"	11,680	STR.	27'-0"						
S607	8	34'-3"	412	STR.	34'-3"						
S608	8	28'-9"	346	STR.	28'-9"						
SUPERSTRUCTURE TOTAL =			102,994								

MARK	NUMBER	LENGTH	WEIGHT	TYPE	DIMENSIONS						
					A	B	C	D	E	R	INC.
PIER REINFORCING STEEL											
P501	8	30'-0"	250	STR.	30'-0"						
P502	8	14'-9"	123	STR.	14'-9"						
P503	8	9'-3"	77	2	3'-5"	2'-8"	3'-5"				
P504	116	7'-5"	897	2	2'-6"	2'-8"	2'-6"				
P505	64	5'-5"	362	2	2'-6"	8"	2'-6"				
P506	132	6'-9"	1,067	15	6"	2'-0"	5"	5"	2'-0"		
P601	8	11'-11"	143	2	3'-9"	4'-9"	3'-9"				
P602	16	12'-7"	302	53	3'-3"	2'-8"	9"	9"			
P901	20	8'-3"	561	1	3'-9"	4'-9"					
P902	8	2'-6"	68	STR.	2'-6"						
P903	20	8'-2"	555	1	3'-8"	4'-9"					
P904	12	30'-0"	1,224	1	29'-0"	1'-3"					
P905	12	22'-0"	898	1	21'-0"	1'-3"					
P906	24	25'-1"	2,047	19	21'-0"	4'-1"	6"				
P1001	72	14'-9"	4,880	STR.	15'-9"						
PIER TOTAL =			13,454								

MARK	NUMBER	LENGTH	WEIGHT	TYPE	DIMENSIONS						
					A	B	C	D	E	R	INC.
ABUTMENT REINFORCING STEEL											
A401	30	6'-6"	130	13	3'-7"	4"	1'-7"	1'-4"			
A402	24	6'-4"	102	25	2'-6"	2'-5"	1'-3 3/4"	1 1/2"	6 1/2"		
A403	24	5'-0"	80	STR.	5'-0"						
A404	48	8'-3"	264	STR.	8'-3"						
A405	60	4'-5"	178	11	7"	3'-0"	1'-6"				
A501	56	25'-6"	1,490	STR.	25'-6"						
A502	132	12'-1"	1,664	2	4'-6"	3'-4"	4'-6"				
A503	84	10'-7"	928	2	5'-0"	10"	5'-0"				
A504	84	5'-7"	490	2	2'-6"	10"	2'-6"				
A505	10	12'-3"	128	3	5'-0"	10"					
A506	152	7'-4"	1,163	2	2'-6"	2'-7"	2'-6"				
A507	76	7'-0"	555	2	3'-0"	1'-3"	3'-0"				
A508	240	9'-9"	2,440	STR.	9'-9"						
A509*	44	34'-3"	1,572	STR.	34'-3"						
A510*	44	31'-0"	1,422	STR.	31'-0"						
A511	16	11'-0"	184	STR.	11'-0"						
A512	20	10'-6"	220	STR.	10'-6"						
A601*	44	34'-3"	2,264	STR.	34'-3"						
A602*	44	32'-0"	2,114	STR.	32'-0"						
	8	3'-11"			1'-0"	3'-1"					
A603	SER.	TO	520	1	TO	TO					1 1/8"
	10	4'-9"			1'-0"	3'-11"					
A604	40	3'-11"	236	1	1'-0"	3'-1"					
A701	476	9'-9"	9,486	STR.	9'-9"						
A702	24	11'-0"	540	STR.	11'-0"						
A801	64	28'-0"	4,784	STR.	28'-0"						
ABUTMENT TOTAL =			32,954								

MP40.5 REINFORCING STEEL GRAND TOTALS	
102,994	= TOTAL SUPERSTRUCTURE REINFORCING STEEL WEIGHT (LBS.)
32,954	= TOTAL ABUTMENT REINFORCING STEEL WEIGHT (LBS.)
13,006	= TOTAL PIER REINFORCING STEEL WEIGHT (LBS.)
148,954	= TOTAL REINFORCING STEEL WEIGHT (LBS.)

NOTES

1. ALL REINFORCING SHALL BE EPOXY COATED.
2. BAR DIMENSIONS ARE OUT TO OUT UNLESS OTHERWISE INDICATED.
3. BAR SIZE IS INDICATED IN THE BAR MARK BY THE FIRST DIGIT WHERE 3 DIGITS ARE USED, AND BY THE FIRST TWO DIGITS WHEN FOUR DIGITS ARE USED.
4. EPOXY COATED REINFORCING STEEL SUPPORT: IN ACCORDANCE WITH THE REQUIREMENTS OF SP 509 AND 509.09, THE TOP AND BOTTOM MATS OF THE LONGITUDINAL AND TRANSVERSE EPOXY COATED REINFORCING STEEL SHALL BE SUPPORTED BY APPROVED EPOXY COATED DEVICES WITH SPACING NOT EXCEEDING 3'-0" CENTERS IN EACH DIRECTION. BROKEN CONCRETE, BRICKS, ETC. SHALL NOT BE USED FOR SUPPORT OF REINFORCING STEEL.
5. * DENOTES BARS PLACED INTO MECHANICAL SPLICES

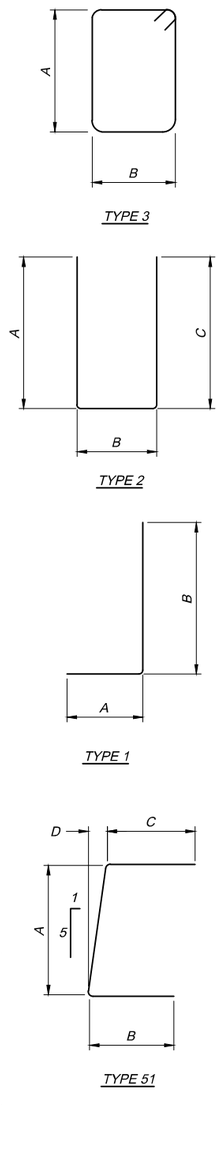

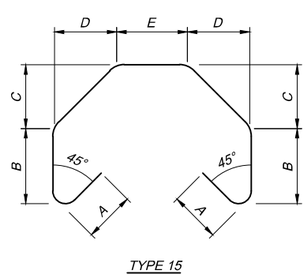

TYPE 15

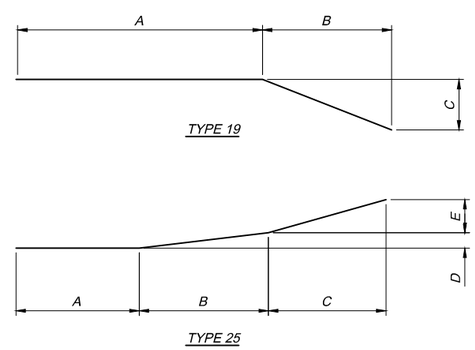

TYPE 25

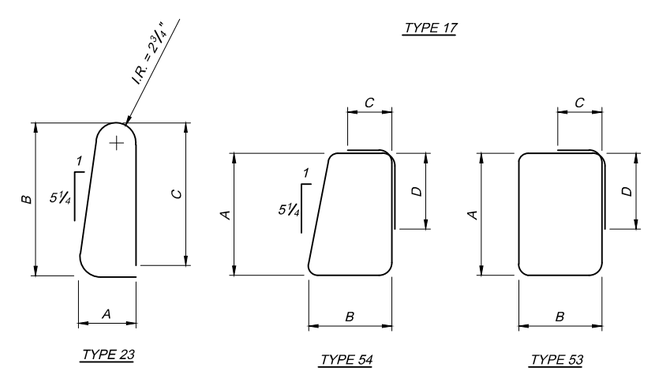

BAR BENDING DIAGRAMS

DESIGN AGENCY
DGL CONSULTING ENGINEERS, LLC
3455 BRIARFIELD BLVD. SUITE E
MAUMEE, OH 43537

NO.	REVISIONS	BY	DATE
1	ADDENDUM NO. 2	NBL	12/21
-	-	-	-
-	-	-	-

DESIGNED	CHECKED
SAM	NBL
DRAWN	IN CHARGE
SAH	AEH

PROJECT 43-22-02
DATE: 08/28/20

REINFORCING SCHEDULE
OHIO TURNPIKE OVER INDIANA AND OHIO RAILWAY
M.P. 40.5
FULTON COUNTY

31 / 31

143 / 143

OHIO TURNPIKE AND INFRASTRUCTURE COMMISSION

405_Reinforcing Schedule.dwg: 12/28/21 - 8:45am