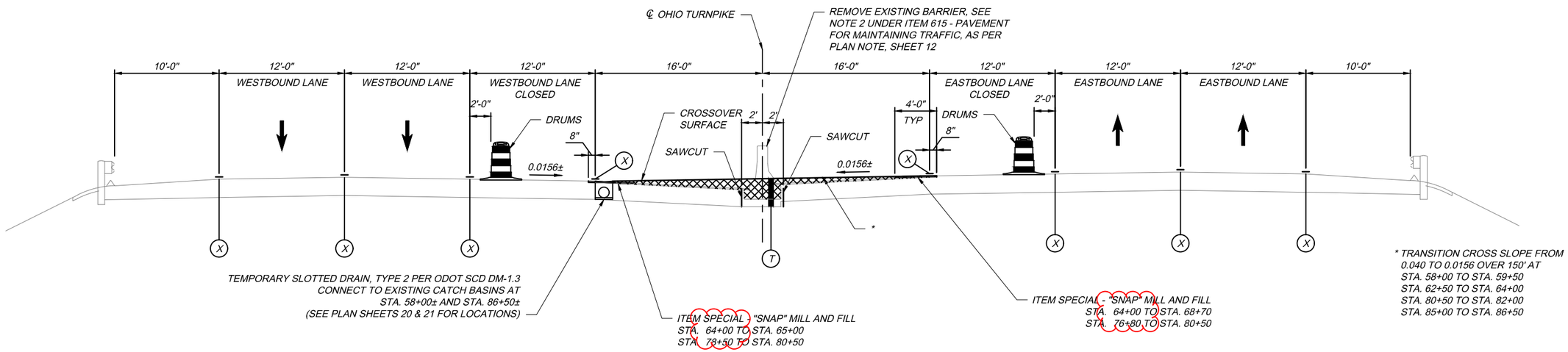

MOT TYPICAL SECTION - CROSSOVER CONSTRUCTION AND INSIDE LANE SNAP REMOVAL

STA. 58+00 TO STA. 64+00
STA. 80+50 TO STA. 86+50 (OPPOSITE HAND)

LEGEND

		PROPOSED TEMPORARY PAVEMENT, MINIMUM 1 ½" THICKNESS. FOR ADDITIONAL CROSSOVER INFORMATION SEE NOTE ITEM 615 - PAVEMENT FOR MAINTAINING TRAFFIC, CLASS A, AS PER PLAN ON SHEET 12
1	SP 404	ASPHALT CONCRETE SURFACE COURSE, USING CRUSHED STONE, PG 64-22 (T=1-1/2")
2	SP 402	ASPHALT CONCRETE INTERMEDIATE COURSE OR RECYCLED ASPHALT CONCRETE INTERMEDIATE COURSE, PG 64-22 (T=1-3/4")
3	SP 302	ASPHALT CONCRETE BASE, PG 64-22 (T=12") (2 EQUAL LIFTS)
4	SP 304	AGGREGATE BASE (T=6")
5	ITEM 407	NON-TRACKING TACK COAT (APPLIED @ 0.06 GAL./S.Y.)
6	ITEM 622	CONCRETE BARRIER, TYPE C-50, AS PER PLAN
7	SP 404A	JOINT SEALER (APPLIED TO VERTICAL FACE)
X		EXISTING PAVEMENT MARKINGS
T		PAVEMENT FOR MAINTAINING TRAFFIC, TYPE A, AS PER PLAN

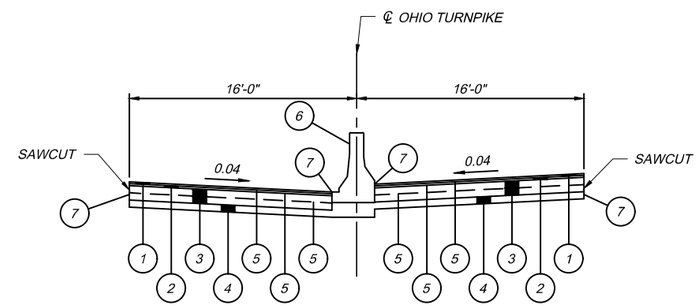

CROSSOVER RESTORATION TYPICAL SECTION

STA. 58+00 TO STA. 64+00
STA. 80+50 TO STA. 86+50 (OPPOSITE HAND)

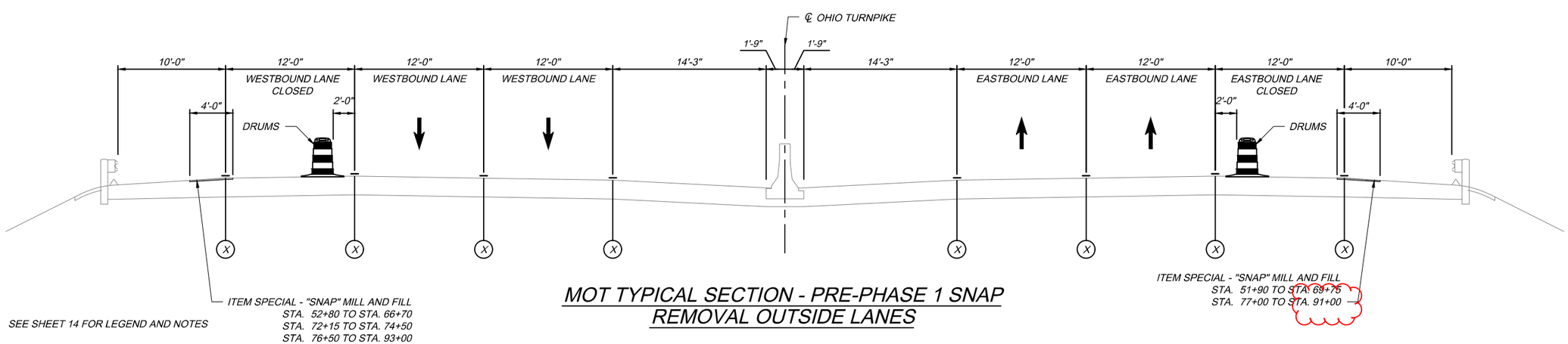

SEE SHEET 14 FOR LEGEND AND NOTES

MOT TYPICAL SECTION - PRE-PHASE 1 SNAP REMOVAL OUTSIDE LANES

71-21-04-MOT TYPICAL.dwg; 3/26/24 - 1:43pm

DESIGN AGENCY
DGL CONSULTING ENGINEERS, LLC
3455 BRIARFIELD BLVD, SUITE E
MAUMEE, OH 43537

NO.	REVISIONS	BY	DATE
1	REVISED STATIONS	SRC	3/26/24
-	-	-	-
-	-	-	-

DESIGNED	CHECKED
SRC	RJM
DRAWN	IN CHARGE
SRC	AEH

MAINTENANCE OF TRAFFIC TYPICAL SECTIONS
CROSSOVER AND SNAP REMOVAL
SANDUSKY COUNTY
M.P. 83.3

PROJECT 43-24-03
DATE: 09/01/23

13
110

OHIO TURNPIKE AND INFRASTRUCTURE COMMISSION

REF NO.	SHEET NO.	STATION TO STATION			SIDE		614 WORK ZONE IMPACT ATTENUATOR	614 BARRIER REFLECTOR, TYPE B (ONE-WAY)	614 OBJECT MARKER, ONE WAY	614 OBJECT MARKER, TWO WAY	614 WORK ZONE LANE LINE, CLASS I, 6"	614 WORK ZONE EDGE LINE, CLASS I, 6" (WHITE)	614 WORK ZONE EDGE LINE, CLASS I, 8" (WHITE)	614 WORK ZONE EDGE LINE, CLASS I, 6" (YELLOW)	614 WORK ZONE EDGE LINE, CLASS I, 8" (YELLOW)	614 WORK ZONE CHANNELIZING LINE, CLASS I, 8"	SP 614B WORK ZONE LANE LINE, 6"	SP 614B WORK ZONE EDGE LINE, 6" (WHITE)	SP 614B WORK ZONE EDGE LINE, 6" (YELLOW)	SP 614C REMOVAL OF PAVEMENT MARKINGS	SP 622 32" PORTABLE BARRIER (BRIDGE MOUNTED)	SP 622 32" PORTABLE BARRIER (WITHOUT GLARE SCREEN)	SP 622 32" PORTABLE BARRIER (WITH GLARE SCREEN)	SPECIAL "SNAP" - MILL AND FILL
							EACH	EACH	EACH	EACH	MILE	MILE	MILE	MILE	MILE	FT	MILE	MILE	MILE	MILE	FT	FT	FT	FT
PHASE 1																								
B1	20-21	57+90		84+00	RIGHT			106		53														2610
B2	20-21	64+00		68+00	RIGHT			9	9													400		
		68+00		77+00	RIGHT			19	19												900			
		77+00		88+46	RIGHT																	1150		
I1	21	88+46			RIGHT		1																	
Y1	19-21	33+00		49+40	RIGHT									1640										
		49+40		60+40	RIGHT										1100									
		60+40		81+50	RIGHT									1280					830					
		81+50		92+50	RIGHT										1100									
Y2	20-21	58+90		66+50	LT & RT										760									
		66+50		78+90	RIGHT									410					830					
		78+90		89+00	LT & RT										1010									
CH1	20	49+40		60+40	RIGHT											1100								
CH2	21	81+50		92+50	RIGHT											1100								
CH3	20	58+90		66+50	LT & RT											760								
CH4	21	78+90		89+00	LT & RT											1010								
W1	20-21	49+40		60+40	RIGHT								1100											
		60+40		81+50	RIGHT							1280						830						
		81+50		92+50	RIGHT								1100											
W2	20-22	58+90		66+50	LT & RT							760												
		66+50		78+90	RIGHT								410					830						
		78+90		89+00	LT & RT							1010												
		89+00		105+50	LEFT								1650											
L1	20-21	60+40		81+50	RIGHT						1280						830							
L2	20-21	66+50		78+90	RIGHT						410						830							
X1	19	33+00		41+40	RIGHT															840				
X2	20-21	51+90		91+00	RIGHT															3910				
X3	20-21	58+00		86+50	RIGHT															2850				
X4	20-21	63+50		86+50	RIGHT															2300				
X5	20-21	69+75		77+00	RIGHT															725				
X6	20	58+00		60+50	LEFT															250				
X7	21	83+75		86+25	LEFT															250				
S1	20	51+90		69+75	OUT RT																			1785
S2	21	77+00		91+00	OUT RT																			1400
S3	20	64+00		68+70	IN RT																			470
S4	21	76+80		80+50	IN RT																			370
TOTALS CARRIED TO SHEET 18							1	134	28	53	1690	3050	4260	3330	3970	3970	1660	1660	1660	11125	900	1550	2610	4025

DESIGN AGENCY
DGL CONSULTING ENGINEERS, LLC
3455 BRIARFIELD BLVD. SUITE E
MAUMEE, OH 43537

NO.	REVISIONS	BY	DATE
1	REVISED STATION	SRC	3/26/24
-	-	-	-
-	-	-	-

CHECKED RJM
IN CHARGE AEH
DESIGNED SRC
DRAWN SRC

MAINTENANCE OF TRAFFIC SUBSUMMARY
SANDUSKY COUNTY
M.P. 83.3

PROJECT 43-24-06
DATE: 09/01/23

OHIO TURNPIKE AND INFRASTRUCTURE COMMISSION

71-21-04-MOT SUBSUMMARY.dwg; 3/26/24 - 1:44pm

REF NO.	SHEET NO.	STATION TO STATION			SIDE		614 WORK ZONE IMPACT ATTENUATOR	614 BARRIER REFLECTOR, TYPE B (ONE-WAY)	614 OBJECT MARKER, ONE WAY	614 OBJECT MARKER, TWO WAY	614 WORK ZONE LANE LINE, CLASS I, 6"	614 WORK ZONE EDGE LINE, CLASS I, 6" (WHITE)	614 WORK ZONE EDGE LINE, CLASS I, 8" (WHITE)	614 WORK ZONE EDGE LINE, CLASS I, 6" (YELLOW)	614 WORK ZONE EDGE LINE, CLASS I, 8" (YELLOW)	614 WORK ZONE CHANNELIZING LINE, CLASS I, 8"	SP 614B WORK ZONE LANE LINE, 6"	SP 614B WORK ZONE EDGE LINE, 6" (WHITE)	SP 614B WORK ZONE EDGE LINE, 6" (YELLOW)	SP 614C REMOVAL OF PAVEMENT MARKINGS	SP 622 32" PORTABLE BARRIER (BRIDGE MOUNTED)	SP 622 32" PORTABLE BARRIER (WITHOUT GLARE SCREEN)	SP 622 32" PORTABLE BARRIER (WITH GLARE SCREEN)	SPECIAL "SNAP" - MILL AND FILL
							EACH	EACH	EACH	EACH	MILE	MILE	MILE	MILE	MILE	FT	MILE	MILE	MILE	MILE	FT	FT	FT	FT
			TO																					
		PHASE 2																						
B3	24-25	56+10		78+50	LEFT			46	46														2240	
B4	24-25	60+70		86+50	LEFT			106		53														2580
I2	24	56+10			LEFT		1																	
Y3	24-25	55+60		65+50	LT & RT										990.00									
		65+50		77+90	LEFT									1040.00					200					
		77+90		88+00	LT & RT										1010.00									
Y4	24-26	51+30		62+00	LEFT										1070.00									
		62+00		83+80	LEFT									1980.00					200					
		83+80		95+50	LEFT										1170.00									
		95+50		111+90	LEFT									1640.00										
CH5	24	55+60		65+50	LT & RT											990								
CH6	25	77+90		88+00	LT & RT											1010								
CH7	24	51+30		62+00	LEFT											1070								
CH8	25	83+80		95+50	LEFT											1170								
W3	23-25	39+10		55+60	LEFT							1650.00												
		55+60		65+50	LT & RT								990.00											
		65+50		77+90	LEFT							1040.00						200						
		77+90		88+00	LT & RT								1010.00											
W4	24-25	51+30		62+00	LEFT								1070.00											
		62+00		83+80	LEFT							1980.00						200						
		83+80		95+50	LEFT								1170.00											
L3	24-25	65+50		77+90	LEFT						1040						200							
L4	24-25	62+00		83+80	LEFT						1980						200							
X8	24	52+80		65+00	LEFT															1220				
X9	25	78+50		93+00	LEFT															1450				
X10	25	78+50		84+00	LEFT															550				
X11	26	103+50		111+90	LEFT															840				
S5	24	52+80		66+70	OUT LT																			1390
S6	24-25	72+15		74+50	OUT LT																			235
S7	25	76+50		93+00	OUT LT																			1650
S8	24	64+00		65+00	IN LT																			100
S9	25	78+50		80+50	IN LT																			200
TOTALS FROM SHEET 17							1	134	28	53	1690	3050	4260	3330	3970	3970	1660	1660	1660	11125	900	1550	2610	4025
TOTALS THIS SHEET							1	152	46	53	3020	4670	4240	4660	4240	4240	400	400	400	4060	0	2240	2580	3575
SUBTOTALS							2	286	74	106	4710	7720	8500	7990	8210	8210	2060	2060	2060	15185	900	3790	5190	7600
TOTALS CARRIED TO MAINTENANCE OF TRAFFIC NOTES								286	74	106										2.88				
TOTALS CARRIED TO GENERAL SUMMARY							2	286	74	106	0.89	1.46	1.61	1.51	1.55	8,210	0.39	0.39	0.39	2.88	900	3,790	5,190	7,600

DESIGN AGENCY
DGL CONSULTING ENGINEERS, LLC
3455 BRIARFIELD BLVD, SUITE E
MAUMEE, OH 43537

NO.	REVISIONS	BY	DATE
1	REVISED STATIONS	SRC	3/26/24
-	-	-	-
-	-	-	-

DESIGNED SRC | CHECKED RJM
DRAWN SRC | IN CHARGE AEH

MAINTENANCE OF TRAFFIC SUBSUMMARY

SANDUSKY COUNTY

M.P. 83.3

PROJECT 43-24-06

DATE: 09/01/23

OHIO TURNPIKE AND INFRASTRUCTURE COMMISSION

71-21-04-MOT SUBSUMMARY.dwg: 3/26/24 - 1:44pm

SHEET NUMBER											ITEM	GRAND TOTAL	UNIT	DESCRIPTION	SEE SHT. NO.
				9	10	11	12	19	67	68					
														TRAFFIC CONTROL	
										115	630	115	FT	GROUND MOUNTED SUPPORT, NO. 3 POST	
										63	630	63	SF	SIGN, FLAT SHEET	
										16	630	16	EACH	SIGN POST REFLECTOR	
										5	630	5	EACH	REMOVAL OF GROUND MOUNTED SIGN AND DISPOSAL	
										5	630	5	EACH	REMOVAL OF GROUND MOUNTED POST SUPPORT AND DISPOSAL	
										1	630	1	EACH	REMOVAL OF GROUND MOUNTED SIGN AND REERECTION	
									4.6		642	4.6	MILE	EDGE LINE, 6", TYPE 1	
									4.4		642	4.4	MILE	LANE LINE, 6", TYPE 1	
									292		SP 621	292	EACH	RAISED PAVEMENT MARKERS	
									1.7		SPECIAL	1.7	MILE	SONIC NAP ALERT PATTERN (SNAP)	
									24		SP 626	24	EACH	BARRIER REFLECTOR, TYPE 1 BIDIRECTIONAL	
									72		642	72	FT	CROSSWALK LINE, 24", TYPE 1	
									29		642	29	FT	STOP LINE, TYPE 1	
									0.2		642	0.2	MILE	CENTERLINE, TYPE 1, DASHED 4"	
									0.1		642	0.1	MILE	EDGE LINE, 4", TYPE 1, WHITE	
									0.3		642	0.3	MILE	LANE LINE, 4"	
									4		642	4	EACH	WORD ON PAVEMENT, 72"	
									185		642	185	FT	TRANSVERSE/DIAGONAL LINE, TYPE 1	
														MAINTENANCE OF TRAFFIC	
								2			614	2	EACH	WORK ZONE IMPACT ATTENUATOR	
					20						614	20	EACH	REPLACEMENT SIGN	
							2				614	2	EACH	WORK ZONE CROSSOVER LIGHTING SYSTEM	
					286						614	286	EACH	BARRIER REFLECTOR, TYPE B (ONE-WAY)	
					74						614	74	EACH	OBJECT MARKER, ONE WAY	
					106						614	106	EACH	OBJECT MARKER, TWO WAY	
						960					614	960	DAY	PORTABLE CHANGEABLE MESSAGE SIGN, AS PER PLAN	11
				3.07				0.89			614	3.96	MILE	WORK ZONE LANE LINE, CLASS I, 6"	
				0.95				1.46			614	2.41	MILE	WORK ZONE EDGE LINE, CLASS I, 6", (WHITE)	
								1.61			614	1.61	MILE	WORK ZONE EDGE LINE, CLASS I, 8", (WHITE)	
				1.06				1.51			614	2.57	MILE	WORK ZONE EDGE LINE, CLASS I, 6", (YELLOW)	
								1.55			614	1.55	MILE	WORK ZONE EDGE LINE, CLASS I, 8", (YELLOW)	
								8,210			614	8,210	FT	WORK ZONE CHANNELIZING LINE, CLASS I, 8"	
								0.39			SP 614B	0.39	MILE	WORK ZONE LANE LINE, 6"	
								0.39			SP 614B	0.39	MILE	WORK ZONE EDGE LINE, 6" (WHITE)	
								0.39			SP 614B	0.39	MILE	WORK ZONE EDGE LINE, 6" (YELLOW)	
					2.88						SP 614C	2.88	MILE	REMOVAL OF PAVEMENT MARKINGS	
				11,310							SP 614ZP	11,310	HRS	ZONE PERSON WITH ZONE VEHICLE	
							4,267				615	4,267	SY	PAVEMENT FOR MAINTAINING TRAFFIC, CLASS A, AS PER PLAN	12
					120						616	120	MGAL	WATER	
					20						SP 621	20	EACH	RAISED PAVEMENT MARKER- STIMSONITE MODEL 101 LPCR	
					20						SP 621	20	EACH	REPLACEMENT PRISMATIC RETRO-REFLECTOR	
					20						SP 621	20	EACH	REPLACEMENT RAISED PAVEMENT MARKER CASTING - STIMSONITE MODEL 101 LPCR	
								900			SP 622	900	FT	PORTABLE BARRIER, 32", (BRIDGE MOUNTED)	
					100			3,790			SP 622	3,890	FT	PORTABLE BARRIER, 32", (WITH GLARE SCREEN)	
								5,190			SP 622	5,190	FT	PORTABLE BARRIER, 32", (WITHOUT GLARE SCREEN)	
						25					SP 626	25	EACH	BARRIER REFLECTOR, TYPE A (WHITE)	
							3,464				SP 626A	3,464	EACH	CONSTRUCTION ZONE MARKER (EACH)	
					48						630	48	SF	SIGNING, MISC.: ADDITIONAL SIGNS WITH SUPPORTS, AS DIRECTED BY THE CHIEF ENGINEER	10
							2.88				642	2.88	MILE	PAVEMENT MARKING, MISC.: FINAL PAVEMENT MARKING PREPARATION	12
								7,600			SPECIAL	7,600	FT	"SNAP" - MILL AND FILL	12
											SPECIAL	LUMP	LS	EXISTING CROSSOVER TO BE CLOSED / RE-OPENED	12

DESIGN AGENCY
DGL CONSULTING ENGINEERS, LLC
3455 BRIARFIELD BLVD. SUITE E
MAUMEE, OH 43537

NO.	REVISIONS	BY	DATE
1	QUANTITY	SRC	3/26/24
-	-	-	-
-	-	-	-

DESIGNED	CHECKED	NO.
GJS	RJM	1
DRAWN	IN CHARGE	-
GJS	AEH	-

GENERAL SUMMARY

SANDUSKY COUNTY

M.P. 83.3

PROJECT 43-24-03

DATE: 9/1/23

OHIO TURNPIKE AND INFRASTRUCTURE COMMISSION

71-21-04-GENERAL_SUMMARY.dwg: 3/26/24 - 1:44pm