SPECIFICATIONS

THE 2019 OHIO DEPARTMENT OF TRANSPORTATION, CONSTRUCTION AND MATERIAL SPECIFICATIONS (CMSL), INCLUDING ALL SUPPLEMENTS THERETO, AND THE OHIO TURNPIKE COMPLETE STANDARD DRAWING SET, CURRENT EDITION, SHALL GOVERN ALL WORKMANSHIP, MATERIALS AND METHODS OF CONSTRUCTION INVOLVED IN THE IMPROVEMENTS SHOWN ON THESE PLANS, EXCEPT AS SUCH SPECIFICATIONS ARE MODIFIED BY THE FOLLOWING SPECIFICATIONS OR BY THE CONSTRUCTION DETAILS SET FORTH HEREIN.

ROUNDING

THE ROUNDING AT SLOPE BREAKPOINTS SHOWN ON THE TYPICAL SECTIONS APPLIES TO ALL CROSS-SECTIONS, EVEN THOUGH OTHERWISE SHOWN.

SURVEYING PARAMETERS

PRIMARY PROJECT CONTROL MONUMENTS GOVERN ALL POSITIONING ON ODOT PROJECTS. SEE THIS SHEET FOR TABLES CONTAINING PROJECT CONTROL INFORMATION.

USE THE FOLLOWING PROJECT CONTROL, VERTICAL POSITIONING, AND HORIZONTAL POSITIONING PARAMETERS FOR ALL SURVEYING:

PROJECT CONTROL
POSITIONING METHOD: ODOT VRS
MONUMENT TYPE: TYPE B

VERTICAL POSITIONING
ORTHOMETRIC HEIGHT DATUM: NAVD 88
GEOID: GEOID 18

HORIZONTAL POSITIONING
REFERENCE FRAME: NAD 83 (2011)
ELLIPSOID: GRS80
MAP PROJECTION: LAMBERT CONFORMAL CONIC
COORDINATE SYSTEM: OHIO STATE PLANE, NORTH ZONE
COMBINED SCALE FACTOR: 1.0000791662
ORIGIN OF COORDINATE SYSTEM: 0,0

USE THE POSITIONING METHODS AND MONUMENT TYPE USED IN THE ORIGINAL SURVEY TO RESTORE ALL MONUMENTS RELATED TO PRIMARY PROJECT CONTROL THAT ARE DAMAGED OR DESTROYED BY CONSTRUCTION ACTIVITIES. RESTORE THE DAMAGED OR DESTROYED MONUMENTS IN ACCORDANCE WITH CMS 623. NO ADDITIONAL PAYMENT WILL BE MADE FOR THE RESTORATION OF MONUMENTS.

UNITS ARE IN U.S. SURVEY FEET.

WORK LIMITS

THE WORK LIMITS SHOWN ON THESE PLANS ARE FOR PHYSICAL CONSTRUCTION ONLY. PROVIDE THE INSTALLATION AND OPERATION OF ALL WORK ZONE TRAFFIC CONTROL AND WORK ZONE TRAFFIC CONTROL DEVICES REQUIRED BY THESE PLANS WHETHER INSIDE OR OUTSIDE THESE WORK LIMITS.

CONNECTION BETWEEN EXISTING AND PROPOSED GUARDRAIL

WHEN IT IS NECESSARY TO SPLICE PROPOSED GUARDRAIL TO EXISTING GUARDRAIL, ONLY THE EXISTING GUARDRAIL SHALL BE CUT, DRILLED, OR PUNCHED. THE CONNECTION SHALL BE MADE
USING A W-BEAM, BEAM SPLICE AS SHOWN IN AASHTO M 180 SPECIFICATION , EXCEPT THE BEAM WASHERS ARE NOT TO BE USED. PAYMENT SHALL BE INCLUDED IN THE CONTRACT PRICE FOR THE RESPECTIVE GUARDRAIL ITEMS.

CONSTRUCTION NOISE

ACTIVITIES AND LAND USES ADJACENT TO THE PROJECT MAY BE ADVERSELY AFFECTED BY CONSTRUCTION NOISE. IN ORDER TO MINIMIZE THE CONSTRUCTION NOISE IMPACTS, ANY POWER-OPERATED EQUIPMENT OR CONSTRUCTION-TYPE DEVICE SHALL NOT BE OPERATED BETWEEN THE HOURS OF 7:00 PM AND 7:00 AM. THIS TIME RESTRICTION DOES NOT APPLY FOR GENERATORS USED TO MAINTAIN OVERNIGHT BYPASS PUMPING AND/OR DEWATERING OPERATIONS. IN ADDITION, ANY SUCH EQUIPMENT SHALL NOT BE OPERATED AT ANY TIME IN SUCH MANNER THAT THE NOISE CREATED SUBSTANTIALLY EXCEEDS THE NOISE CUSTOMARILY AND NECESSARILY ATTENDANT TO THE REASONABLE AND EFFICIENT PERFORMANCE OF SUCH EQUIPMENT.

SAWING PAVEMENT

WHERE NECESSARY TO DISTURB PAVEMENT OR DRIVES, THE PAVEMENT SHALL BE SAWCUT IN NEAT, STRAIGHT LINES. THE COST OF THIS WORK SHALL BE INCLUDED IN THE UNIT BID PRICES FOR FURNISHING AND PLACING ASPHALT CONCRETE.

UTILITIES

LISTED BELOW ARE ALL UTILITIES LOCATED WITHIN THE PROJECT CONSTRUCTION LIMITS TOGETHER WITH THEIR RESPECTIVE OWNERS:

AVON LAKE REGIONAL WATER
201 MILLER ROAD
AVON LAKE, OHIO 44012-1004

AVON LAKE REGIONAL WATER
CARL BUSSE
PHONE: 440-541-8237
EMAIL: CBUSSE@AVONLAKEWATER.ORG

CHARTER COMMUNICATIONS
DAN MCCAFFERTY
8150 DOW CIRCLE
STRONGSVILLE, OHIO 44136
PHONE: 216-555-4262
EMAIL: DANIEL.MCCAFFERTY@CHARTER.COM

CITY OF NORTH RIDGEVILLE
CHRISTINA EAVENSON
7307 AVON BELDEN ROAD
NORTH RIDGEVILLE, OHIO 44039
PHONE: 440-353-0842
EMAIL: CEAVENSON@NRIDGEVILLE.ORG

TC ENERGY
RUSS JOHNSON
589 NORTH STATE ROAD
MEDINA, OHIO 44256
PHONE: 330-721-4163
EMAIL: RUSSELL_JOHNSON@TCENERGY.COM

COLUMBIA GAS OF OHIO
ADAM WOODIE, P.E.
3101 NORTH RIDGE ROAD E
LORAIN, OHIO 44055
PHONE: 440-240-6144
EMAIL: AWOODIE@NISOURCE.COM

EVERSTREAM SOLUTIONS
JOSEPH GIRDLESTONE
1228 EUCLID AVE, SUITE 250
CLEVELAND, OHIO 44115
PHONE: 234-521-2999
EMAIL: JGIRDLESTONE@EVERSTREAM.NET

FRONTIER COMMUNICATIONS
AMY ROTH
3126 NORTH MCCORD
TOLEDO, OHIO 43617
PHONE: 419-841-7281
EMAIL: AMY.L.ROTH@FTR.COM

LUMEN (LEVEL 3)
TRACY L. DZUGAN
MICHIGAN / OHIO EAST
EMAIL: TRACY.L.DZUGAN@LUMEN.COM
TOM TROMBLEY
EMAIL: TOM.TROMBLEY@CENTURYLINK.COM

ODOT DISTRICT 3 TRAFFIC
ANDY GUIDETTI
906 CLARK AVE.
ASHLAND, OHIO 44805
PHONE: 419-207-7184
EMAIL: ANDREW.GUIDETTI@DOT.OHIO.GOV

OHIO EDISON
JEFF HALL
6326 LAKE AVENUE
ELYRIA, OHIO 44035
PHONE: 440-326-3207
EMAIL: HALLJB@FIRSTENERGYCORP.COM

WINDSTREAM OHIO
GEOFF HAMM
560 TERNES AVE.
ELYRIA, OHIO 44035
PHONE: 440-329-4245
EMAIL: GEOFFREY.P.HAMM@WINDSTREAM.COM

REVIEW OF DRAINAGE FACILITIES

PRIOR TO THE START OF WORK AND AGAIN BEFORE FINAL ACCEPTANCE, PERFORM AN INSPECTION WITH REPRESENTATIVES OF THE DEPARTMENT, CONTRACTOR AND LOCALS OF ALL EXISTING DRAINAGE FACILITIES THAT ARE TO REMAIN IN SERVICE WHICH MAY BE AFFECTED BY THE WORK. THE CONDITION OF THE EXISTING CONDUITS AND THEIR APPURTENANCES IS DETERMINED FROM FIELD OBSERVATIONS. RECORDS OF THE INSPECTION ARE MAINTAINED BY THE DEPARTMENT.

CONFIRM ALL EXISTING SEWERS INSPECTED INITIALLY BY THE ABOVE-MENTIONED PARTIES ARE MAINTAINED AND LEFT IN A CONDITION COMPARABLE TO THAT DETERMINED BY THE ORIGINAL INSPECTION. THE CONTRACTOR IS RESPONSIBLE TO CORRECT ANY CHANGE IN THE CONDITION RESULTING FROM THEIR OPERATIONS AS DIRECTED AND APPROVED BY THE ENGINEER.

ITEM SP 606 A - ANCHOR ASSEMBLY, MGS TYPE E

THIS ITEM SHALL CONSIST OF FURNISHING AND INSTALLING ANY OF THE GUARDRAIL END TERMINALS FOR TYPE MGS GUARDRAIL AS LISTED ON ROADWAY ENGINEERING'S WEB PAGE UNDER ROADSIDE SAFETY DEVICES FOR APPROVED GUARDRAIL END TREATMENTS. INSTALLATION SHALL BE AT THE LOCATIONS SPECIFIED IN THE PLANS, IN ACCORDANCE WITH THE
MANUFACTURER'S SPECIFICATIONS.

THE FACE OF THE TYPE E IMPACT HEAD SHALL BE COVERED WITH A SHEET OF TYPE G REFLECTIVE SHEETING, PER CMS 730.19.

REFER TO THE MANUFACTURER'S INSTRUCTIONS REGARDING THE INSTALLATION OF, AND THE GRADING AROUND THE FOUNDATION TUBES AND GROUND STRUT. THE TOP OF ANY
FOUNDATION TUBE SHOULD BE LESS THAN 4 INCHES ABOVE THE GROUND. THE PLACEMENT OF THE FOUNDATION TUBES SHOULD BE AN APPROPRIATE DEPTH BELOW THE LEVEL LINE IN ORDER
TO MAINTAIN THE FINISHED GUARDRAIL HEIGHT OF 31 INCHES FROM THE EDGE OF THE SHOULDER.

ON-SITE GRADING IS REQUIRED IF THE TOP OF THE FOUNDATION TUBES OR TOP OF THE GROUND STRUT DOES PROJECT MORE THAN 4 INCHES ABOVE THE GROUND LINE.

PAYMENT FOR THE ABOVE WORK SHALL BE MADE AT THE UNIT PRICE BID FOR ITEM SP 606 A , ANCHOR ASSEMBLY, MGS TYPE E, EACH, AND SHALL INCLUDE ALL LABOR, TOOLS, EQUIPMENT AND MATERIALS NECESSARY TO CONSTRUCT A COMPLETE AND FUNCTIONAL ANCHOR ASSEMBLY SYSTEM, INCLUDING ALL RELATED TRANSITIONS, REFLECTIVE SHEETING, HARDWARE,
GRADING, EMBANKMENT AND EXCAVATION NOT SEPARATELY SPECIFIED, AS REQUIRED BY THE MANUFACTURER.

ITEM 646 - EPOXY PAVEMENT MARKINGS

PRIOR TO BEGINNING WORK, THE CONTRACTOR SHALL RECORD THE LOCATIONS OF THE EXISTING PAVEMENT MARKINGS TO BE REMOVED FOR MAINTENANCE OF TRAFFIC PURPOSES. AT THE COMPLETION OF THE PROJECT, THE CONTRACTOR SHALL BE RESPONSIBLE FOR REPLACING ALL EXISTING PAVEMENT MARKINGS DAMAGED OR REMOVED DURING THE CONSTRUCTION IN ACCORDANCE WITH CURRENT STANDARDS AND 2023 CMS. THE FOLLOWING ESTIMATED QUANTITIES OF ITEM 646 EPOXY PAVEMENT MARKINGS HAS BEEN PROVIDED AND CARRIED TO THE GENERAL SUMMARY.

OHIO TURNPIKE OVER LORAIN ROAD M.P. 152.3

EDGE LINE, 6" (YELLOW):	2.60	MILE
EDGE LINE, 6" (WHITE):	2.68	MILE
LANE LINE, 6":	5.21	MILE
DOTTED LINE, 6":	2261	FOOT
CHANNELIZING LINE, 12"	945	FOOT

BAGLEY ROAD OVER OHIO TURNPIKE M.P. 152.9

EDGE LINE, 6" (WHITE):	0.25 MILE
CENTER LINE, (DOUBLE YELLOW):	0.12 MILE

ITEM 209 - LINEAR GRADING, AS PER PLAN

THE CONTRACTOR SHALL FOLLOW ODOT CMS FOR ITEM 209 LINEAR GRADING WITHIN THE LIMITS OF THE RESURFACING TO REESTABLISH A SMOOTH GRADED SHOULDER. ANY ADDITIONAL AREA DISTURBED BY THE CONTRACTOR OUTSIDE OF THE PLAN LIMITS SHALL BE REESTABLISHED AT THE CONTRACTOR'S OWN EXPENSE.

RAISED PAVEMENT MARKERS

PRIOR TO BEGINNING WORK, THE CONTRACTOR SHALL RECORD THE LOCATIONS OF THE EXISTING RAISED PAVEMENT MARKINGS TO BE REMOVED WITHIN THE RESURFACING LIMITS. AT THE COMPLETION OF THE PROJECT, THE CONTRACTOR SHALL BE RESPONSIBLE FOR REPLACING THE RAISED PAVEMENT MARKERS. THE FOLLOWING ESTIMATED QUANTITIES FOR THE REMOVAL AND REPLACEMENT OF RAISED PAVMENT MARKERS HAVE BEEN PROVIDED AND CARRIED TO THE GENERAL SUMMARY.

OHIO TURNPIKE OVER LORAIN ROAD M.P. 152.3

ITEM SP 621 - RAISED PAVEMENT MARKER:	54 EACH
ITEM 621 - RAISED PAVEMENT MARKER REMOVED:	54 EACH

SURVEY CONTROL

CENTERLINE CONSTRUCTION REFERENCES AND BENCHMARKS - OHIO TURNPIKE OVER LORAIN ROAD

STATION	OFFSET (FT)	SIDE	NORTHING	EASTING	ELEVATION	DESCRIPTION
			GROUND			
1033+31.08	218.78	RT	624009.415	2108735.339	778.84	IRON PIN SET W/CAP
1033+73.51	207.63	RT	624010.444	2108777.673	778.01	IRON PIN SET W/CAP
1036+32.32	89.62	RT	624057.308	2109052.015	791.02	IRON PIN SET W/CAP
1038+88.51	179.846	LT	624233.962	2109380.689	785.75	IRON PIN SET W/CAP
1038+95.52	64.62	LT	624122.833	2109349.413	796.57	IRON PIN SET W/CAP
1039+05.54	251.29	LT	624295.529	2109421.016	779.82	IRON PIN SET W/CAP
1039+15.26	82.45	RT	623977.574	2109319.119	796.03	IRON PIN SET W/CAP
1040+36.71	64.42	LT	624073.768	2109483.491	799.01	IRON PIN SET W/CAP
1041+50.28	103.71	LT	624068.528	2109605.122	799.37	IRON PIN SET W/CAP
1042+00.74	77.03	RT	623882.051	2109583.948	800.78	IRON PIN SET W/CAP
1042+60.29	398.29	RT	623563.601	2109512.844	789.75	IRON PIN SET W/CAP
1042+61.24	89.98	LT	624012.815	2109704.199	802.50	IRON PIN SET W/CAP
1043+81.08	216.41	LT	624079.485	2109867.526	781.68	IRON PIN SET W/CAP
1044+85.72	71.08	RT	623774.03	2109843.712	804.28	IRON PIN SET W/CAP
1045+68.04	75.95	LT	623870.978	2109981.564	806.17	IRON PIN SET W/CAP
1048+63.40	65.88	RT	623608.679	2110178.217	806.96	IRON PIN SET W/CAP
1048+67.42	73.24	LT	623728.385	2110249.203	807.89	IRON PIN SET W/CAP

CENTERLINE CONSTRUCTION REFERENCES AND BENCHMARKS - BAGLEY ROAD OVER OHIO TURNPIKE

STATION	OFFSET (FT)	SIDE	NORTHING	EASTING	ELEVATION	DESCRIPTION
			GROUND			
8+45.19	19.27	RT	621527.54	2111960.87	784.15	IRON PIN SET W/CAP
12+54.51	15.38	RT	621618.45	2112359.99	797.22	IRON PIN SET W/CAP
14+66.65	72.04	RT	621608.45	2112579.34	782.58	IRON PIN SET W/CAP
17+24.41	15.04	LT	621748.63	2112812.52	798.22	IRON PIN SET W/CAP
20+01.91	16.53	LT	621809.4	2113083.29	788.08	IRON PIN SET W/CAP

MAINTENANCE OF TRAFFIC SEQUENCE

THESE PLANS ARE BASED ON THE FOLLOWING SUGGESTED SEQUENCE OF CONSTRUCTION.

CONSTRUCTION PHASING AND TIME OF COMPLETION OF WORK SHALL BE ACCOMPLISHED IN ACCORDANCE WITH SP 103.

TRAFFIC SHALL BE MAINTAINED AS DETAILED ON OTIC STANDARD DRAWINGS TCR-1, TCR-2, AND TCR-12. BOTH PAIRS OF MAIN LINE BRIDGES SHALL BE INCLUDED WITHIN A SINGLE CONTINUOUS CONSTRUCTION ZONE.

2024 CONSTRUCTION: PHASES 1 AND 2 INCLUDING BAGLEY ROAD

PHASE 1 - EASTBOUND CONSTRUCTION - OUTSIDE LANES

THIS PHASE SHALL CONSIST OF CONSTRUCTING THE OUTSIDE PORTIONS OF THE STRUCTURES AND THE ROADWAY PAVEMENT RESURFACING ON THE EASTBOUND SIDE. THE CONTRACTOR SHALL MAINTAIN TWO (2) LANES OF EASTBOUND TRAFFIC.

- CONDUCT "SNAP" REMOVAL SHOULDER MILLING AND PAVEMENT REPAIR ALONG THE MEDIAN SHOULDER. REMOVE EXISTING RAISED PAVEMENT MARKERS WHICH CONFLICT WITH WORK ZONES.
- ESTABLISH DETOUR FOR PHASE 1 RAMP CLOSURE PLAN FOUND ON SHEET 28. ONLY THE SIGNS REQUIRED FOR EASTBOUND ENTRANCE RAMP ARE REQUIRED FOR PHASE 1.
- ESTABLISH A STANDARD SINGLE LANE CLOSURE PER TCR-2 FOR THE OUTSIDE LANE IN EASTBOUND DIRECTION TO REDUCE TRAFFIC INTO TWO LANES.
- ESTABLISH A DOUBLE LANE SHIFT PER TCR-12 FOR EASTBOUND DIRECTION THAT ALLOWS SUFFICIENT CONSTRUCTION WORK ZONE TO COMPLETE THE WORK TO THE LIMITS SHOWN ON THE PLANS. PROVIDE PORTABLE BARRIERS TO PROTECT THE WORK ZONE AS SHOWN.
- MAINTAIN EASTBOUND EXIT 152 PER TCR-9.1. CLOSE EASTBOUND ENTRANCE RAMP 152.

PHASE 2 - EASTBOUND CONSTRUCTION - INSIDE LANES

THIS PHASE SHALL CONSIST OF CONSTRUCTING THE INSIDE PORTIONS OF THE STRUCTURES AND THE ROADWAY PAVEMENT RESURFACING ON THE EASTBOUND SIDE. THE CONTRACTOR SHALL MAINTAIN TWO (2) LANES OF EASTBOUND TRAFFIC.

- REMOVE DETOUR FOR PHASE 1 RAMP CLOSURE AND OPEN RAMPS TO TRAFFIC.
- CONDUCT "SNAP" REMOVAL SHOULDER MILLING AND PAVEMENT REPAIR ALONG THE OUTSIDE SHOULDER. REMOVE EXISTING RAISED PAVEMENT MARKERS WHICH CONFLICT WITH WORK ZONES.
- ESTABLISH A STANDARD SINGLE LANE CLOSURE PER TCR-2 FOR THE INSIDE LANE IN EASTBOUND DIRECTION TO REDUCE TRAFFIC INTO TWO LANES.
- ESTABLISH A DOUBLE LANE SHIFT PER TCR-12 FOR EASTBOUND DIRECTION THAT ALLOWS SUFFICIENT CONSTRUCTION WORK ZONE TO COMPLETE THE WORK TO THE LIMITS SHOWN ON THE PLANS. PROVIDE PORTABLE BARRIERS TO PROTECT THE WORK ZONE AS SHOWN.
- MAINTAIN EASTBOUND EXIT 152 AND EASTBOUND ENTRANCE RAMP 152 PER TCR-9.1. CLOSE .
- ESTABLISH SHORT TERM SHOULDER CLOSURES PER TCR-9 TO INSTALL SNAPS IN COMPLETED PAVEMENT.
- COMPLETE PROPOSED TRAFFIC CONTROL INSTALLATIONS PER TCR-11PS.

2025 CONSTRUCTION: PHASES 3 AND 4

PHASE 3 - WESTBOUND CONSTRUCTION - OUTSIDE LANES

THIS PHASE SHALL CONSIST OF CONSTRUCTING THE OUTSIDE PORTIONS OF THE STRUCTURES AND THE ROADWAY PAVEMENT RESURFACING ON THE WESTBOUND SIDE. THE CONTRACTOR SHALL MAINTAIN TWO (2) LANES OF WESTBOUND TRAFFIC.

- CONDUCT "SNAP" REMOVAL SHOULDER MILLING AND PAVEMENT REPAIR ALONG THE MEDIAN SHOULDER. REMOVE EXISTING RAISED PAVEMENT MARKERS WHICH CONFLICT WITH WORK ZONES.
- ESTABLISH DETOUR FOR PHASE 3 RAMP CLOSURE PLAN FOUND ON SHEET 28. ONLY THE SIGNS REQUIRED FOR WESTBOUND EXIT RAMP ARE REQUIRED FOR PHASE 3.
- ESTABLISH A STANDARD SINGLE LANE CLOSURE PER TCR-2 FOR THE OUTSIDE LANE IN WESTBOUND DIRECTION TO REDUCE TRAFFIC INTO TWO LANES.
- ESTABLISH A DOUBLE LANE SHIFT PER TCR-12 FOR WESTBOUND DIRECTION THAT ALLOWS SUFFICIENT CONSTRUCTION WORK ZONE TO COMPLETE THE WORK TO THE LIMITS SHOWN ON THE PLANS. PROVIDE PORTABLE BARRIERS TO PROTECT THE WORK ZONE AS SHOWN.
- MAINTAIN WESTBOUND ENTRANCE 152 PER TCR-9.1. CLOSE WESTBOUND EXIT RAMP 152.

PHASE 4 - WESTBOUND CONSTRUCTION - INSIDE LANES

THIS PHASE SHALL CONSIST OF CONSTRUCTING THE INSIDE PORTIONS OF THE STRUCTURES AND THE ROADWAY PAVEMENT RESURFACING ON THE WESTBOUND SIDE. THE CONTRACTOR SHALL MAINTAIN TWO (2) LANES OF WESTBOUND TRAFFIC.

- REMOVE DETOUR FOR PHASE 3 RAMP CLOSURE AND OPEN RAMPS TO TRAFFIC.
- CONDUCT "SNAP" REMOVAL SHOULDER MILLING AND PAVEMENT REPAIR ALONG THE OUTSIDE SHOULDER. REMOVE EXISTING RAISED PAVEMENT MARKERS WHICH CONFLICT WITH WORK ZONES.
- ESTABLISH A STANDARD SINGLE LANE CLOSURE PER TCR-2 FOR THE INSIDE LANE IN EASTBOUND DIRECTION TO REDUCE TRAFFIC INTO TWO LANES.
- ESTABLISH A DOUBLE LANE SHIFT PER TCR-12 FOR EASTBOUND DIRECTION THAT ALLOWS SUFFICIENT CONSTRUCTION WORK ZONE TO COMPLETE THE WORK TO THE LIMITS SHOWN ON THE PLANS. PROVIDE PORTABLE BARRIERS TO PROTECT THE WORK ZONE AS SHOWN.
- MAINTAIN WESTBOUND EXIT 152 AND WESTBOUND ENTRANCE RAMP 152 PER TCR-9.1.
- ESTABLISH SHORT TERM SHOULDER CLOSURES PER TCR-9 TO INSTALL SNAPS IN COMPLETED PAVEMENT.
- COMPLETE PROPOSED TRAFFIC CONTROL INSTALLATIONS PER TCR-11PS.

INTERIM MAINTENANCE OF TRAFFIC PHASES AND OPERATIONS

THE DETAILED MAINTENANCE OF TRAFFIC PLANS PRESENTED ON THE FOLLOWING SHEETS REFLECT MAJOR PHASES OF CONSTRUCTION REQUIRED TO COMPLETE THE PROJECT. QUANTITIES FOR ITEMS PAID SEPARATELY FOR THESE MAJOR PHASES ARE INCLUDED IN THE PLANS.

THE CONTRACTOR WILL BE REQUIRED TO PERFORM WORK IN ORDER TO ESTABLISH OR TRANSITION INTO THESE MAJOR PHASES. THIS WORK SHALL BE CONSIDERED INTERIM MAINTENANCE OF TRAFFIC PHASES. THE CONTRACTOR SHALL BE RESPONSIBLE FOR ALL LABOR, MATERIALS, EQUIPMENT AND TRAFFIC CONTROL DEVICES (INCLUDING WORK ZONE IMPACT ATTENUATORS) REQUIRED TO ESTABLISH AND REMOVE THE MAJOR PHASES OF CONSTRUCTION.

PAYMENT FOR THE WORK DESCRIBED ABOVE FOR THE INTERIM MAINTENANCE OF TRAFFIC PHASES SHALL BE INCLUDED IN THE LUMP SUM UNIT PRICE FOR ITEM SP 614, MAINTAINING TRAFFIC AND SHALL INCLUDE ALL REQUIRED LABOR, EQUIPMENT, MATERIALS AND INCIDENTALS.

MAINTAINING TRAFFIC

GENERALLY, THE CONTRACTOR SHALL CONDUCT OPERATIONS AS TO COMPLETE THE PROPOSED IMPROVEMENT WITH A MINIMUM OF HAZARD, DELAY AND INCONVENIENCE TO THE MOTORISTS USING THE HIGHWAY AFFECTED BY THE WORK DONE UNDER THIS CONTRACT.

THE CONTRACTORS RESPONSIBILITY TO THE SAFETY OF THE MOTORING PUBLIC WHILE PERFORMING THE REQUIREMENTS OF THE CONTRACT SHALL BE IN ACCORDANCE WITH THESE TEMPORARY TRAFFIC CONTROL PLANS, THE SPECIFICATIONS AND SPECIAL PROVISIONS, THE CURRENT EDITION, LATEST REVISION OF THE "OHIO MANUAL OF UNIFORM TRAFFIC CONTROL DEVICES" (OMUTCD) AND "TEMPORARY TRAFFIC CONTROL ON THE TURNPIKE", LATEST REVISION. IN ADDITION TO THE CONSTRUCTION AND MATERIAL SPECIFICATIONS, THE CONTRACTOR SHALL FURNISH, ERECT, MAINTAIN, AND SUBSEQUENTLY REMOVE ALL TRAFFIC CONTROL DEVICES AS PER SP 614 MAINTAINING TRAFFIC, INCLUDING BARRICADES AND SIGNS IN ACCORDANCE WITH THE OHIO DEPARTMENT OF TRANSPORTATION (ODOT) STANDARD CONSTRUCTION DRAWINGS AND THE OMUTCD.

IN ADDITION, THE FOLLOWING SPECIFIC PROVISIONS ARE MANDATORY:

I. NOTIFICATION

SINCE FUNCTIONAL TRAFFIC CONTROL IS A CONCERN ON ANY PROJECT, IT IS ESSENTIAL THAT THE MOTORING PUBLIC BE ADEQUATELY FOREWARNED OF FUTURE LANE CLOSURES AND/OR TRAFFIC CONSTRICTIONS.

THE CONTRACTOR SHALL SUBMIT A WRITTEN SCHEDULE INDICATING THE LOCATIONS AND DATES OF THE LANE CLOSURES TO THE ENGINEER, OTIC MARKETING AND COMMUNICATIONS OFFICE AND THE FOLLOWING LOCAL AUTHORITIES AT LEAST TWENTY-ONE (21) DAYS PRIOR TO THE START OF CONSTRUCTION. THE CONTRACTOR MUST ALSO NOTIFY THEM AT LEAST SEVENTY-TWO (72) HOURS BEFORE IMPLEMENTING ANY SUBSTANTIAL CHANGE IN TRAFFIC PATTERNS.

AGENCY/ENTITY	PHONE
LORAIN COUNTY SHERIFF	440-329-3710
LORAIN COUNTY ENGINEER	440-329-5584
NORTH RIDGEVILLE POLICE DEPARTMENT	440-327-2191
NORTH RIDGEVILLE FIRE DEPARTMENT	440-327-5311
NORTH RIDGEVILLE ENGINEERING DEPARTMENT	440-353-0842
NORTH RIDGEVILLE SCHOOL DISTRICT	440-327-4444

II. LANE CLOSURE

ALL LANE CLOSURES SHALL BE IN ACCORDANCE WITH THE OMUTCD AND APPLICABLE STANDARD CONSTRUCTION DRAWINGS.

THE OHIO TURNPIKE AND INFRASTRUCTURE COMMISSION (OTIC) TEMPORARY TRAFFIC CONTROL PHASE DATES, LANE REDUCTION TIME LIMITATIONS, AND LIQUIDATED DAMAGE CLAUSES ARE CONTAINED IN THE FOLLOWING SPECIAL PROVISIONS:

SP 103, CONSTRUCTION PHASING AND TIME OF COMPLETION
SP 104, ACCESS TO TURNPIKE AND RESTRICTIONS
SP 107, TIME OF ESSENCE - LIQUIDATED DAMAGES

III. MAINTENANCE OF TRAFFIC SYSTEMS

A. WHEN REQUIRED

WHENEVER ANY PART OF THE TRAVELED SURFACE IS BEING WORKED UPON OR IS OTHERWISE NOT SUITABLE FOR SAFE AND CONVENIENT USE BY VEHICLES, TRAFFIC CONTROL DEVICES SUFFICIENT TO PROTECT SUCH AREAS TO ASSURE THE SAFE AND CONVENIENT PASSAGE OF VEHICULAR TRAFFIC SHALL BE INSTALLED AND MAINTAINED. SUCH TRAFFIC CONTROL DEVICES AND THE MANNER IN WHICH THEY ARE USED SHALL BE CONSISTENT WITH THESE PLANS AND THE OMUTCD. THE TRAFFIC CONTROL DEVICE SYSTEM SHALL CONSTITUTE THE MINIMUM PROVISIONS FOR TRAFFIC CONTROL FOR EACH PARTICULAR SITUATION. WHENEVER THE CHIEF ENGINEER DEEMS IT NECESSARY, ESPECIALLY WHERE A GRADE, CURVE, OR MERGE CONDITIONS EXISTS, HE/SHE MAY DIRECT THAT ADDITIONAL OR ALTERNATIVE DEVICES BE USED.

B. CONDITIONS

DURING ALL PARTS OF THIS PROJECT, FLAGGERS, SIGNING, BARRICADES, FLASHING ARROWS, ETC. SHALL BE LOCATED AS INDICATED IN THE OMUTCD OR AS SHOWN IN THE STANDARD CONSTRUCTION DRAWINGS. TWO-WAY TRAFFIC SHALL BE MAINTAINED AT ALL TIMES.

C. ADVANCE WARNING SIGNS

ALL ADVANCE WARNING SIGNS FOR ANY CONDITION WHICH RESTRICTS TRAFFIC SHALL BE ERECTED BEFORE ANY SUCH RESTRICTION IS PUT INTO EFFECT. ALL SUCH SIGNS SHALL BE COVERED OR REMOVED FROM VIEW OF TRAFFIC WHENEVER THEY ARE NOT APPLICABLE.

D. FLASHING ARROW REQUIREMENT

WHENEVER ANY PART OF THE TRAVELED SURFACE IS CLOSED, MOTORISTS SHALL BE WARNED AND DIRECTED BY THE CONTRACTOR THROUGH THE USE OF ONE FLASHING ARROW FOR EACH LANE CLOSED. ADDITIONALLY, THE PROVISIONS SET FORTH IN THE OMUTCD AND THE APPLICABLE STANDARD CONSTRUCTION DRAWINGS SHALL BE MET.

E. FLAGGERS

THE CONTRACTOR SHALL FURNISH ADDITIONAL FLAGGERS AS DIRECTED BY THE CHIEF ENGINEER.

F. MAINTENANCE OF TRAFFIC CONTROL ZONES

THE CONTRACTOR SHALL BE RESPONSIBLE TO MAINTAIN THE SIGNS, DRUMS AND TEMPORARY PAVEMENT MARKINGS AT THE LOCATIONS DETAILED IN THE PLANS OR SPECIFIED IN THE STANDARD DRAWINGS. THE CONTRACTOR SHALL IMMEDIATELY CORRECT ANY DEFICIENCY IN TRAFFIC ZONE ALIGNMENT, EQUIPMENT, NUMBER OF DEVICES OR PROCEDURE OF FLAG PERSONS WHICH IS BROUGHT TO THEIR ATTENTION BY THE CHIEF ENGINEER.

G. FAILURE TO COMPLY

IF THERE IS ANY FAILURE TO COMPLY WITH PROVISIONS FOR TRAFFIC CONTROL SET OUT IN THESE PLANS AND NOTES, OR WITH THE PROVISIONS OF THE OMUTCD, THE HIGHWAY IN THE VICINITY OF THE WORK AREA SHALL NOT BE CONSIDERED IN A CONDITION FOR THE SAFE AND CONVENIENT USE BY THE TRAVELING PUBLIC. ANY FAILURE TO KEEP THE HIGHWAY IN THE VICINITY OF THE WORK AREA, IN A CONDITION FOR THE SAFE AND CONVENIENT USE BY THE TRAVELING PUBLIC, SHALL BE CONSIDERED A BREACH OF THIS CONTRACT. WORK SHALL BE SUSPENDED UNTIL THE CONTRACTOR COMPLIES WITH THE PROVISIONS OF THE AFOREMENTIONED ITEMS.

IV. MAINTENANCE OF TRAFFIC MATERIALS

A. SIGNS

SIGN DIMENSIONS AND SPECIFICATIONS, INCLUDING LETTER SIZES SHALL BE AS PROVIDED IN THE OMUTCD, OR IN DESIGN DRAWINGS PROVIDED BY THE COMMISSION. THE SIGNS SHALL BE SUBJECT TO APPROVAL OF THE CHIEF ENGINEER PRIOR TO THE START OF THE PROJECT.

B. REMOVAL OF PAVEMENT MARKINGS

ALL PAVEMENT MARKINGS WHICH ARE IN CONFLICT WITH THE PROPOSED MAINTENANCE OF TRAFFIC PAVEMENT MARKINGS ARE TO BE REMOVED AS PER SP 614C - REMOVAL OF PAVEMENT MARKING.

REMOVAL OF EXISTING CONFLICTING PAVEMENT MARKINGS SHALL BE ACCOMPLISHED BY EITHER GRINDING OR WATER BLAST AS APPROVED BY THE CHIEF ENGINEER, IN ACCORDANCE WITH SP 614C.

BLACKOUT TAPE CAN BE USED PER SP 614A AND CMS 614.

MEASUREMENT OF THIS ITEM SHALL BE IN ACCORDANCE WITH SP 614C AND SHALL INCLUDE ALL LABOR, MATERIALS, EQUIPMENT, AND INCIDENTALS NECESSARY TO REMOVE CONFLICTING PAVEMENT MARKINGS TO THE SATISFACTION OF THE CHIEF ENGINEER.

THE FOLLOW QUANTITY HAS BEEN CARRIED TO THE GENERAL SUMMARY TO BE UTILIZED AS DIRECTED BY THE CHIEF ENGINEER.

SP 614C - REMOVAL OF PAVEMENT MARKING 7 MILES

C. GUARDRAIL DELINEATION

GUARDRAIL DELINEATION SHALL BE PER SP 626 EXCEPT THAT PAYMENT FOR GUARDRAIL DELINEATION SHALL BE INCLUDED WITH ITEM SP 614 MAINTAINING TRAFFIC. SUCH PAYMENT SHALL INCLUDE PROVIDING, INSTALLING, MAINTAINING, REPLACING DAMAGED DELINEATORS AND REMOVING, AS SPECIFIED, FOR THE ABOVE SAID GUARDRAIL DELINEATION.

D. PORTABLE BARRIERS

ALL PORTABLE BARRIERS SHOWN ON THE PLANS FOR MAINLINE TEMPORARY TRAFFIC CONTROL WILL BE AS PER ITEM SP 622, INCLUDING TYPE AND INSTALLATION OF GLARE SCREENS AND BARRIER DELINEATORS. SEE OTIC STANDARD DRAWING TCR-14 FOR ADDITIONAL BARRIER DELINEATOR DETAILS AND PLACEMENT REQUIREMENTS. THE SAME BARRIER CAN BE USED FOR THE VARIOUS PHASES. THE COST FOR TRANSPORTING, INSTALLING, MAINTAINING, REMOVING, STORING, AND RE-SETTING THE PORTABLE BARRIERS FOR EACH PHASE SHALL BE INCLUDED IN THE ORIGINAL UNIT COST OF SUPPLYING THE BARRIER FOR ITEM SP 622.

ALL COSTS ASSOCIATED WITH BARRIER DELINEATORS AND GLARE SCREENS, INCLUDING TRANSPORTING, INSTALLING, MAINTAINING, REMOVING, STORING, AND RE-SETTING THROUGHOUT THE CONTRACT SHALL ALSO BE INCLUDED IN THE ORIGINAL UNIT COST OF SUPPLYING THE BARRIER FOR ITEM SP 622.

THE CONTRACTOR SHALL REPLACE ANY DAMAGED PORTABLE BARRIER WITHIN 24 HOURS OF A DAMAGING IMPACT.

E. WORK ZONE DELINEATION

WORK ZONE DELINEATION WILL BE REQUIRED FOR THE LANE SHIFTS IN EACH PHASE AND SHALL BE IN ACCORDANCE WITH PERTINENT SECTIONS OF THE OMUTCD, THE STANDARD CONSTRUCTION DRAWINGS, AND ODOT CMS SECTION 621. CONSTRUCTION ZONE MARKERS WILL BE REQUIRED FOR THE SHIFTS. THE REQUIREMENTS, LAYOUT AND SPACING OF THE CONSTRUCTION ZONE MARKERS SHALL BE IN ACCORDANCE WITH OTIC STANDARD DRAWING TCR-12.

F. PAYMENT

ALL WORK AND TRAFFIC CONTROL DEVICES SHALL BE IN ACCORDANCE WITH SP 614 AND APPLICABLE PORTIONS OF THE OTIC STANDARD DRAWINGS, ODOT STANDARD CONSTRUCTION DRAWINGS, ODOT CONSTRUCTION & MATERIAL SPECIFICATION (C&MS) AND OTHER APPLICABLE PORTIONS OF THE SPECIFICATIONS, AS WELL AS THE OMUTCD. PAYMENT FOR ALL LABOR, EQUIPMENT, AND MATERIALS SHALL BE INCLUDED IN THE LUMP SUM CONTRACT PRICE FOR SP 614 MAINTAINING TRAFFIC, UNLESS SEPARATELY ITEMIZED IN THE PLAN.

DESIGN AGENCY
EUTHENICS
8235 Mohawk Dr. | Cleveland, OH 44138

NO.	REVISIONS	BY	DATE
1	ADDENDUM 2	MRC	0109
-	-	-	-
-	-	-	-

DESIGNED	CHECKED
MRC	MRC
DRAWN	IN CHARGE
TDP	ARP

MAINTENANCE OF TRAFFIC NOTES

PROJECT 43-24-07
DATE: 11/17/23

OHIO TURNPIKE AND INFRASTRUCTURE COMMISSION

NOTES:

1. ALL TRAFFIC CONTROL DEVICES SHALL CONFORM TO THE CURRENT EDITION OF THE "OHIO MANUAL OF UNIFORM TRAFFIC CONTROL DEVICES" (OMUTCD).
2. THE CONTRACTOR SHALL FURNISH, ERECT, MAINTAIN, AND SUBSEQUENTLY REMOVE ALL BARRICADES, SIGNS, SIGN SUPPORTS, AND INCIDENTALS RELATED TO THE PHASE 1 EASTBOUND TURNPIKE ENTRANCE DETOUR AND PHASE 3 WESTBOUND EXIT RAMP DETOUR AS SHOWN ON THIS SHEET.
3. PAYMENT FOR ALL LABOR, EQUIPMENT, AND MATERIALS SHALL BE CONSIDERED INCIDENTAL TO SP 614 - MAINTAINING TRAFFIC UNLESS ITEMIZED SEPARATELY.
4. THE CONTRACTOR SHALL COVER OR REMOVE EXISTING CONFLICTING SIGNING AND/OR PAVEMENT MARKING PRIOR TO CONSTRUCTION. CONFLICTING PAVEMENT MARKINGS SHALL BE REMOVED UNLESS COVERED WITH NEW PAINT.
5. ROAD CLOSURE USING TYPE III BARRICADES, INCLUDING ADVANCE WARNING SIGNS, SHALL BE SET AS SHOWN ON ODOT STANDARD CONSTRUCTION DRAWING MT-101.60.
6. SEE SHEET 7 FOR MAINTENANCE OF TRAFFIC GENERAL NOTES AND INFORMATION.
7. SEE SHEET 8 FOR NOTICE OF CLOSURE SIGN INFORMATION.
8. THE CONTRACTOR WILL OBTAIN A PERMIT FROM ODOT TO WORK WITHIN THE INTERSTATE 80, INTERSTATE 71, AND INTERSTATE 480 RIGHT OF WAY. THE CONTRACTOR SHALL COMPLY WITH ALL REQUIREMENTS OF THE PERMIT, THE ODOT STANDARD CONSTRUCTION DRAWINGS AND THE TEMPORARY TRAFFIC CONTROL PLANS. THE CONTRACTOR SHALL PROVIDE 18 DAYS ADVANCED NOTICE PRIOR TO THE COMMENCEMENT OF WORK.

LEGEND:

- * 500' FROM INTERSECTION
- SIGN MOUNTED ON POST
- SIGN MOUNTED ON TYPE III BARRICADE
- WORK AREA
- TRAFFIC FLOW
- DETOUR ROUTE

NO.	REVISIONS	BY	DATE
2	ADDENDUM 2	TWG	01/10
-	-	-	-
-	-	-	-
-	-	-	-

DESIGNED	CHECKED
WCS	TWG
DRAWN	IN CHARGE
WCS	TWG

DESIGN AGENCY
CARPENTER MARTY Transportation
801 CROSSPOINTE DRIVE - COLUMBUS, OH 43230
614.882.1211 - WWW.CARPENTERMARTY.COM

OHIO TURNPIKE

MAINTENANCE OF TRAFFIC - RAMP DETOUR PLAN
OHIO TURNPIKE OVER LORAIN ROAD

PROJECT 43-24-07
DATE: 11/17/23

OHIO TURNPIKE AND INFRASTRUCTURE COMMISSION

OHIO TURNPIKE

ESTIMATED QUANTITIES

ITEM	TOTAL	UNIT	ITEM DESCRIPTION	GENERAL		
			GENERAL (PART A AND PART B)			
IB.ART.6		LUMP SUM	PREMIUM FOR CONTRACT PERFORMANCE BOND AND PAYMENT BOND	LUMP SUM		
SP 614		LUMP SUM	MAINTAINING TRAFFIC	LUMP SUM		
SP 619		LUMP SUM	FIELD OFFICE	LUMP SUM		
SP 623		LUMP SUM	CONSTRUCTION LAYOUT SURVEY	LUMP SUM		
624		LUMP SUM	MOBILIZATION	LUMP SUM		
					OHIO TURNPIKE OVER LORAIN ROAD M.P. 152.3	BAGLEY ROAD OVER OHIO TURNPIKE M.P. 152.9
			ROADWAY			
201		LUMP SUM	CLEARING GRUBBING	LUMP SUM		
202	1239	SQ. YD.	PAVEMENT REMOVED		877	362
202	666	SQ. YD.	APPROACH SLAB REMOVED		519	147
202	925	FOOT	GUARDRAIL REMOVED		150	775
202	8	EACH	BRIDGE TERMINAL ASSEMBLY REMOVED		4	4
202	246	FOOT	CURB REMOVED		165	81
203	275	CU. YD.	EMBANKMENT		6	269
203	159	CU. YD.	EXCAVATION			159
204	2082	SQ. YD.	SUBGRADE COMPACTION		1426	656
209	6	STA	LINEAR GRADING, AS PER PLAN		6	
251	1000	SQ. YD.	PARTIAL DEPTH PAVEMENT REPAIR		1000	
254	6297	SQ. YD.	PAVEMENT PLANING, ASPHALT CONCRETE (AVERAGE DEPTH=3")		5624	673
255	1000	SQ. YD.	FULL DEPTH PAVEMENT REMOVAL AND RIGID REPLACEMENT		1000	
255	1000	SQ. YD.	FULL DEPTH PAVEMENT REMOVAL AND RIGID REPLACEMENT (USING RAPID REPAIR CONCRETE MIX MATERIAL)		1000	
255	2000	FOOT	FULL DEPTH PAVEMENT SAWING		2000	
301	51	CU. YD.	ASPHALT CONCRETE BASE			51
SP 302	244	CU. YD.	ASPHALT CONCRETE BASE, PG64-22 (2 EQUAL LIFTS)		244	
304	91	CU. YD.	AGGREGATE BASE			91
SP 304	239	CU. YD.	AGGREGATE BASE		239	
SP 402	482	CU. YD.	ASPHALT CONCRETE INTERMEDIATE COURSE , PG76-22 (FR)		482	
SP 404	226	CU. YD.	ASPHALT CONCRETE SURFACE COURSE, USING CRUSHED SLAG, PG76-22 (FR)		226	
407	1090	GAL.	NON-TRACKING TACK COAT		949	141
441	73	CU. YD.	ASPHALT CONCRETE INTERMEDIATE COURSE, TYPE 2, PG64-22 (448)			73
441	35	CU. YD.	ASPHALT CONCRETE SURFACE COURSE, TYPE 1, PG64-22 (448)			35
526	80	FOOT	TYPE A INSTALLATION			80
606	675	FOOT	GUARDRAIL, TYPE MGS WITH LONG STEEL POSTS		100	575
606	6	EACH	MGS BRIDGE TERMINAL ASSEMBLY, TYPE 1		2	4
606	2	EACH	MGS BRIDGE TERMINAL ASSEMBLY, TYPE 2		2	
SP 606A	2	EACH	ANCHOR ASSEMBLY, MGS TYPE E			2
609	246	FOOT	CURB, TYPE 4-C		165	81
SP 611	6	EACH	CATCH BASIN ADJUSTED TO GRADE		6	
SP 611	4	EACH	CATCH BASIN RECONSTRUCTED TO GRADE			4
SP 611	1	EACH	MANHOLE ADJUSTED TO GRADE		1	
614	1000	DAYS	PORTABLE CHANGEABLE MESSAGE SIGN, AS PER PLAN		1000	
614	100	EACH	REPLACEMENT DRUM		100	
614	20	EACH	REPLACEMENT SIGN		20	
614	900	HOUR	LAW ENFORCEMENT OFFICER WITH PATROL CAR FOR ASSISTANCE		120	780
614	2.21	MILE	WORK ZONE LANE LINE, CLASS I, 6", 642 PAINT		2.21	
614	2.94	MILE	WORK ZONE EDGE LINE, CLASS I, 6", 642 PAINT (YELLOW)		2.94	
614	3.08	MILE	WORK ZONE EDGE LINE, CLASS I, 6", 642 PAINT (WHITE)		3.08	
614	2994	FOOT	WORK ZONE DOTTED LINE, CLASS I, 4", 642 PAINT (WHITE)		2994	
614	1.86	MILE	WORK ZONE EDGE LINE, CLASS I, 8", 642 PAINT (YELLOW)		1.86	
614	1.86	MILE	WORK ZONE EDGE LINE, CLASS I, 8", 642 PAINT (WHITE)		1.86	
614	12729	FOOT	WORK ZONE CHANNELIZING LINE, CLASS I, 8", 642 PAINT		12729	
SP 614B	0.21	MILE	WORK ZONE WHITE EDGE LINE, 6 INCH		0.21	
SP 614B	0.22	MILE	WORK ZONE YELLOW EDGE LINE, 6 INCH		0.22	
SP 614B	0.2	MILE	WORK ZONE LANE LINE, 6 INCH		0.20	
SP 614B	0.07	MILE	WORK ZONE DOTTED LINE, 4 INCH		0.07	
SP 614B	0.06	MILE	WORK ZONE WHITE EDGE LINE, 8 INCH		0.06	
SP 614B	0.06	MILE	WORK ZONE YELLOW EDGE LINE, 8 INCH		0.06	
SP 614B	0.1	MILE	WORK ZONE CHANNELIZING LINE, 8 INCH		0.1	
SP 614C	7	MILE	REMOVAL OF PAVEMENT MARKING		7	
SP 614ZP	9600	HOURS	ZONE PERSON WITH ZONE VEHICLE		9600	
SP 621	54	EACH	RAISED PAVEMENT MARKER		54	
621	54	EACH	RASIED PAVEMENT MARKER REMOVED		54	
625	580	FOOT	CONDUIT, 2", 725.051			580
625	438	FOOT	CONDUIT, 4", 725.051		438	
SP 626A	3884	EACH	CONSTRUCTION ZONE MARKER		3884	
SP 627	34	CU. YD.	STONE SHOULDER PROTECTION (WITH GUARDRAIL) (T = 3")		34	
630	1	EACH	REMOVAL OF GROUND MOUNTED SIGN AND DISPOSAL			1
630	1	EACH	REMOVAL OF GROUND MOUNTED SUPPORT AND DISPOSAL			1
646	2.60	MILE	EDGE LINE, 6" (YELLOW)		2.60	
646	2.93	MILE	EDGE LINE, 6" (WHITE)		2.68	0.25
646	5.21	MILE	LANE LINE, 6"		5.21	
646	2261	FOOT	DOTTED LINE, 6"		2261	
646	0.12	MILE	CENTER LINE, (DOUBLE YELLOW)			0.12
646	945	FOOT	CHANNELIZING LINE, 12"		945	
659	996	SQ. YD.	SEEDING AND MULCHING		94	902
659	112	CU. YD.	TOPSOIL		11	101
832	10000	EACH	EROSION CONTROL		7000	3000
SPECIAL	3.84	MILE	SONIC NAP ALERT PATTERN (SNAP)		3.84	
SPECIAL	4500	SQ. YD.	SNAP MILL AND FILL		4500	

OHIO TURNPIKE BRIDGE OVER LORAIN ROAD (MP 152.3) ESTIMATED QUANTITIES

ITEM	TOTAL	UNIT	ITEM DESCRIPTION
SP 202		LUMP SUM	PORTIONS OF STRUCTURE REMOVED, AS PER PLAN
SP 509	237090	POUND	EPOXY COATED REINFORCING STEEL, GRADE 60
509	273	POUND	REINFORCING STEEL, REPLACEMENT OF EXISTING REINFORCING STEEL, AS PER PLAN
SP 511 (QC2)	708	CU. YD.	QC2 CONCRETE, BRIDGE DECK
SP 511 (QC2)	132	CU. YD.	QC2 CONCRETE, BRIDGE DECK (PARAPETS)
SP 511 (QC2)	105	CU. YD.	QC2 CONCRETE, ABUTMENT SLAB
513	15678	EACH	WELDED STUD SHEAR CONNECTORS
SP 514A		LUMP SUM	FIELD PAINTING MISC.: PAINT REPAIR/FIELD TOUCH UP, AS PER PLAN
SP 516A	27	LIN. FT.	CRACK REPAIR USING EPOXY INJECTION
SP 516B	768	LIN. FT.	SEALING OF CONSTRUCTION JOINTS
518	3	EACH	SCUPPERS, INCLUDING SUPPORTS, AS PER PLAN
SP 519	126	SQ. FT.	PATCHING CONCRETE STRUCTURES
SP 525A	2	EACH	HAZARDOUS WASTE COLLECTION, TESTING, AND CLASSIFICATION, AS PER PLAN
SP 525A		LUMP SUM	LEAD PAINT REMOVAL - WORKER/ENVIRONMENTAL PROTECTION AND WASTE HANDLING, AS PER PLAN
526	319	SQ. YD.	REINFORCED CONCRETE APPRACH SLAB (T=12")
SP 527		LUMP SUM	FALSEWORK, TEMPORARY BRACING AND PROTECTIVE STRUCTURES
SP 529	25	EACH	TRIM END OF STRUCTURAL STEEL MEMBER
SP 533	331	LIN. FT.	THREE (3) INCH CONTINUOUS STRIP SEAL IN STRUCTURAL STEEL JOINT
SP 533A	331	LIN. FT.	1 1/2 INCH ELASTOMETRIC COMPRESSION SEAL IN STRUCTURAL STEEL JOINTS
SP 536	1171	SQ. YD.	CONCRETE WEATHERPROOFING, SUBSTRUCTURE
SP 536	3204	SQ. YD.	CONCRETE WEATHERPROOFING, DECK, ABUTMENT SLABS AND APPROACH SLABS
SP 536	930	SQ. YD.	CONCRETE WEATHERPROOFING, BARRIERS AND PARAPETS
601	14	CU. YD.	CRUSHED AGGREGATE SLOPE PROTECTION

BAGLEY ROAD BRIDGE OVER OHIO TURNPIKE (MP 152.9) ESTIMATED QUANTITIES

ITEM	TOTAL	UNIT	ITEM DESCRIPTION
SP 202		LUMP SUM	PORTIONS OF STRUCTURE REMOVED, AS PER PLAN
SP 509	87276	POUND	EPOXY COATED REINFORCING STEEL, GRADE 60
510	340	EACH	DOWEL HOLES WITH NON-SHRINK, NON-METALLIC GROUT
511	9	CU. YD.	CLASS QC1 CONCRETE, ABUTMENT NOT INCLUDING FOOTING
SP 511 (QC2)	274	CU. YD.	QC2 CONCRETE, BRIDGE DECK
SP 511 (QC2)	83	CU. YD.	QC2 CONCRETE, BRIDGE DECK (PARAPETS)
513	3780	EACH	WELDED STUD SHEAR CONNECTORS
513	3727	POUND	STRUCTURAL STEEL MEMBERS, LEVEL UF, AS PER PLAN
SP 514A		LUMP SUM	FIELD PAINTING MISC.: PAINT REPAIR/FIELD TOUCH UP, AS PER PLAN
516		LUMP SUM	JACKING AND TEMPORARY SUPPORT OF SUPERSTRUCTURE, AS PER PLAN
SP 516G	24	EACH	REPLACE EXPANSION BEARING DEVICE, AS PER PLAN
SP 516J	6	EACH	REPLACE FIXED BEARING DEVICE, AS PER PLAN
SP 516B	580	LIN. FT.	SEALING OF CONSTRUCTION JOINTS
SP 519	18	SQ. FT.	PATCHING CONCRETE STRUCTURES
526	147	SQ. YD.	REINFORCED CONCRETE APPRACH SLAB (T=13")
SP 527		LUMP SUM	FALSEWORK, TEMPORARY BRACING AND PROTECTIVE STRUCTURES
SP 533	84	LIN. FT.	THREE (3) INCH CONTINUOUS STRIP SEAL IN STRUCTURAL STEEL JOINT
SP 536	324	SQ. YD.	CONCRETE WEATHERPROOFING, SUBSTRUCTURE
SP 536	1005	SQ. YD.	CONCRETE WEATHERPROOFING, DECK AND APPROACH SLABS
SP 536	690	SQ. YD.	CONCRETE WEATHERPROOFING, BARRIERS AND PARAPETS
SP 607	580	LIN. FT.	TYPE II FENCE, ALL ALUMINUM (6'-0" CHAIN LINK WITH SPECIALS)

DESIGN AGENCY
CARPENTER MARTY transportation
815 GOODALE BLVD. COLUMBUS, OH 43212
614.228.2041 WWW.CARMTRANS.COM

REVISIONS		BY	DATE
ADDENDUM 1		TWG	01/05
ADDENDUM 2		TWG	01/10
	-		-

NO.	
1	
2	
	-

CHECKED	IN CHARGE
TWG	TWG

DESIGNED	DRAWN
WCS	WCS

GENERAL SUMMARY

PROJECT 43-24-07

DATE: 11/17/23

OHIO TURNPIKE AND INFRASTRUCTURE COMMISSION

OHIO TURNPIKE

STRUCTURE - GENERAL NOTES

PROPOSED WORK - PART A

THE OHIO TURNPIKE BRIDGE OVER LORAIN ROAD M.P. 152.3 AND THE BAGLEY ROAD BRIDGE M.P. 152.9 OVER THE OHIO TURNPIKE SHALL BE REHABILITATED UNDER THIS CONTRACT. MAJOR WORK INCLUDES RAISING THE BRIDGE (MP 152.9), REPLACING THE BRIDGE DECK, APPROACH SLABS, AND DECK JOINTS, MISCELLANEOUS PATCHING OF SUBSTRUCTURE, SEALING OF CONSTRUCTION JOINTS, PERFORMING CONCRETE WEATHERPROOFING, MAINTENANCE OF TRAFFIC, AND INSTALLING FENCING. DETAILS OF THIS WORK ARE SHOWN IN THE PLANS. SEE PART B FOR PROPOSED BRIDGE WORK AT M.P. 152.1.

DESIGN SPECIFICATIONS

STANDARD SPECIFICATIONS FOR HIGHWAY BRIDGES ADOPTED BY THE AMERICAN ASSOCIATION OF STATE HIGHWAY AND TRANSPORTATION OFFICIALS, DATED 2002, AND THE OHIO "SUPPLEMENT" TO THESE SPECIFICATIONS.

THE CLASS OF CONCRETE AND THE GRADES OF REINFORCING STEEL FOR THE CONSTRUCTION ARE AS FOLLOWS:

CONCRETE CLASS QC1 - COMPRESSIVE STRENGTH 4,000 PSI (ABUTMENTS)
CONCRETE CLASS QC2 - COMPRESSIVE STRENGTH 4,500 P.S.I. (SUPERSTRUCTURE)
REINFORCING STEEL - ASTM A615, A616, A617 - GRADE 60

DESIGN LOADING

HS20-44 CASE 1 (MP 152.3) AND CASE II (MP 152.9) AND THE ALTERNATE MILITARY LOADING

DECK PROTECTION METHOD

EPOXY COATED REINFORCING STEEL
2 ½" CONCRETE COVER

MONOLITHIC WEARING SURFACE

MONOLITHIC WEARING SURFACE IS ASSUMED, FOR DESIGN PURPOSES TO BE 1" THICK

PROTECTION OF TRAFFIC

THE CONTRACTOR SHALL SUBMIT A PLAN TO PROTECT THE TRAVELING PUBLIC FROM ALL REMOVAL DEBRIS AND/OR CONSTRUCTION MATERIAL THAT MAY COME IN CONTACT OR POSE A DANGER TO THE TRAVELING PUBLIC. SLURRY AND/OR WASTE SHALL NOT BE PERMITTED TO FLOW ONTO OPEN LANES OF TRAFFIC OR INTO STORM SEWERS. THE CONTRACTOR MAY PERFORM THE WORK DURING A WEEKEND, IN ACCORDANCE WITH SP 104. THE PLAN MUST BE SUBMITTED TO THE COMMISSION AND GOVERNING LOCAL AGENCIES PRIOR TO THE COMMENCEMENT OF ANY WORK.

UTILITIES

THE CONTRACTOR SHALL EXERCISE DUE CAUTION WHILE PERFORMING WORK ACTIVITIES AROUND EXPOSED UTILITIES. THE CONTRACTOR MUST ENSURE THAT THESE UTILITIES ARE NOT DAMAGED AS A RESULT OF WORK ACTIVITIES OR THE OPERATION OF EQUIPMENT, AND THE CONTRACTOR MAY BE REQUIRED TO PROVIDE TEMPORARY PROTECTIVE OR SUPPORT SYSTEMS IN ORDER TO PREVENT DAMAGE TO UTILITY LINES AND THEIR SUPPORTS DURING STRUCTURE REPAIR OPERATIONS. IF ANY UTILITIES ARE DAMAGED DURING CONSTRUCTION ACTIVITIES, THE CONTRACTOR SHALL IMMEDIATELY NOTIFY THE ENGINEER AND THE APPROPRIATE UTILITY OWNER(S).

EXISTING STRUCTURE VERIFICATION

DETAILS, DIMENSIONS, AND ELEVATIONS SHOWN ON THESE PLANS PERTAINING TO THE EXISTING STRUCTURE HAVE BEEN OBTAINED FROM PLANS OF THE EXISTING STRUCTURE AND/OR FROM FIELD OBSERVATIONS AND MEASUREMENTS. CONSEQUENTLY, THEY ARE INDICATIVE OF THE EXISTING STRUCTURE AND THE PROPOSED WORK BUT THEY SHALL BE CONSIDERED TENTATIVE AND APPROXIMATE. THE CONTRACTOR IS REFERRED TO SECTION 501.02 OF THE SPECIFICATIONS AND OTIC INSTRUCTION TO BIDDERS ARTICLE 2.1 AND GENERAL CONDITIONS ARTICLE 1.5.

CONTRACT BID PRICES SHALL BE BASED UPON A RECOGNITION OF THE UNCERTAINTIES DESCRIBED ABOVE AND UPON A PREBID EXAMINATION OF THE EXISTING STRUCTURE BY THE CONTRACTOR. HOWEVER, ALL PROJECT WORK SHALL BE BASED UPON ACTUAL DETAILS, DIMENSIONS, ELEVATIONS, AND SKEW ANGLES WHICH HAVE BEEN FIELD VERIFIED BY THE CONTRACTOR. THE STRUCTURAL STEEL AND STRUCTURAL STEEL DECK JOINTS SHALL NOT BE FABRICATED UNTIL ACTUAL DETAILS, DIMENSIONS, ELEVATIONS, AND SKEW ANGLES HAVE BEEN FIELD VERIFIED BY THE CONTRACTOR.

ANY ADDITIONAL COSTS RESULTING FROM VARIATIONS FROM PLAN DIMENSIONS SHALL BE THE RESPONSIBILITY OF THE CONTRACTOR AND NO ADDITIONAL PAYMENT OVER THE UNIT PRICE BID WILL BE AWARDED BY THE COMMISSION.

REMOVAL

GENERAL:

THE CONTRACTOR SHALL REMOVE THE DESIGNATED PORTIONS OF THE EXISTING STRUCTURE TO THE LIMITS SHOWN ON THE PLANS OR TO THE LIMITS AS DIRECTED BY THE ENGINEER. WHEN SO DIRECTED BY THE ENGINEER, THE CONTRACTOR SHALL WET DOWN THE CONCRETE THOROUGHLY DURING REMOVAL OPERATIONS TO PREVENT SPREAD OF DUST. ALL NECESSARY LABOR, EQUIPMENT AND MATERIAL SHALL BE PROVIDED BY THE CONTRACTOR AND INCLUDED WITH ITEM SP 202, PORTIONS OF STRUCTURE REMOVED, AS PER PLAN, FOR PAYMENT.

CONCRETE REMOVAL:

CONCRETE SHALL BE REMOVED BY MEANS OF APPROVED PNEUMATIC HAMMERS EMPLOYING POINTED AND BLUNT CHISEL EDGED TOOLS AND/OR BY SAW CUTTING THE CONCRETE DECKS AND REMOVING IN SECTIONS.

CARE SHALL BE TAKEN TO ENSURE AGAINST DAMAGE TO THE STEEL AND CONCRETE MEMBERS WHICH ARE TO BE RETAINED AND TO PRESERVE THE BOND OF THE RETAINED REINFORCEMENT TO THE EXISTING CONCRETE. THESE BARS SHALL BE CLEANED OF ALL CONCRETE FRAGMENTS AND FOREIGN MATTER. PNEUMATIC HAMMERS SHALL NOT BE PLACED IN DIRECT CONTACT WITH THE BARS; HAND TOOLS SHALL BE EMPLOYED FOR FINAL CLEANING. DAMAGED AREAS OF REINFORCEMENT THAT ARE TO REMAIN SHALL BE CUT AND STRESS TRANSFER ACCOMPLISHED BY EITHER A LAPPED OR MECHANICAL SPLICE. ANY ADDITIONAL REINFORCEMENT OR MECHANICAL SPLICES SHALL BE PROVIDED BY THE CONTRACTOR AT NO ADDITIONAL COST TO THE COMMISSION. OTHER EXISTING REINFORCEMENT WITHIN THE REMOVAL LIMITS SHALL BE REMOVED AND DISPOSED OF.

DECK REMOVALS - COMPOSITE DECK DESIGNS - STEEL SUPERSTRUCTURES

DUE TO THE PRESENCE OF WELDED STUDS TO THE EXISTING STRUCTURAL STEEL, SUBMIT A DETAILED PROCEDURE OF THE DECK REMOVAL WITH THE ENGINEERED DRAWINGS ACCORDING TO C&MS 501.05. DEPARTMENT ACCEPTANCE IS NOT REQUIRED. THE PROCEDURE SHALL INCLUDE ALL DETAILS, EQUIPMENT AND METHODS TO BE USED FOR REMOVAL OF THE CONCRETE OVER THE FLANGES AND AROUND THE STUDS. REPLACE OR REPAIR MAIN STEEL AND STUDS DAMAGED BY THE REMOVAL OPERATIONS AT NO COST TO THE PROJECT. AT LEAST 7 DAYS BEFORE PERFORMING REPAIR WORK, SUBMIT A PROPOSED REPAIR PLAN ACCORDING TO C&MS 501.05 C TO THE ENGINEER TO REPLACE OR REPAIR STRUCTURAL STEEL AND STUDS DAMAGED BY THE REMOVAL OPERATIONS. THE DEPARTMENT WILL NOT PAY FOR DAMAGE REPAIRS.

DISPOSAL OF REMOVED MATERIAL:

THE CONTRACTOR SHALL NOT PERMIT ANY REMOVED MATERIAL TO DROP TO THE GROUND. MEANS SHALL BE PROVIDED FOR CATCHING REMOVED MATERIAL. THE CONTRACTOR SHALL SUBMIT TO THE ENGINEER FOR APPROVAL DETAILS OF THE METHODS TO BE USED FOR REMOVING AND COLLECTING THE MATERIAL. ALL CONCRETE, STEEL, REINFORCING STEEL, ASPHALT, ETC. REMOVED FROM THE STRUCTURE, UNLESS SPECIFIED, SHALL BECOME THE PROPERTY OF THE CONTRACTOR AND SHALL BE PROMPTLY REMOVED BY HIM FROM THE SITE.

UNDER NO CIRCUMSTANCES SHALL THE MATERIAL BE PERMITTED TO REMAIN ON THE PREMISES, RIGHT OF WAY OR STREETS PENDING DISPOSAL OF SAME OR FOR ANY OTHER PURPOSES, UNLESS OTHERWISE SPECIFIED BY THE ENGINEER.

CUTTING OR BENDING OF REINFORCING BARS

ANY CUTTING OR BENDING OF BARS NECESSARY TO ACCOMMODATE ANY ESSENTIAL ELEMENT OF WORK RELATED TO THE PROJECT, SHALL BE INCLUDED IN THE UNIT PRICE BID FOR ITEM 509 REINFORCING STEEL, REPLACEMENT OF EXISTING REINFORCING STEEL, AS PER PLAN AND/OR ITEM SP 509 EPOXY COATED REINFORCING STEEL, GRADE 60 UNLESS OTHERWISE NOTED.

DIMENSIONS

DIMENSIONS GIVEN ARE MEASURED HORIZONTALLY AND AT 60° F UNLESS OTHERWISE NOTED. DIMENSIONS GIVEN FOR THE EXISTING STRUCTURE ARE FROM THE ORIGINAL CONSTRUCTION PLANS. SOME VARIATION FROM PLAN DIMENSIONS ARE EXPECTED. THE CONTRACTOR SHALL BE RESPONSIBLE FOR PROPER FIT-UP BETWEEN THE PROPOSED AND EXISTING CONSTRUCTION. ADEQUATE MEASUREMENTS SHALL BE MADE IN THE FIELD PRIOR TO THE FABRICATION OR INSTALLATION OF ANY PART TO ENSURE THAT ALL PARTS CAN BE PROPERLY ASSEMBLED AS SPECIFIED IN THE PLANS. ANY ADDITIONAL COST RESULTING FROM VARIATIONS FROM PLAN DIMENSIONS IS THE RESPONSIBILITY OF THE CONTRACTOR AND NO ADDITIONAL PAYMENT WILL BE AWARDED BY THE COMMISSION.

REPAIR OF EXISTING CONCRETE ELEMENTS

EXISTING REINFORCED CONCRETE STRUCTURE ELEMENTS WHICH ARE INCORPORATED IN THIS CONSTRUCTION PROJECT ARE TO BE MODIFIED AND/OR REPAIRED. A CONDITION SURVEY WAS PERFORMED IN SEPTEMBER 2022. REPAIR AREAS WERE DETERMINED BY VISUAL INSPECTION. THE STRUCTURAL ELEMENTS INSPECTED INCLUDE CONCRETE ABUTMENTS AND PIERS (EXPOSED SURFACES ONLY). THE RECORDS OF THIS INSPECTION ARE THE BASIS FOR THE REPAIR RECOMMENDATIONS AS DETAILED IN THE PLANS.

ITEM SP 536 - CONCRETE WEATHERPROOFING

ITEM SP 536 - CONCRETE WEATHERPROOFING SHALL BE APPLIED TO THE FOLLOWING NEW EXPOSED CONCRETE SURFACES OF THE BRIDGE:

- THE TOP OF NEW ABUTMENT SLABS AND NEW SUPERSTRUCTURE SLABS.
- ALL NEW PARAPET SURFACES AND DECK SLAB SIDE EDGES.
- THE BOTTOM SURFACE OF THE NEW SUPERSTRUCTURE SLAB FROM THE SLAB SIDE EDGE TO THE EXTERIOR STRINGER FLANGE.
- ALL EXPOSED CONCRETE SURFACES OF ALL ABUTMENTS AND PIERS. SEALING SHALL NOT BE DONE UNTIL ALL CONCRETE PATCHING REPAIRS HAVE BEEN COMPLETED AND CURED.

CARE SHALL BE TAKEN NOT TO APPLY WEATHERPROOFING ON CONSTRUCTION JOINT SURFACES, SURFACES TO RECEIVE JOINT SEALER OR FASCIA BEAM PAINT.

CONCRETE PARAPETS

PARAPET FORMS:

FORMS FOR THE BRIDGE PARAPETS AND SLAB EDGES SHALL BE IN ACCORDANCE WITH 508.02 OF THE SPECIFICATIONS AND THE FOLLOWING:

WHEN WOOD FORMS ARE USED THEY SHALL PROVIDE A SMOOTH SURFACE OF UNIFORM TEXTURE AND COLOR SUBSTANTIALLY EQUAL TO THAT WHICH WOULD BE OBTAINED WITH THE USE OF NEW PLYWOOD CONFORMING TO THE NATIONAL INSTITUTE OF STANDARDS AND TECHNOLOGY PRODUCT STANDARD PSI FOR EXTERIOR B-B CLASS I PLYWOOD.

FORMS SHALL BE OF A CONSTRUCTION WHICH WOULD ALLOW FOR THEIR REMOVAL WITHIN 24 HOURS OF THE CONCRETE PLACEMENT WITHOUT CAUSING DAMAGE TO THE CONCRETE.

CONSTRUCTION JOINTS

CONSTRUCTION JOINT SURFACES SHALL BE FREE FROM OIL, LAITANCE, FORM RELEASE AGENT, OR ANY OTHER MATERIAL THAT WOULD PREVENT BONDING TO THE CONCRETE SURFACE. ALL LAITANCE AND OTHER CONTAMINANTS SHALL BE REMOVED BY HIGH PRESSURE WATER BLASTING WITH A MINIMUM PRESSURE OF 5,000 P.S.I. HOWEVER, WATER BLASTING SHALL NOT BE REQUIRED WHERE EXISTING CONCRETE HAS BEEN ROUGHENED BY JACKHAMMERS DURING CONCRETE REMOVAL OPERATIONS. SURFACES SHALL BE THOROUGHLY DRENCHED WITH CLEAN WATER AND ALLOWED TO DRY TO A DAMP CONDITION FREE OF STANDING WATER BEFORE PLACING CONCRETE. PREPARATION OF CONSTRUCTION JOINT SURFACES SHALL NOT BE MEASURED FOR PAYMENT. THE COST THEREOF SHALL BE INCLUDED IN THE CONTRACT PRICE OF THE PERTINENT CONCRETE ITEMS.

EXISTING RIGHT OF WAY FENCE

IT IS THE INTENT OF THE PROJECT FOR THE EXISTING RIGHT OF WAY FENCE NEAR THE BRIDGE TO REMAIN, HOWEVER IF THE CONTRACTOR DEEMS IT NECESSARY TO REMOVE THE FENCE FOR HIS OPERATIONS AS APPROVED BY THE ENGINEER, THE CONTRACTOR SHALL CAREFULLY REMOVE THE FENCE AND REINSTALL THE FENCE IN ACCORDANCE WITH ITEM 607. IF THE FENCE BECOMES DAMAGED DUE TO THE CONTRACTORS OPERATIONS THE FENCE SHALL BE REPLACED AT NO COST TO THE COMMISSION.

ALL LABOR, MATERIALS, EQUIPMENT AND INCIDENTALS NECESSARY TO COMPLETE THE WORK SHALL BE CONSIDERED INCIDENTAL TO THE PROJECT AND NO ADDITIONAL COMPENSATION SHALL BE GRANTED.

EROSION CONTROL

IT IS THE INTENT OF THE PROJECT TO NOT DISTURB ANY SEEDED AREAS AND/OR DRAINAGE ELEMENTS. ANY WORK INVOLVING SEEDED AREAS, DRAINAGE ELEMENTS OR EROSION CONTROL SHALL BE CONSIDERED INCIDENTAL TO THE PROJECT COST AND SHALL BE REPAIRED/PROTECTED AS DIRECTED BY THE ENGINEER.

ALL LABOR, MATERIALS, EQUIPMENT AND INCIDENTALS NECESSARY TO COMPLETE THE WORK SHALL BE CONSIDERED INCIDENTAL TO THE PROJECT AND NO ADDITIONAL COMPENSATION SHALL BE GRANTED.

~~ITEM 513 - STRUCTURAL STEEL MEMBERS, LEVEL UF, AS PER PLAN:~~

~~ALL REQUIREMENTS OF 513 APPLY TO SHOP FABRICATED MEMBERS. PERFORM WORK FOR FIELD FABRICATED MEMBERS ACCORDING TO ITEM 513, EXCEPT AS MODIFIED HEREIN. THE COMMISSION WILL NOT REQUIRE THE CONTRACTOR PERFORMING FIELD FABRICATION TO BE PRE-QUALIFIED AS SPECIFIED IN SUPPLEMENT 1078. SUBMIT A WRITTEN LETTER OF MATERIAL ACCEPTANCE IN ACCORDANCE WITH 501.06, TO THE ENGINEER. PROVIDE THE ENGINEER "AS-BUILT" DRAWINGS ACCORDING TO 513.06, EXCEPT 501.04 DOES NOT APPLY.~~

~~THE FOLLOWING MEMBERS ARE INCLUDED IN THIS ITEM:~~
~~LOAD PLATES FOR BAGLEY ROAD BRIDGE~~

ITEM 516 - JACKING AND TEMPORARY SUPPORT OF SUPERSTRUCTURE, AS PER PLAN

THIS WORK CONSISTS OF RAISING OR RE-POSITIONING EXISTING STRUCTURES TO THE DIMENSIONS AND REQUIREMENTS DEFINED IN THE PROJECT PLANS.

BAGLEY ROAD BRIDGE TO BE RAISED 2½".

JACKING SHALL BE PERFORMED TO RAISE THE BRIDGE UNIFORMLY IN ORDER TO MINIMIZE INDUCED STRESSES INTO THE SUPERSTRUCTURE. THE MAXIMUM DIFFERENTIAL ELEVATION CHANGE BETWEEN ADJACENT SUPERSTRUCTURE MEMBERS IS ¼-INCH AS MEASURED AT THE OPPOSITE ENDS OF THE SAME CROSS-FRAME MEMBER. THE MAXIMUM DIFFERENTIAL ELEVATION CHANGE BETWEEN ADJACENT BEARINGS OF THE SAME SUPERSTRUCTURE MEMBER IS 1-INCH. PERFORM WORK IN ACCORDANCE WITH C&MS 501.05.B.5. THE SUPERSTRUCTURES SHALL NOT BE RAISED MORE THAN NECESSARY TO ACCOMPLISH THE WORK. ANY DAMAGE TO STRUCTURAL MEMBERS, CONNECTIONS, OR PARTS THAT ARE TO REMAIN AS PART OF THE PERMANENT CONSTRUCTION SHALL BE CORRECTED AND/OR REPAIRED BY THE CONTRACTOR AT THE CONTRACTOR'S EXPENSE AND TO THE SATISFACTION OF THE CHIEF ENGINEER.

SUBMIT ENGINEERED DRAWINGS TO THE CHIEF ENGINEER'S PROJECT REPRESENTATIVE FOR JACKING AND TEMPORARY SUPPORT IN ACCORDANCE WITH C&MS 501.05. THE SUBMITTAL SHALL INCLUDE CALCULATIONS AND ALL DETAILS OF THE PROPOSED TEMPORARY SUPPORT AND JACKING SYSTEM, INDICATING MATERIALS, MEMBER SIZES, SPACING, SUPPORT LOCATIONS, JACKING POINTS, REACTIONS, AND REMOVAL PROCEDURES.

IF, DURING THE JACKING OPERATIONS, CRACKING OF THE CONCRETE SUPERSTRUCTURE, SEPARATION OF THE CONCRETE DECK FROM THE STEEL STRINGERS, OR OTHER DAMAGE TO THE STRUCTURE IS VISUALLY OBSERVED, IMMEDIATELY CEASE THE JACKING OPERATION AND INSTALL SUPPORTS TO THE SATISFACTION OF THE ENGINEER. ANALYZE THE DAMAGE AND SUBMIT A METHOD OF CORRECTION TO THE ENGINEER FOR APPROVAL. EPOXY INJECT ALL BEAMS THAT SEPARATE FROM THE DECK FOR THE DISTANCE OF THE SEPARATION IN ACCORDANCE WITH C&MS 512.07. THE COMMISSION WILL NOT PAY FOR THE COST OF THIS EPOXY INJECTION OR OTHER REQUIRED REPAIRS. THE BRIDGE BEARINGS SHALL BE FULLY SEATED AT ALL CONTACT AREAS. IF FULL SEATING IS NOT ATTAINED, SUBMIT A REPAIR PLAN TO THE ENGINEER. THE COMMISSION WILL NOT PAY FOR THE REPAIR COSTS TO ENSURE FULL SEATING ON BEARINGS.

THE COMMISSION WILL PAY FOR THE ACCEPTED QUANTITIES AT THE CONTRACT UNIT PRICE FOR:

ITEM	DESCRIPTION	UNIT
516	JACKING AND TEMPORARY SUPPORT OF SUPERSTRUCTURE, AS PER PLAN	LUMP

AND SHALL INCLUDE ALL LABOR, EQUIPMENT, MATERIALS, AND INCIDENTALS NECESSARY TO COMPLETE THIS WORK AS DESCRIBED ABOVE.

ASBESTOS

AN ASBESTOS SURVEY OF THE TWO BRIDGES DETERMINED THAT NO ASBESTOS IS PRESENT.

ITEM SP 529 - TRIM END OF STRUCTURAL STEEL MEMBER

ABUTMENT BEAM ENDS ARE TO BE TRIMMED TO PROVIDE A 3 INCH CLEARANCE FROM THE BACKWALL. ALL WORK SHALL MEET APPROVAL OF THE ENGINEER.

FOLLOWING BEAM END TRIMMING, PAINT THE NEWLY EXPOSED BEAM END PER SP 514A. PAYMENT FOR PAINTING TO BE INCLUDED WITH ITEM 514A - FIELD PAINTING, MISC.: PAINT REPAIR/FIELD TOUCH-UP, AS PER PLAN.

DECK PLACEMENT DESIGN ASSUMPTIONS

THE FOLLOWING ASSUMPTIONS OF CONSTRUCTION MEANS AND METHODS WERE MADE FOR THE ANALYSIS AND DESIGN OF THE SUPERSTRUCTURE. THE CONTRACTOR IS RESPONSIBLE FOR THE DESIGN OF THE FALSEWORK SUPPORT SYSTEM WITHIN THESE PARAMETERS AND WILL ASSUME RESPONSIBILITY FOR SUPERSTRUCTURE ANALYSIS FOR DEVIATION FROM THESE DESIGN ASSUMPTIONS.

AN EIGHT WHEEL FINISHING MACHINE WITH A MAXIMUM WHEEL LOAD OF 2.46 KIPS (MP 152.3) AND 2.38 KIPS (MP 152.9).

A MINIMUM OUT-TO-OUT WHEEL SPACING AT EACH END OF THE MACHINE OF 103".

A MAXIMUM SPACING OF OVERHAND FALSEWORK BRACKETS OF 48 IN.

DESIGN AGENCY
CARPENTER MARTY TRANSPORTATION
850 EAST BROAD STREET · COLUMBUS, OHIO 43205
PHONE: (614) 228-1234 · FAX: (614) 228-1239

NO.	REVISIONS	BY	DATE
1	ADDENDUM 2	STK	1/12
-	-	-	-
-	-	-	-

DESIGNED	CHECKED
JMV	BWR
DRAWN	IN CHARGE
JMV	STK

LORAIN COUNTY

BRIDGE - GENERAL NOTES

M.P. 152.3 & M.P. 152.9

PROJECT 43-24-07

DATE: 11/17/23

1 / 1

51 / 86

OHIO TURNPIKE AND INFRASTRUCTURE COMMISSION

OHIO TURNPIKE

STRUCTURE - GENERAL NOTES

ITEM SP 514A - FIELD PAINTING MISC.: PAINT REPAIR/FIELD TOUCH UP, AS PER PLAN

THIS WORK CONSISTS OF THE FIELD TOUCH-UP AND REPAIR OF EXISTING PAINT THAT HAS BEEN DAMAGED DUE TO REQUIRED STRUCTURAL STEEL WORK SUCH AS THE TRIMMING OF BEAM ENDS, REMOVAL OF EXISTING BEARINGS, REMOVAL OF EXISTING LOAD PLATES, AND ANY OTHER STRUCTURAL STEEL WORK REQUIRING THE REMOVAL OF EXISTING PAINT.

ALL WORK SHALL BE IN ACCORDANCE WITH THE PROVISIONS OF SP 514A EXCEPT ALL ITEMS LISTED UNDER SECTION 4.02 - BASIS OF PAYMENT SHALL BE INCLUDED IN THE LUMP SUM BID PRICE FOR:

ITEM	DESCRIPTION	UNIT
514A	FIELD PAINTING MISC: PAINT REPAIR/ TOUCH-UP, AS PER PLAN	LUMP

ITEM SP 525A - HAZARDOUS WASTE COLLECTION, TESTING, AND CLASSIFICATION, AS PER PLAN

THIS WORK CONSISTS OF THE COLLECTION, TESTING, AND CLASSIFICATION OF EXISTING PAINT SAMPLES ON EXISTING STRUCTURES REQUIRING STRUCTURAL STEEL WORK SUCH AS THE TRIMMING OF BEAM ENDS AND ANY OTHER STRUCTURAL STEEL WORK REQUIRING THE REMOVAL OF EXISTING PAINT WHERE THE CLASSIFICATION IS UNKNOWN. THIS ITEM SHALL BE PERFORMED PER THE REQUIREMENTS SP 525A: SECTION 3.06 D. - WASTE SAMPLING, TESTING, AND CLASSIFICATION AND COMPLETED PRIOR TO COMMENCING ANY STRUCTURAL STEEL WORK. AT LEAST TWO SAMPLES PER BRIDGE WILL BE REQUIRED TO DETERMINE THE EXISTING PAINT HAZARDOUS WASTE CLASSIFICATION. LOCATIONS OF THE SAMPLE COLLECTION WILL BE AS DIRECTED BY THE ENGINEER.

PAYMENT FOR ACCEPTED QUANTITIES WILL BE MADE AT THE CONTRACT UNIT PRICE FOR:

ITEM	DESCRIPTION	UNIT
SP 525A	HAZARDOUS WASTE COLLECTION, TESTING, AND CLASSIFICATION, AS PER PLAN	EACH

AND SHALL INCLUDE ALL LABOR, EQUIPMENT, MATERIALS, AND INCIDENTALS NECESSARY TO COMPLETE THIS WORK AS DESCRIBED ABOVE.

ITEM SP 525A- LEAD PAINT REMOVAL - WORKER/ENVIRONMENTAL PROTECTION AND WASTE HANDLING, AS PER PLAN

THIS WORK CONSISTS OF THE REMOVAL OF EXISTING PAINT THAT HAS BEEN TESTED AND CLASSIFIED AS A HAZARDOUS WASTE PER 525A SECTION 3.06 D.5. PAINT REMOVAL FOR THIS ITEM INCLUDES STRUCTURAL STEEL WORK SUCH AS THE TRIMMING OF BEAM ENDS AND ANY OTHER STRUCTURAL STEEL WORK REQUIRING THE REMOVAL OF EXISTING HAZARDOUS PAINT.ALL WORK SHALL BE IN ACCORDANCE WITH THE PROVISIONS OF SP 525A EXCEPT ALL ITEMS LISTED UNDER SECTION 4.02- BASIS OF PAYMENT SHALL BE INCLUDED IN THE LUMP SUM BID PRICE FOR:

ITEM	DESCRIPTION	UNIT
SP 525A	LEAD PAINT REMOVAL - WORKER/ENVIRONMENTAL PROTECTION AND WASTE HANDLING, AS PER PLAN	LUMP

ITEM SP 516G - REPLACE EXPANSION BEARING DEVICE, AS PER PLAN
ITEM SP 516J - REPLACE FIXED BEARING DEVICE, AS PER PLAN

THIS WORK SHALL CONFORM TO THE BEARING DETAILS AS PROVIDED IN THE PLANS AND THE SPECIAL PROVISIONS SP 516G AND SP 516J EXCEPT THAT SEPARATE PAYMENT WILL BE MADE FOR THE FOLLOWING ITEMS:

ITEM	DESCRIPTION	UNIT
514A	FIELD PAINTING MISC: PAINT REPAIR/TOUCH-UP, AS PER PLAN	LUMP
516	JACKING AND TEMPORARY SUPPORT OF SUPERSTRUCTURE, AS PER PLAN	LUMP

DESIGN AGENCY
CARPENTER MARTY TRANSPORTATION
8402 BRECKSVILLE ROAD · COLUMBUS, OHIO 43235
PHONE: (614) 526-7000 · FAX: (614) 526-7010

NO.	REVISIONS	BY	DATE
1	ADDENDUM 2	STK	1/12
-	-	-	-
-	-	-	-

DESIGNED	CHECKED
JMV	BWR
DRAWN	IN CHARGE
JMV	STK

LORAIN COUNTY

BRIDGE - GENERAL NOTES

M.P. 152.3 & M.P. 152.9

PROJECT 43-24-07

DATE: 11/17/23

1 / 1

51A / 86

OHIO TURNPIKE

OHIO TURNPIKE AND INFRASTRUCTURE COMMISSION

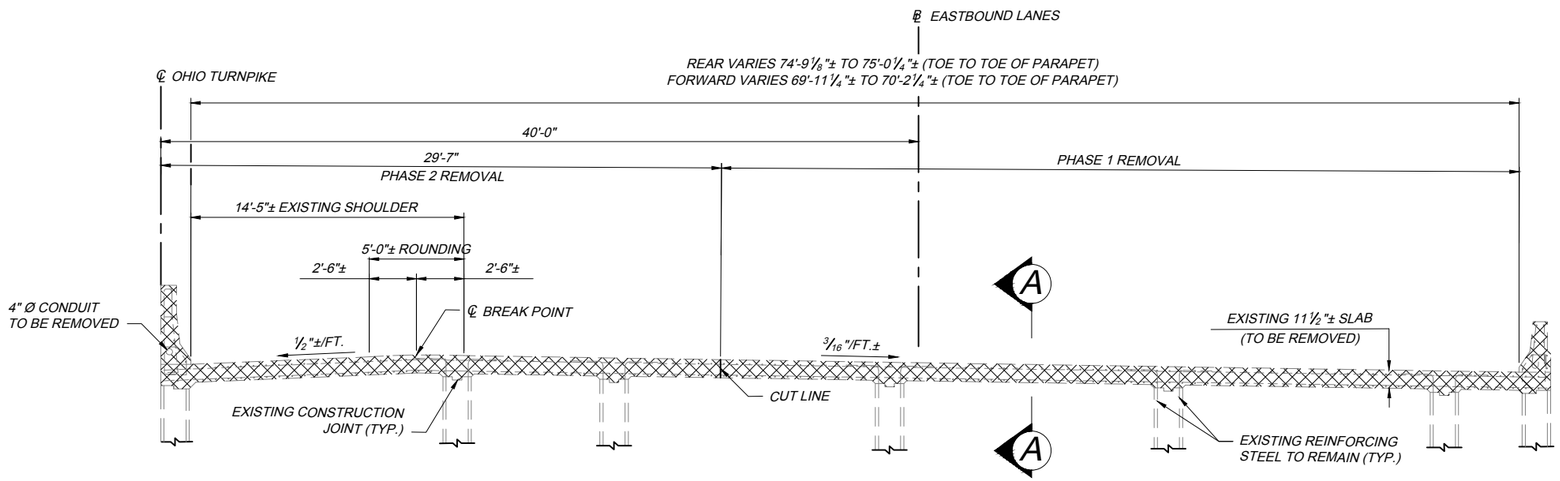

EXISTING EASTBOUND ABUTMENT SECTION
PHASE 1 AND 2 REMOVAL DETAILS

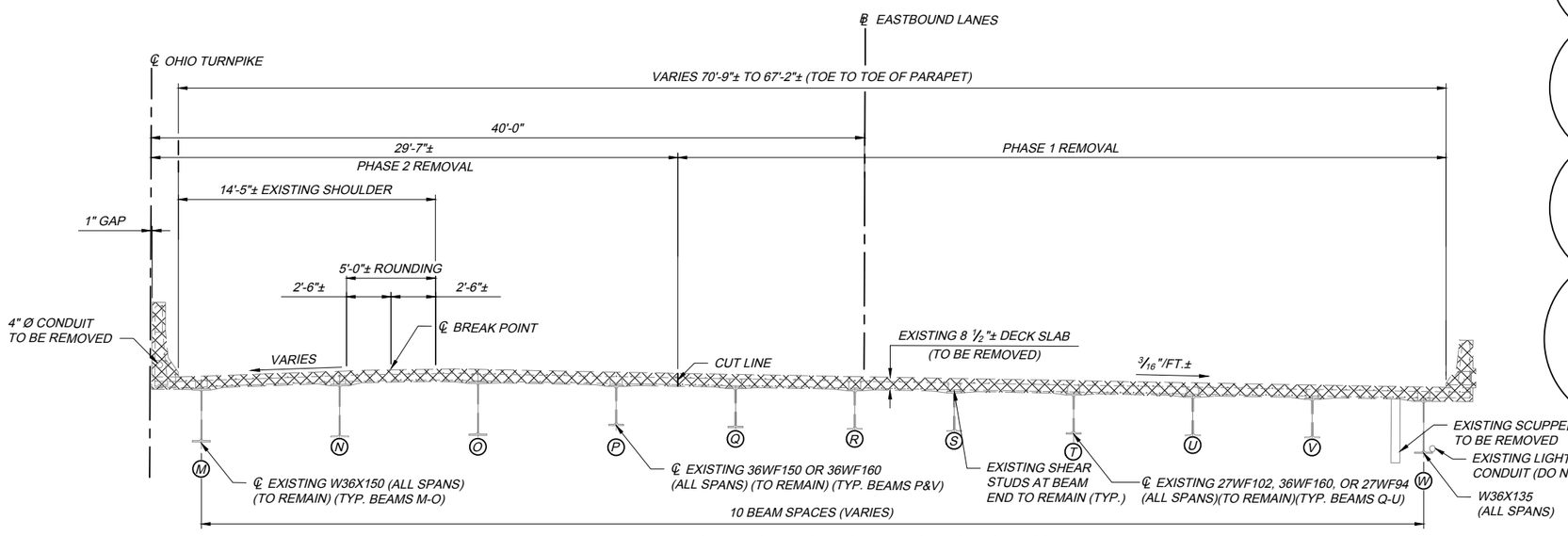

EXISTING TRANSVERSE SECTION

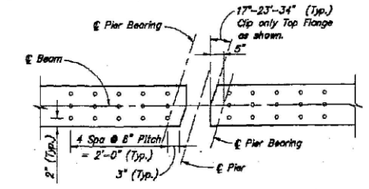

PLAN
SHEAR CONNECTOR SPACING & FLANGE CLIPPING AT PIER 1 & PIER 3

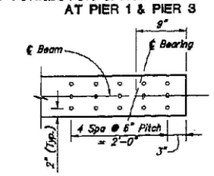

PLAN
SHEAR CONNECTOR SPACING AT ABUTMENTS

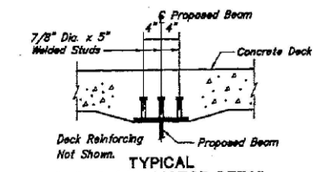

TYPICAL
SHEAR CONNECTOR DETAIL

EXISTING SHEAR CONNECTOR DETAILS
BEAMS J, K, L, M, N, AND O

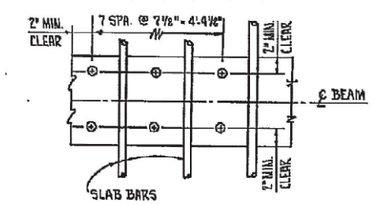

14 - 7/8" x 4" SHEAR STUDS REQUIRED AT ENDS OF BEAMS AT ABUTMENTS AND EXPANSION PIERS. TYPICAL EACH BRIDGE.

WELDED STUD SHEAR CONNECTORS

EXISTING SHEAR CONNECTOR DETAILS
BEAMS A THRU I AND BEAMS P THRU W

NOTES:

1. ANY REMAINING WELD MATERIAL THAT ATTACHED THE REMOVED STEEL TO THE REMAINING STEEL SHALL BE REMOVED BY METHODS APPROVED BY THE ENGINEER. THESE METHODS SHALL NOT CAUSE ANY DAMAGE TO THE REMAINING STEEL. ALL REMAINING EXCESS WELD MATERIAL SHALL BE REMOVED BY GRINDING IN THE DIRECTION OF STRESS. INCLUDE WITH ITEM SP 202 FOR PAYMENT.
2. TRANSVERSE AND ABUTMENT SECTIONS VIEWED FACING FORWARD.
3. SEE SHEET 5 / 23 FOR SECTION A-A AND DECK JOINT REMOVAL DETAILS.
4. CONTRACTOR HAS OPTION OF REMOVING EXISTING SHEAR STUDS AT NO ADDITIONAL COST TO OHIO TURNPIKE.

LEGEND

-DENOTES PORTIONS OF STRUCTURE TO BE REMOVED AS PER ITEM SP 202

DESIGN AGENCY: CARPENTER MARTY transportation

NO.	REVISIONS	BY	DATE
1	ADDENDUM 2	STK	01/08

DESIGNED	CHECKED	DRAWN	IN CHARGE
SMH	STK	SMH	WHM

EASTBOUND REMOVAL DETAILS
OHIO TURNPIKE OVER LORAIN ROAD
LORAIN COUNTY
M.P. 152.3

PROJECT 43-24-07
DATE: 11/17/23

6 / 23

57 / 86

OHIO TURNPIKE AND INFRASTRUCTURE COMMISSION

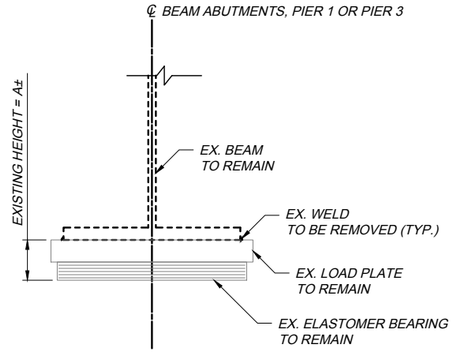

REMOVAL DETAIL

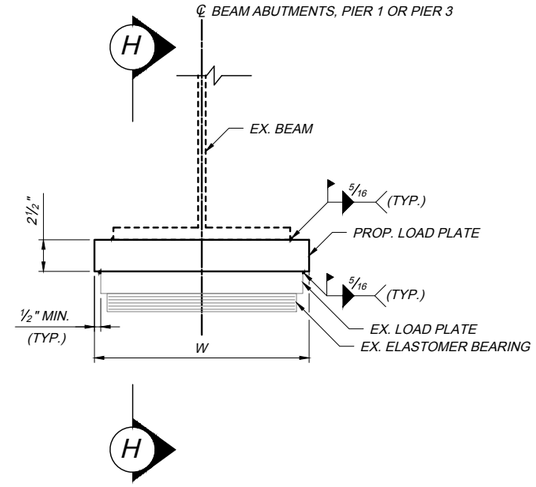

ELEVATION

EXPANSION BEARING DETAILS

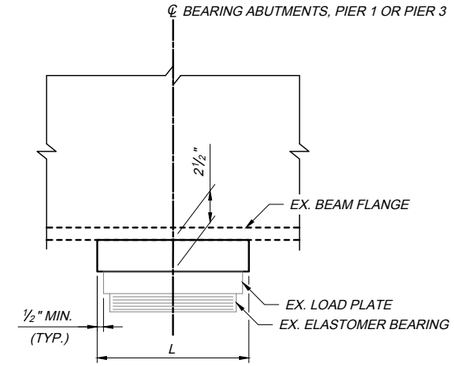

SECTION H-H

NOTE

THE STEEL LOAD PLATE SHALL BE ASTM A572 GRADE 50 STEEL ~~AND SHALL BE PAINTED IN ACCORDANCE WITH SP 514A. PAINTING OF LOAD PLATE TO BE INCLUDED FOR PAYMENT WITH ITEM 513, STRUCTURAL STEEL MEMBERS, LEVEL UF.~~

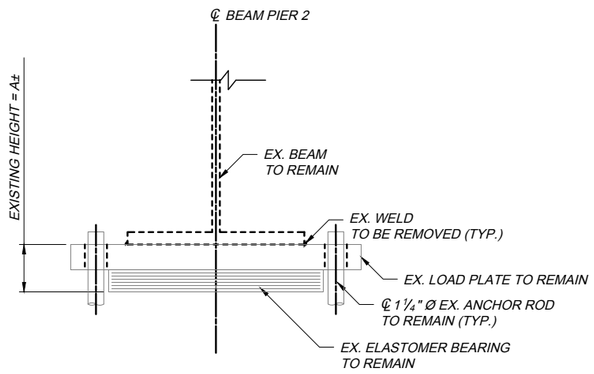

REMOVAL DETAIL

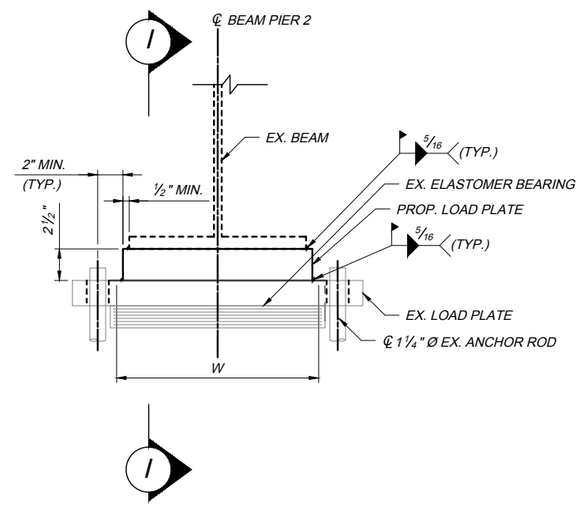

ELEVATION

FIXED BEARING DETAILS

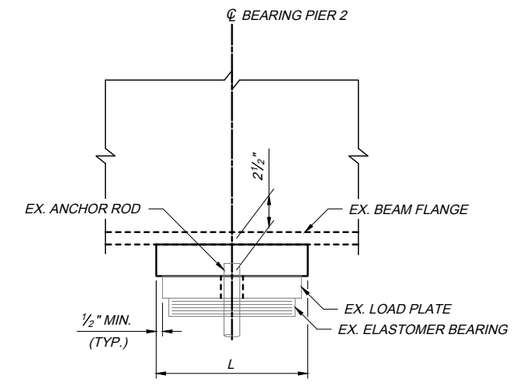

SECTION I-I

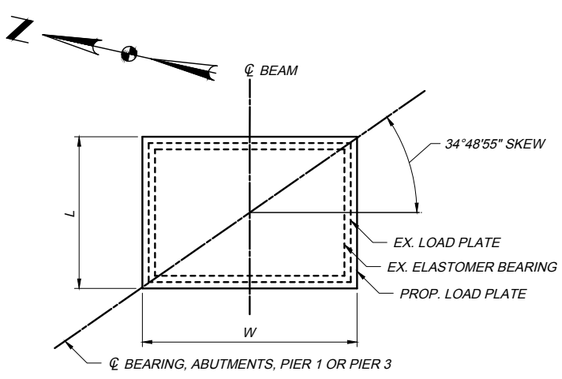

EXPANSION BEARING PLAN

BEARING LOCATION	TYPE	STEEL LOAD PLATE	
		W	L
REAR ABUTMENT	EXPANSION	16"	9"
PIER 1	EXPANSION	17"	12"
PIER 2	FIXED	15"	12"
PIER 3	EXPANSION	17"	12"
FORWARD ABUTMENT	EXPANSION	16"	9"

DIMENSION A				
REAR ABUTMENT	PIER 1	PIER 2	PIER 3	FORWARD ABUTMENT
3 9/16"±	3 3/16"±	3 3/4"±	3 3/16"±	3 9/16"±

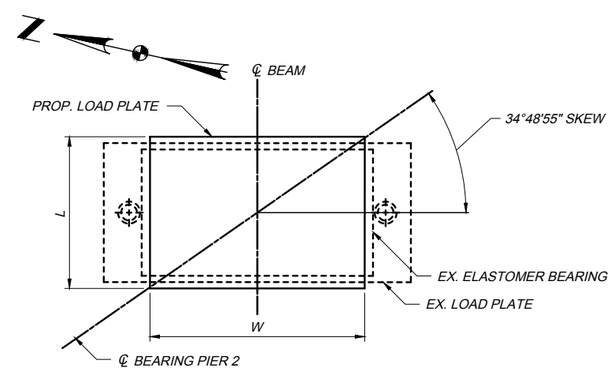

FIXED BEARING PLAN

DESIGN AGENCY
CARPENTER MARTY Transportation
2427 BRECKSVILLE DRIVE CLEVELAND, OHIO 44131
PHONE: (216) 524-8300 FAX: (216) 524-8302

NO.	REVISIONS	BY	DATE
1	ADDENDUM 2	STK	1/12
-	-	-	-
-	-	-	-

DESIGNED	CHECKED
JMV	BWR
DRAWN	IN CHARGE
JMV	STK

BEARING DETAILS
BAGLEY ROAD OVER OHIO TURNPIKE
LORAIN COUNTY
M.P. 152.9

PROJECT 43-24-07
DATE: 11/17/23

OHIO TURNPIKE AND INFRASTRUCTURE COMMISSION

GENERAL SUMMARY PART B			
ITEM NO.	TOTAL	UNIT	DESCRIPTION
			ROADWAY
202	10	FOOT	CURB REMOVED
202	327	FOOT	GUARDRAIL REMOVED
202	162	SQ. YD.	PAVEMENT REMOVED
202	4	EACH	BRIDGE TERMINAL ASSEMBLY REMOVED
204	676	SQ. YD.	SUBGRADE COMPACTION
209	4.0	STA	LINEAR GRADING, AS PER PLAN
254	1946	SQ. YD.	PAVEMENT PLANING, ASPHALT CONCRETE
255	287	FOOT	FULL DEPTH PAVEMENT SAWING
SP 302	49	CU. YD.	ASPHALT CONCRETE BASE, PG 64-22
SP 304	119	CU. YD.	AGGREGATE BASE
SP 402	116	CU. YD.	ASPHALT CONCRETE INTERMEDIATE COURSE OR RECYCLED ASPHALT CONCRETE INTERMEDIATE COURSE, PG76-22
SP 404	88	CU. YD.	ASPHALT CONCRETE SURFACE COURSE, USING CRUSHED SLAG, PG76-22 (FR)
SP 404A	434	FOOT	JOINT SEALER
SPECIAL	147	FOOT	SAWCUT JOINT
407	300	GAL.	NON-TRACKING TACK COAT
601	98	SQ. YD.	TIED CONCRETE BLOCK MAT WITH TYPE 2 UNDERLAYMENT
606	325	FOOT	GUARDRAIL, TYPE MGS WITH LONG STEEL POSTS
606	2	EACH	MGS BRIDGE TERMINAL ASSEMBLY, TYPE 1
606	2	EACH	MGS BRIDGE TERMINAL ASSEMBLY, TYPE 2
609	7	FOOT	CURB, TYPE 4-C
SP 611	2	EACH	CATCH BASIN ADJUSTED TO GRADE
SPECIAL	0.05	MILE	SONIC NAP ALERT PATTERN (SNAP)
SP 627	19	CU. YD.	STONE SHOULDER PROTECTION
659	362	SQ. YD.	SEEDING AND MULCHING
			STRUCTURES
SP 202	1	LUMP	PORTIONS OF STRUCTURE REMOVED, AS PER PLAN
SP 509	180949	POUND	EPOXY COATED REINFORCING STEEL, GRADE 60
509	100	POUND	REINFORCING STEEL, REPLACEMENT OF EXISTING REINFORCING STEEL, AS PER PLAN
SP 511 (QC2)	424	CU. YD.	QC2 CONCRETE, BRIDGE DECK
SP 511 (QC2)	106	CU. YD.	QC2 CONCRETE, ABUTMENT SLAB
SP 511 (QC2)	87	CU. YD.	QC2 CONCRETE, BRIDGE DECK (PARAPETS), AS PER PLAN
511	2	EACH	CONCRETE MISC.: BEARING PEDESTALS (QC1)
SP 514A	1	LUMP	FIELD PAINTING MISC.: PAINT REPAIR/FIELD TOUCH UP, AS PER PLAN
516	1	LUMP	JACKNIG AND TEMPORARY SUPPORT OF SUPERSTRUCTURE, AS PER PLAN
SP 516A	84	LIN. FT	CRACK REPAIR USING EPOXY INJECTION
SP 516B	885	LIN. FT	SEALING OF CONSTRUCTION JOINTS
SP 516G	42	EACH	REPLACE EXPANSION BEARING DEVICE (ABUTMENTS), AS PER PLAN
SP 516G	1	EACH	REPLACE EXPANSION BEARING DEVICE (PIERS), AS PER PLAN
SP 519	290	SQ. FT.	PATCHING CONCRETE STRUCTURES
SP 525A	1	LUMP	HAZARDOUS WASTE COLLECTION, TESTING, AND CLASSIFICATION, AS PER PLAN
SP 525A	1	LUMP	LEAD PAINT REMOVAL - WORKER PROTECTION AND WASTE HANDLING, AS PER PLAN
526	514	SQ. YD.	REINFORCED CONCRETE APPROACH SLAB (T=12")
SP 527	1	LUMP	FALSEWORK, TEMPORARY BRACING AND PROTECTIVE STRUCTURES
SP 533	296	LIN. FT.	THREE (3) INCH CONTINUOUS STRIP SEAL IN STRUCTURAL STEEL JOINT
SP 536	2537	SQ. YD.	CONCRETE WEATHERPROOFING, DECK, ABUTMENT SLABS, AND APPROACH SLABS
SP 536	688	SQ. YD.	CONCRETE WEATHERPROOFING, BARRIERS AND PARAPETS
SP 536	1182	SQ. YD.	CONCRETE WEATHERPROOFING, SUBSTRUCTURE

DESIGN AGENCY
Michael Baker INTERNATIONAL
MICHAEL BAKER INTL.
1111 SUPERIOR AVE.
EAST SUITE 2300,
CLEVELAND, OH 44114
216-687-9000
F 216-687-6532

NO.	REVISIONS	BY	DATE
-	ADDENDUM 2	-	-
-	-	-	-
-	-	-	-

DESIGNED AKA | CHECKED KD
DRAWN AKA | IN CHARGE CDC

GENERAL SUMMARY
OHIO TURNPIKE MAINLINE BRIDGE OVER OHIO TURNPIKE RAMP
LORAIN COUNTY
M.P. 152.1

PROJECT 43-24-07
DATE: 10/06/2023

4
26

OHIO TURNPIKE AND INFRASTRUCTURE COMMISSION

71-22-10_MP152.1_GG001.dwg: 1/12/24 - 9:09am

PROPOSED WORK

OHIO TURNPIKE MAINLINE BRIDGE OVER OHIO TURNPIKE RAMP SHALL BE REHABILITATED UNDER THIS CONTRACT. MAJOR WORK INCLUDES REPLACING THE BRIDGE DECK, ABUTMENT SLABS, APPROACH SLABS, BEARING DEVICES AND DECK JOINTS , MISCELLANEOUS PATCHING OF SUBSTRUCTURE, SEALING OF CONSTRUCTION JOINTS, PERFORMING CONCRETE WEATHERPROOFING, AND MAINTENANCE OF TRAFFIC. DETAILS OF THIS WORK ARE SHOWN IN THE PLANS.

DESIGN SPECIFICATIONS

STANDARD SPECIFICATIONS FOR HIGHWAY BRIDGES ADOPTED BY THE AMERICAN ASSOCIATION OF STATE HIGHWAY AND TRANSPORTATION OFFICIALS, DATED 2002, AND THE OHIO "SUPPLEMENT" TO THESE SPECIFICATIONS.

DESIGN LOADING

DESIGN LOADING: HS 20-44 CASE 1 AND THE ALTERNATE MILITARY LOADING

DESIGN DATA

CONCRETE CLASS QC2 - COMPRESSIVE STRENGTH 4,500 P.S.I.
(SUPERSTRUCTURE)

CONCRETE CLASS QC1 - COMPRESSIVE STRENGTH 4,000 P.S.I. (SUBSTRUCTURE)

REINFORCING STEEL - ASTM A615 OR A996, GRADE 60, MINIMUM YIELD STRENGTH 60,000 PSI

STRUCTURAL STEEL - ASTM A709 GRADE 50 - YIELD STRENGTH 50,000 PSI

DECK PROTECTION METHOD

EPOXY COATED REINFORCING STEEL
2 1/2" CONCRETE COVER

MONOLITHIC WEARING SURFACE

MONOLITHIC WEARING SURFACE IS ASSUMED, FOR DESIGN PURPOSES, TO BE 1" THICK.

EXISTING STRUCTURE VERIFICATION

DETAILS, DIMENSIONS, AND ELEVATIONS SHOWN ON THESE PLANS PERTAINING TO THE EXISTING STRUCTURE HAVE BEEN OBTAINED FROM PLANS OF THE EXISTING STRUCTURE AND/OR FROM FIELD OBSERVATIONS AND MEASUREMENTS. CONSEQUENTLY, THEY ARE INDICATIVE OF THE EXISTING STRUCTURE AND THE PROPOSED WORK BUT THEY SHALL BE CONSIDERED TENTATIVE AND APPROXIMATE. THE CONTRACTOR IS REFERRED TO SECTION 501.02 OF THE SPECIFICATIONS AND OTIC INSTRUCTION TO BIDDERS ARTICLE 2.1 AND GENERAL CONDITIONS ARTICLE 1.5.

CONTRACT BID PRICES SHALL BE BASED UPON A RECOGNITION OF THE UNCERTAINTIES DESCRIBED ABOVE AND UPON A PREBID EXAMINATION OF THE EXISTING STRUCTURE BY THE CONTRACTOR. HOWEVER, ALL PROJECT WORK SHALL BE BASED UPON ACTUAL DETAILS, DIMENSIONS, ELEVATIONS, AND SKEW ANGLES WHICH HAVE BEEN VERIFIED BY THE CONTRACTOR. THE STRUCTURAL STEEL AND STRUCTURAL STEEL DECK JOINTS SHALL NOT BE FABRICATED UNTIL ACTUAL DETAILS, DIMENSIONS, ELEVATIONS, AND SKEW ANGLES HAVE BEEN FIELD VERIFIED BY THE CONTRACTOR.

ANY ADDITIONAL COSTS RESULTING FROM VARIATIONS FROM PLAN DIMENSIONS SHALL BE THE RESPONSIBILITY OF THE CONTRACTOR AND NO ADDITIONAL PAYMENT OVER THE UNIT PRICE BID WILL BE AWARDED BY THE COMMISSION.

UTILITIES

THE CONTRACTOR SHALL EXERCISE DUE CAUTION WHILE PERFORMING WORK ACTIVITIES AROUND EXPOSED UTILITIES. THE CONTRACTOR MUST ENSURE THAT THESE UTILITIES ARE NOT DAMAGED AS A RESULT OF WORK ACTIVITIES OR THE OPERATION OF EQUIPMENT, AND THE CONTRACTOR MAY BE REQUIRED TO PROVIDE TEMPORARY PROTECTIVE OR SUPPORT SYSTEMS IN ORDER TO PREVENT DAMAGE TO UTILITY LINES AND THEIR SUPPORTS DURING STRUCTURE REPAIR OPERATIONS. IF ANY UTILITIES ARE DAMAGED DURING CONSTRUCTION ACTIVITIES, THE CONTRACTOR SHALL IMMEDIATELY NOTIFY THE ENGINEER AND THE APPROPRIATE UTILITY OWNER(S).

REMOVAL

GENERAL:

THE CONTRACTOR SHALL REMOVE THE DESIGNATED PORTIONS OF THE EXISTING STRUCTURE TO THE LIMITS SHOWN ON THE PLANS OR TO THE LIMITS AS DIRECTED BY THE ENGINEER. WHEN SO DIRECTED BY THE ENGINEER, THE CONTRACTOR SHALL WET DOWN THE CONCRETE THOROUGHLY DURING REMOVAL OPERATIONS TO PREVENT SPREAD OF DUST. ALL NECESSARY LABOR, EQUIPMENT AND MATERIAL SHALL BE PROVIDED BY THE CONTRACTOR AND INCLUDED WITH ITEM SP 202, PORTIONS OF STRUCTURE REMOVED, AS PER PLAN, FOR PAYMENT.

CONCRETE REMOVAL:

CONCRETE SHALL BE REMOVED BY MEANS OF APPROVED PNEUMATIC HAMMERS EMPLOYING POINTED AND BLUNT CHISEL EDGED TOOLS AND/OR BY SAW CUTTING THE CONCRETE DECKS AND REMOVING IN SECTIONS.

CARE SHALL BE TAKEN TO ENSURE AGAINST DAMAGE TO THE STEEL AND CONCRETE MEMBERS WHICH ARE TO BE RETAINED AND TO PRESERVE THE BOND OF THE RETAINED REINFORCEMENT TO THE EXISTING CONCRETE. THESE BARS SHALL BE CLEANED OF ALL CONCRETE FRAGMENTS AND FOREIGN MATTER. PNEUMATIC HAMMERS SHALL NOT BE PLACED IN DIRECT CONTACT WITH THE BARS; HAND TOOLS SHALL BE EMPLOYED FOR FINAL CLEANING. DAMAGED AREAS OF REINFORCEMENT THAT ARE TO REMAIN SHALL BE CUT AND STRESS TRANSFER ACCOMPLISHED BY EITHER A LAPPED OR MECHANICAL SPLICE. ANY ADDITIONAL REINFORCEMENT OR MECHANICAL SPLICES SHALL BE PROVIDED BY THE CONTRACTOR AT NO ADDITIONAL COST TO THE COMMISSION. OTHER EXISTING REINFORCEMENT WITHIN THE REMOVAL LIMITS SHALL BE REMOVED AND DISPOSED OF.

CLEANING ABUTMENT BEAM SEATS:

WORK SHALL CONSIST OF REMOVAL OF DIRT, SAND, SOIL, PAPER, GLASS, CANS, AND OTHER DEBRIS FROM DRAINAGE SYSTEMS AND ABUTMENT SEATS. EQUIPMENT MAY CONSIST OF HAND TOOLS, MANUAL BROOMS, POWER BROOMS, AIR COMPRESSORS, WATER TANKS, WATER PUMPS WITH ASSOCIATED DELIVERY HARDWARE TO CLEAN, FLUSH, AND REMOVE DIRT AND DEBRIS. THE FOLLOWING AREAS OF THE BRIDGE ARE TO BE CLEANED:

ABUTMENT BEAM SEAT GUTTER AND DRAINS.

SUBMIT A BRIDGE CLEANING PLAN PRIOR TO WORK IDENTIFYING PROPOSED METHODS AND ANY REQUIRED CONTAINMENT OR TEMPORARY BMP'S ASSOCIATED WITH WASH WATERS.

DISPOSAL OF REMOVED MATERIAL:

THE CONTRACTOR SHALL NOT PERMIT ANY REMOVED MATERIAL TO DROP TO THE GROUND. MEANS SHALL BE PROVIDED FOR CATCHING REMOVED MATERIAL. THE CONTRACTOR SHALL SUBMIT TO THE ENGINEER FOR APPROVAL DETAILS OF THE METHODS TO BE USED FOR REMOVING AND COLLECTING THE MATERIAL. ALL CONCRETE, STEEL, REINFORCING STEEL, ASPHALT, ETC. REMOVED FROM THE STRUCTURE, UNLESS SPECIFIED, SHALL BECOME THE PROPERTY OF THE CONTRACTOR AND SHALL BE PROMPTLY REMOVED BY HIM FROM THE SITE.

UNDER NO CIRCUMSTANCES SHALL THE MATERIAL BE PERMITTED TO REMAIN ON THE PREMISES, RIGHT OF WAY OR STREETS PENDING DISPOSAL OF SAME OR FOR ANY OTHER PURPOSES, UNLESS OTHERWISE SPECIFIED BY THE ENGINEER

CUTTING OR BENDING OF REINFORCING BARS

ANY CUTTING OR BENDING OF BARS NECESSARY TO ACCOMMODATE ANY ESSENTIAL ELEMENT OF WORK RELATED TO THE PROJECT, SHALL BE INCLUDED IN THE UNIT PRICE BID FOR ITEM 509 REINFORCING STEEL, REPLACEMENT OF EXISTING REINFORCING STEEL AND/OR ITEM SP 509 EPOXY COATED REINFORCING STEEL UNLESS OTHERWISE NOTED.

DIMENSIONS

DIMENSIONS GIVEN ARE MEASURED HORIZONTALLY AND AT 60° F UNLESS OTHERWISE NOTED. DIMENSIONS GIVEN FOR THE EXISTING STRUCTURE ARE FROM THE ORIGINAL CONSTRUCTION PLANS. SOME VARIATION FROM PLAN DIMENSIONS ARE EXPECTED. THE CONTRACTOR SHALL BE RESPONSIBLE FOR PROPER FIT-UP BETWEEN THE PROPOSED AND EXISTING CONSTRUCTION. ADEQUATE MEASUREMENTS SHALL BE MADE IN THE FIELD PRIOR TO THE FABRICATION OR INSTALLATION OF ANY PART TO ENSURE THAT ALL PARTS CAN BE PROPERLY ASSEMBLED AS SPECIFIED IN THE PLANS. ANY ADDITIONAL COST RESULTING FROM VARIATIONS FROM PLAN DIMENSIONS IS THE RESPONSIBILITY OF THE CONTRACTOR AND NO ADDITIONAL PAYMENT WILL BE AWARDED BY THE COMMISSION.

REPAIR OF EXISTING CONCRETE ELEMENTS

EXISTING REINFORCED CONCRETE STRUCTURE ELEMENTS WHICH ARE INCORPORATED IN THIS CONSTRUCTION PROJECT ARE TO BE MODIFIED AND/OR REPAIRED. A CONDITION SURVEY WAS PERFORMED IN MARCH 2023. REPAIR AREAS WERE DETERMINED BY VISUAL INSPECTION. THE STRUCTURAL ELEMENTS INSPECTED INCLUDE THE BEAMS AND SUBSTRUCTURES. THE RECORDS OF THIS INSPECTION ARE THE BASIS FOR THE REPAIR RECOMMENDATIONS AS DETAILED IN THE PLANS.

ITEM 509 - REINFORCING STEEL, REPLACEMENT OF EXISTING REINFORCING STEEL, AS PER PLAN

REPLACE ALL EXISTING REINFORCING BARS DEEMED BY THE ENGINEER TO BE UNUSABLE BECAUSE OF CORROSION. THE COMMISSION WILL MEASURE THE REPLACEMENT REINFORCING STEEL BY THE NUMBER OF POUNDS ACCEPTED IN PLACE. AN ESTIMATED QUANTITY OF 100 POUNDS HAS BEEN INCLUDED FOR THIS WORK. REPLACE ALL EXISTING REINFORCING STEEL BARS WHICH ARE TO BE INCORPORATED INTO THE NEW WORK AND ARE DEEMED BY THE ENGINEER TO BE MADE UNUSABLE BY REMOVAL OPERATIONS WITH NEW EPOXY COATED REINFORCING STEEL OF THE SAME SIZE AT NO COST TO THE COMMISSION

ITEM SP 536 - CONCRETE WEATHERPROOFING

ITEM SP 536 - CONCRETE WEATHERPROOFING SHALL BE APPLIED TO THE FOLLOWING NEW EXPOSED CONCRETE SURFACES OF THE BRIDGE:

- THE TOP OF NEW ABUTMENT SLABS AND NEW SUPERSTRUCTURE SLABS.
- ALL NEW PARAPET SURFACES AND SLAB SIDE EDGES.
- THE BOTTOM SURFACE OF THE NEW SUPERSTRUCTURE SLAB FROM THE SLAB SIDE EDGE TO THE EXTERIOR STRINGER FLANGE.
- ALL EXPOSED CONCRETE SURFACES OF ALL ABUTMENTS AND PIERS. SEALING SHALL NOT BE DONE UNTIL ALL CONCRETE PATCHING REPAIRS HAVE BEEN COMPLETED AND CURED.

CARE SHALL BE TAKEN NOT TO APPLY WEATHERPROOFING ON CONSTRUCTION JOINT SURFACES, SURFACES TO RECEIVE JOINT SEALER OR FASCIA BEAM PAINT.

CONCRETE PARAPETS

DEFLECTION JOINTS:

DEFLECTION JOINTS SHALL BE CONSTRUCTED BY SAWING THE CONCRETE AFTER IT HAS TAKEN ITS INITIAL SET AND BEFORE ANY CRACKS DEVELOP. THE USE OF AN EDGE GUIDE, FENCE OR JIG SHALL BE USED TO ENSURE THAT THE CUT JOINTS SHALL BE STRAIGHT, TRUE AND ALIGNED ON BOTH FACES OF THE PARAPET. THE JOINT SHALL BE THE WIDTH OF THE SAW BLADE, NOT TO EXCEED ONE QUARTER (0.25) INCH, AND SHALL BE ONE AND ONE-HALF (1.5) INCHES DEEP. THE SAW CUT SHALL BE MADE IN THE COMPLETE CIRCUMFERENCE OF THE PARAPET, STARTING AND ENDING AT THE ELEVATION OF THE CONCRETE DECK, EXCEPT AS NOTED ON THE PLANS AND SHALL BE CAULKED WITH A ONE (1) INCH THICKNESS OF MATERIAL CONFORMING TO FEDERAL SPECIFICATION TT-S-00227E. THE BOTTOM HALF (0.5) INCH OF THE SAWED JOINT AT THE OUTSIDE FACE OF THE PARAPET SHALL BE LEFT UNSEALED TO ALLOW ANY WATER WHICH MAY ENTER THE JOINT TO ESCAPE.

PARAPET FORMS:

FORMS FOR THE BRIDGE PARAPETS AND SLAB EDGES SHALL BE IN ACCORDANCE WITH 508.02 OF THE SPECIFICATIONS AND THE FOLLOWING:

WHEN WOOD FORMS ARE USED THEY SHALL PROVIDE A SMOOTH SURFACE OF UNIFORM TEXTURE AND COLOR SUBSTANTIALLY EQUAL TO THAT WHICH WOULD BE OBTAINED WITH THE USE OF NEW PLYWOOD CONFORMING TO THE NATIONAL INSTITUTE OF STANDARDS AND TECHNOLOGY PRODUCT STANDARD PSI FOR EXTERIOR B-B CLASS I PLYWOOD.

FORMS SHALL BE OF A CONSTRUCTION WHICH WOULD ALLOW FOR THEIR REMOVAL WITHIN 24 HOURS OF THE CONCRETE PLACEMENT WITHOUT CAUSING DAMAGE TO THE CONCRETE.

CONSTRUCTION JOINTS

CONSTRUCTION JOINT SURFACES SHALL BE FREE FROM OIL, LAITANCE, FORM RELEASE AGENT, OR ANY OTHER MATERIAL THAT WOULD PREVENT BONDING TO THE CONCRETE SURFACE. ALL LAITANCE AND OTHER CONTAMINANTS SHALL BE REMOVED BY HIGH PRESSURE WATER BLASTING WITH A MINIMUM PRESSURE OF 5,000 P.S.I. HOWEVER, WATER BLASTING SHALL NOT BE REQUIRED WHERE EXISTING CONCRETE HAS BEEN ROUGHENED BY JACKHAMMERS DURING CONCRETE REMOVAL OPERATIONS. SURFACES SHALL BE THOROUGHLY DRENCHED WITH CLEAN WATER AND ALLOWED TO DRY TO A DAMP CONDITION FREE OF STANDING WATER BEFORE PLACING CONCRETE. PREPARATION OF CONSTRUCTION JOINT SURFACES SHALL NOT BE MEASURED FOR PAYMENT. THE COST THEREOF SHALL BE INCLUDED IN THE CONTRACT PRICE OF THE PERTINENT CONCRETE ITEMS.

WELD ATTACHMENTS

WELD ATTACHMENT OF SUPPORTS FOR CONCRETE DECK FINISHING MACHINE TO AREAS OF THE FASCIA STRINGER FLANGES DESIGNATED "COMPRESSION". DO NOT WELD ATTACHMENTS TO AREAS DESIGNATED "TENSION". FILLET WELDS TO COMPRESSION FLANGES SHALL BE AT LEAST 1" FROM EDGE OF FLANGE, BE NO MORE THAN 2" LONG, AND BE AT LEAST ¼" FOR THICKNESSES UP TO ¾" OR 5/16" FOR GREATER THAN ¾" THICK.

EXISTING RIGHT OF WAY FENCE

IT IS THE INTENT OF THE PROJECT FOR THE EXISTING RIGHT OF WAY FENCE NEAR THE BRIDGE TO REMAIN, HOWEVER IF THE CONTRACTOR DEEMS IT NECESSARY TO REMOVE THE FENCE FOR HIS OPERATIONS AS APPROVED BY THE ENGINEER, THE CONTRACTOR SHALL CAREFULLY REMOVE THE FENCE AND REINSTALL THE FENCE IN ACCORDANCE WITH ITEM 607. IF THE FENCE BECOMES DAMAGED DUE TO THE CONTRACTORS OPERATIONS THE FENCE SHALL BE REPLACED AT NO COST TO THE COMMISSION.

ALL LABOR, MATERIALS, EQUIPMENT AND INCIDENTALS NECESSARY TO COMPLETE THE WORK SHALL BE CONSIDERED INCIDENTAL TO THE PROJECT AND NO ADDITIONAL COMPENSATION SHALL BE GRANTED.

DECK SLAB CONCRETE QUANTITY

THE ESTIMATED QUANTITY OF DECK SLAB CONCRETE IS BASED ON THE CONSTANT DECK SLAB THICKNESS, AS SHOWN, PLUS THE QUANTITY OF CONCRETE THAT FORMS EACH BEAM/GIRDER HAUNCH. THE ESTIMATE ASSUMES A CONSTANT HAUNCH THICKNESS OF 2 INCHES AND A CONSTANT HAUNCH WIDTH EQUAL TO THE TOP FLANGE WIDTH. DEVIATE FROM THIS HAUNCH THICKNESS AS NECESSARY TO PLACE THE DECK SURFACE AT THE FINISHED GRADE. THE HAUNCH THICKNESS WAS MEASURED AT THE CENTERLINE OF THE BEAM/GIRDER, FROM THE SURFACE OF THE DECK TO THE BOTTOM OF THE TOP FLANGE MINUS THE DECK SLAB THICKNESS. THE AREA OF ALL EMBEDDED STEEL PLATES HAS BEEN DEDUCTED FROM THE HAUNCH QUANTITY IN ACCORDANCE WITH 511.23.

PROTECTION OF TRAFFIC

THE CONTRACTOR SHALL SUBMIT A PLAN TO PROTECT THE TRAVELING PUBLIC FROM ALL REMOVAL DEBRIS AND/OR CONSTRUCTION MATERIAL THAT MAY COME IN CONTACT OR POSE A DANGER TO THE TRAVELING PUBLIC. SLURRY AND/OR WASTE SHALL NOT BE PERMITTED TO FLOW ONTO OPEN LANES OF TRAFFIC OR INTO STORM SEWERS. THE CONTRACTOR MAY PERFORM THE WORK DURING A WEEKEND, IN ACCORDANCE WITH SP 104. THE PLAN MUST BE SUBMITTED TO THE COMMISSION AND GOVERNING LOCAL AGENCIES PRIOR TO COMMENCEMENT OF WORK.

DECK REMOVALS - COMPOSITE DECK DESIGNS - STEEL SUPERSTRUCTURES

DUE TO THE PRESENCE OF WELDED STUDS TO THE EXISTING STRUCTURAL STEEL, SUBMIT A DETAILED PROCEDURE OF THE DECK REMOVAL WITH THE ENGINEERED DRAWINGS ACCORDING TO C&MS 501.05. ACCEPTANCE BY THE COMMISSION IS NOT REQUIRED. THE PROCEDURE SHALL INCLUDE ALL DETAILS, EQUIPMENT AND METHODS TO BE USED FOR REMOVAL OF THE CONCRETE OVER THE FLANGES AND AROUND THE STUDS. REPLACE OR REPAIR MAIN STEEL AND STUDS DAMAGED BY THE REMOVAL OPERATIONS AT NO COST TO THE PROJECT. AT LEAST 7 DAYS BEFORE PERFORMING REPAIR WORK, SUBMIT A PROPOSED REPAIR PLAN ACCORDING TO C&MS 501.05.C TO THE ENGINEER TO REPLACE OR REPAIR STRUCTURAL STEEL AND STUDS DAMAGED BY THE REMOVAL OPERATIONS. THE COMMISSION WILL NOT PAY FOR DAMAGE REPAIRS. 2

DECK PLACEMENT DESIGN ASSUMPTIONS

THE FOLLOWING ASSUMPTIONS OF CONSTRUCTION MEANS AND METHOD WERE MADE FOR THE ANALYSIS AND DESIGN OF THE SUPERSTRUCTURE. THE CONTRACTOR IS RESPONSIBLE FOR THE DESIGN OF THE FALSEWORK SUPPORT SYSTEM WITHIN THESE PARAMETERS AND WILL ASSUME RESPONSIBILITY FOR SUPERSTRUCTURE ANALYSIS FOR DEVIATION FROM THESE DESIGN ASSUMPTIONS.

AN EIGHT WHEEL FINISHING MACHINE WITH A MAXIMUM WHEEL LOAD OF 2.45 KIPS.

A MINIMUM OUT-TO-OUT WHEEL SPACING AT EACH END OF THE FINISHING MACHINE OF 103 INCHES.

A MAXIMUM SPACING OF OVERHANG BRACKETS OF 48 INCHES.

A MAXIMUM DISTANCE FROM THE CENTERLINE OF FASCIA GIRDER TO THE FACE OF THE SAFETY HANDRAIL OF 70 INCHES.

IT IS ANTICIPATED TEMPORARY BLOCKING AND TIES WILL BE NECESSARY AT FASCIA AND TEMPORARY MAINTENANCE OF TRAFFIC OVERHANGS AS SHOWN ON SHEET 23/26.

DESIGN AGENCY
Michael Baker INTERNATIONAL
MICHAEL BAKER INTL
11312 MIDDLEBELT RD.
EAST, SUITE 200
GARFIELD HTS, OHIO
O:216-644-0483
F:216-464-6032

NO.	REVISIONS	BY	DATE
-	ADDENDUM 2	-	-
-	-	-	-
-	-	-	-

DESIGNED	CHECKED
TJH	CDC
DRAWN	IN CHARGE
TJH	CDC

STRUCTURE GENERAL NOTES (1 OF 2)
OHIO TURNPIKE MAINLINE BRIDGE OVER OHIO TURNPIKE RAMP
M.P. 152.1 LORAIN COUNTY

PROJECT 43-24-07
DATE: 10/06/2023

1 / 20

7 / 26

OHIO TURNPIKE AND INFRASTRUCTURE COMMISSION

71-21-10_RAMP_STRUCTURE GENERAL NOTES (1 OF 2).dwg: 1/11/24 - 6:08pm

ITEM SP 514A - FIELD PAINTING MISC.: PAINT REPAIR/FIELD TOUCH UP, AS PER PLAN

THIS WORK CONSISTS OF THE FIELD TOUCH-UP AND REPAIR OF EXISTING PAINT THAT HAS BEEN DAMAGED DUE TO REQUIRED STRUCTURAL STEEL WORK SUCH AS THE TRIMMING OF BEAM ENDS, REMOVAL OF EXISTING BEARINGS, REMOVAL OF EXISTING LOAD PLATES, AND ANY OTHER STRUCTURAL STEEL WORK REQUIRING THE REMOVAL OF EXISTING PAINT.

ALL WORK SHALL BE IN ACCORDANCE WITH THE PROVISIONS OF SP 514A EXCEPT ALL ITEMS LISTED UNDER SECTION 4.02 - BASIS OF PAYMENT SHALL BE INCLUDED IN THE LUMP SUM BID PRICE FOR:

ITEM	DESCRIPTION	UNIT
SP 514A	FIELD PAINTING MISC.: PAINT REPAIR/ TOUCH-UP, AS PER PLAN	LUMP

ITEM 516 - JACKING AND TEMPORARY SUPPORT OF SUPERSTRUCTURE, AS PER PLAN

THIS WORK CONSISTS OF RAISING OR RE-POSITIONING EXISTING STRUCTURES TO THE DIMENSIONS AND REQUIREMENTS DEFINED IN THE PROJECT PLANS.

JACKING SHALL BE PERFORMED TO RAISE THE BRIDGE UNIFORMLY IN ORDER TO MINIMIZE INDUCED STRESSES INTO THE SUPERSTRUCTURE. THE MAXIMUM DIFFERENTIAL ELEVATION CHANGE BETWEEN ADJACENT SUPERSTRUCTURE MEMBERS IS ¼ - INCH AS MEASURED AT OPPOSITE ENDS OF THE SAME CROSS-FRAME MEMBER. THE MAXIMUM DIFFERENTIAL ELEVATION CHANGE BETWEEN ADJACENT BEARINGS OF THE SAME SUPERSTRUCTURE MEMBER IS 1-INCH. PERFORM WORK IN ACCORDANCE WITH C&MS 501.05.B.5. THE SUPERSTRUCTURES SHALL NOT BE RAISED MORE THAN NECESSARY TO ACCOMPLISH THE WORK. ANY DAMAGE TO STRUCTURAL MEMBERS, CONNECTIONS, OR PARTS THAT ARE TO REMAIN AS PART OF THE PERMANENT CONSTRUCTION SHALL BE CORRECTED AND/OR REPAIRED BY THE CONTRACTOR AT THE CONTRACTOR'S EXPENSE AND TO THE SATISFACTION OF THE CHIEF ENGINEER.

SUBMIT ENGINEERED DRAWINGS TO THE CHIEF ENGINEER'S PROJECT REPRESENTATIVE FOR JACKING AND TEMPORARY SUPPORT IN ACCORDANCE WITH C&MS 501.05. THE SUBMITTAL SHALL INCLUDE CALCULATIONS AND ALL DETAILS OF THE PROPOSED TEMPORARY SUPPORT AND JACKING SYSTEM, INDICATING MATERIALS, MEMBER SIZES, SPACING, SUPPORT LOCATIONS, JACKING POINTS, REACTIONS, AND REMOVAL PROCEDURES.

IF, DURING THE JACKING OPERATIONS, CRACKING OF THE CONCRETE SUPERSTRUCTURE, SEPARATION OF THE CONCRETE DECK FROM THE STEEL STRINGERS, OR OTHER DAMAGE TO THE STRUCTURE IS VISUALLY OBSERVED, IMMEDIATELY CEASE THE JACKING OPERATION AND INSTALL SUPPORTS TO THE SATISFACTION OF THE ENGINEER. ANALYZE THE DAMAGE AND SUBMIT A METHOD OF CORRECTION TO THE ENGINEER FOR APPROVAL. EPOXY INJECT ALL BEAMS THAT SEPARATE FROM THE DECK FOR THE DISTANCE OF THE SEPARATION IN ACCORDANCE WITH C&MS 512.07. THE COMMISSION WILL NOT PAY FOR THE COST OF THIS EPOXY INJECTION OR OTHER REQUIRED REPAIRS. THE BRIDGE BEARINGS SHALL BE FULLY SEATED AT ALL CONTACT AREAS. IF FULL SEATING IS NOT ATTAINED, SUBMIT A REPAIR PLAN TO THE ENGINEER. THE COMMISSION WILL NOT PAY FOR THE REPAIR COSTS TO ENSURE FULL SEATING ON BEARINGS.

THE COMMISSION WILL PAY FOR THE ACCEPTED QUANTITIES AT THE CONTRACT UNIT PRICE FOR:

ITEM	DESCRIPTION	UNIT
516	JACKING AND TEMPORARY SUPPORT OF SUPERSTRUCTURE, AS PER PLAN	LUMP

AND SHALL INCLUDE ALL LABOR, EQUIPMENT, MATERIALS, AND INCIDENTALS NECESSARY TO COMPLETE THIS WORK AS DESCRIBED ABOVE.

ITEM SP 516G - REPLACE EXPANSION BEARING DEVICE (ABUTMENTS), AS PER PLAN
ITEM SP 516G - REPLACE EXPANSION BEARING DEVICE (PIERS), AS PER PLAN

THIS WORK SHALL CONFORM TO THE BEARING DETAILS AS PROVIDED IN THE PLANS AND THE SPECIAL PROVISION SP 516G EXCEPT THAT SEPARATE PAYMENT WILL BE MADE FOR THE FOLLOWING ITEMS:

ITEM	DESCRIPTION	UNIT
SP 514A	FIELD PAINTING MISC: PAINT REPAIR/ TOUCH-UP, AS PER PLAN	LUMP
516	JACKING AND TEMPORARY SUPPORT OF SUPERSTRUCTURE, AS PER PLAN	LUMP
SP 525A	LEAD PAINT REMOVAL- WORKER/ENVIRONMENTAL PROTECTION AND WASTE HANDLING, AS PER PLAN	LUMP

ITEM SP 525A - HARZARDOUS WASTE COLLECTION, TESTING AND CLASSIFICATION, AS PER PLAN

THIS WORK CONSISTS OF THE COLLECTION, TESTING, AND CLASSIFICATION OF EXISTING PAINT SAMPLES ON EXISTING STRUCTURES REQUIRING STRUCTURAL STEEL WORK SUCH AS THE TRIMMING OF BEAM ENDS, REMOVAL OF EXISTING BEARINGS, REMOVAL OF EXISTING LOAD PLATES, AND ANY OTHER STRUCTURAL STEEL WORK REQUIRING THE REMOVAL OF EXISTING PAINT WHERE THE CLASSIFICATION IS UNKNOWN. THIS ITEM SHALL BE PERFORMED PER THE REQUIREMENTS SP 525A: SECTION 3.06 D. – WASTE SAMPLING, TESTING, AND CLASSIFICATION AND COMPLETED PRIOR TO COMMENCING ANY STRUCTURAL STEEL WORK. AT LEAST TWO SAMPLES PER BRIDGE WILL BE REQUIRED TO DETERMINE THE EXISTING PAINT HAZARDOUS WASTE CLASSIFICATION. LOCATIONS OF THE SAMPLE COLLECTION WILL BE AS DIRECTED BY THE ENGINEER.

ITEM	DESCRIPTION	UNIT
SP 525A	HAZARDOUS WASTE COLLECTION, TESTING AND CLASSIFICATION, AS PER PLAN	LUMP

ITEM SP 525A - LEAD PAINT REMOVAL - WORKER PROTECTION AND WASTE HANDLING, AS PER PLAN

THIS WORK CONSISTS OF THE REMOVAL OF EXISTING PAINT THAT HAS BEEN TESTED AND CLASSIFIED AS A HAZARDOUS WASTE PER 525A SECTION 3.06 D.5. PAINT REMOVAL FOR THIS ITEM INCLUDES STRUCTURAL STEEL WORK SUCH AS THE TRIMMING OF BEAM ENDS, REMOVAL OF EXISTING BEARINGS, REMOVAL OF EXISTING LOAD PLATES, AND ANY OTHER STRUCTURAL STEEL WORK REQUIRING THE REMOVAL OF EXISTING HAZARDOUS PAINT. ALL WORK SHALL BE IN ACCORDANCE WITH THE PROVISIONS OF SP 525A EXCEPT ALL ITEMS LISTED UNDER SECTION 4.02 - BASIS OF PAYMENT SHALL BE INCLUDED IN THE LUMP SUM BID PRICE FOR:

ITEM	DESCRIPTION	UNIT
SP 525A	LEAD PAINT REMOVAL - WORKER/ENVIRONMENTAL PROTECTION AND WASTE HANDLING, AS PER PLAN	LUMP

ENTIRE SHEET 2

71-21-10_RAMP_STRUCTURE GENERAL NOTES (2 OF 2).dwg: 1/12/24 - 8:05am

DESIGN AGENCY
MICHAEL BAKER INTL
111 MONUMENT CIRCLE, EAST, SUITE 2300
INDIANAPOLIS, INDIANA 46204
P:317.804.8000 F:317.804.8114
Michael Baker INTERNATIONAL
C:216-644-6483
F:216-464-6032

NO.	REVISIONS	BY	DATE
-	ADDENDUM 2	-	-
-	-	-	-
-	-	-	-

DESIGNED	CHECKED
TJH	CDC
DRAWN	IN CHARGE
TJH	CDC

STRUCTURE GENERAL NOTES (2 OF 2)
OHIO TURNPIKE MAINLINE BRIDGE OVER OHIO TURNPIKE RAMP
M.P. 152.1 LORAIN COUNTY

PROJECT 43-24-07
DATE: 10/06/2023

1A/20

7A/26

OHIO TURNPIKE AND INFRASTRUCTURE COMMISSION