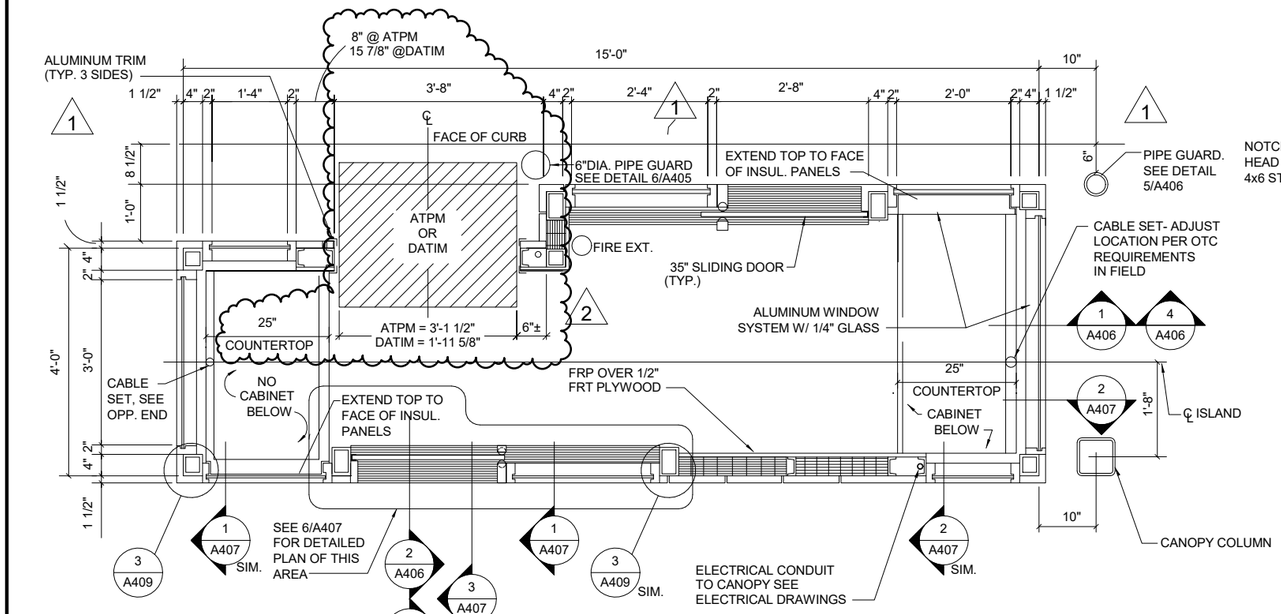

PLAN AT WINDOW LEVEL (1/A405)
SCALE: 3/8" = 1'-0"

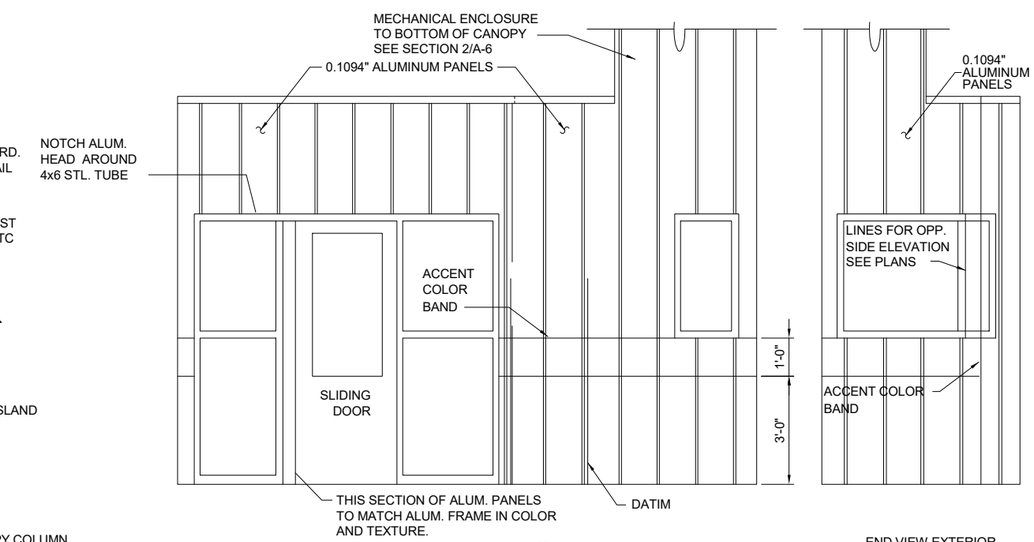

BOOTH ELEVATIONS (2/A405)
SCALE: 3/16" = 1'-0"

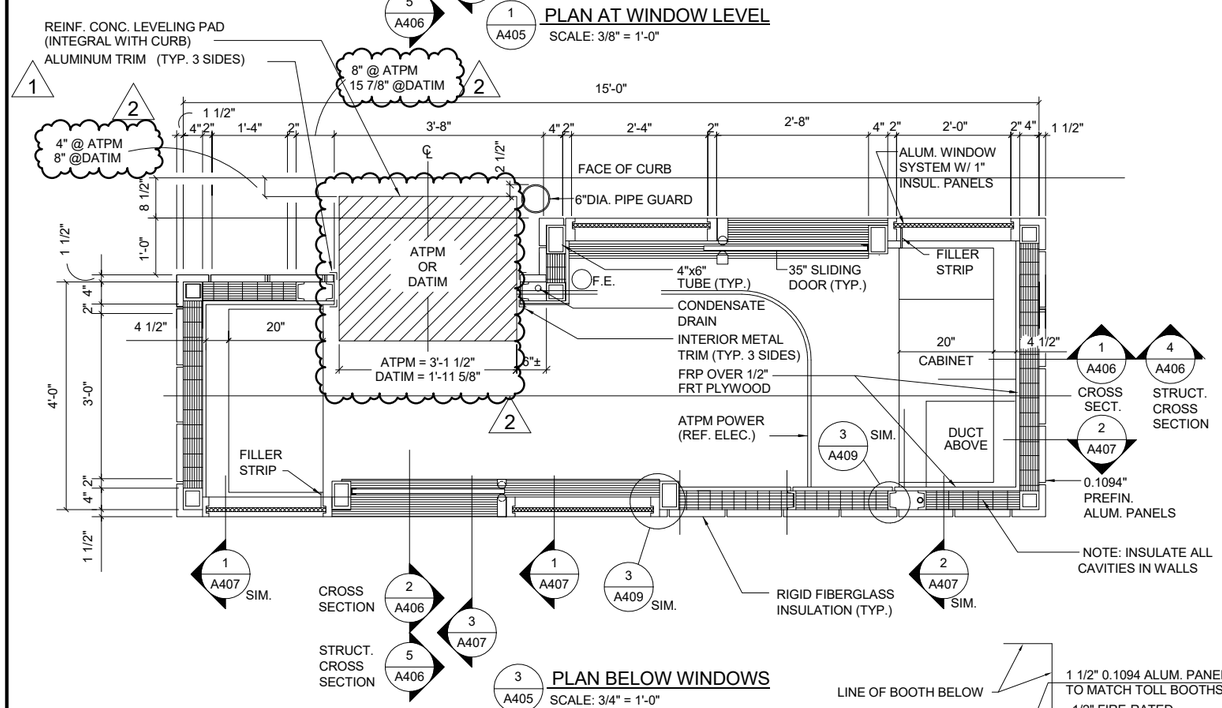

PLAN BELOW WINDOWS (3/A405)
SCALE: 3/4" = 1'-0"

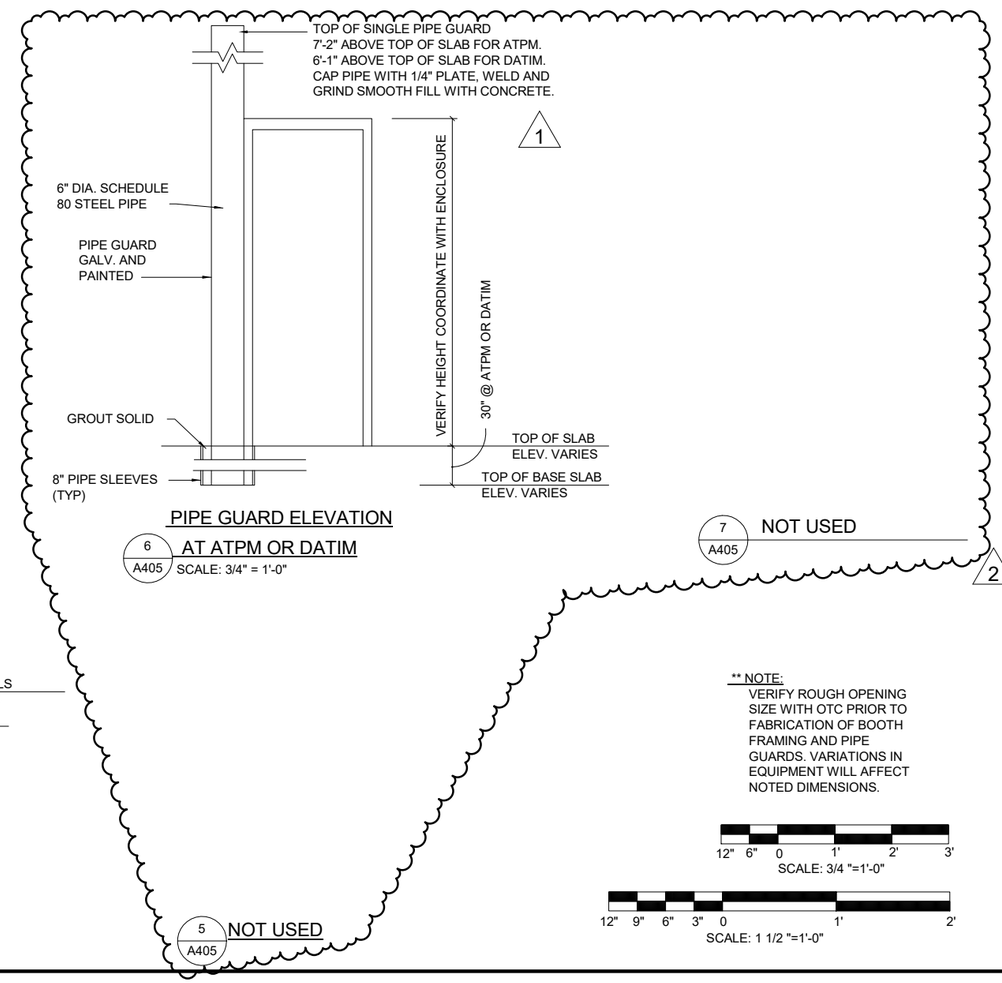

PIPE GUARD ELEVATION AT ATPM OR DATIM (6/A405)
SCALE: 3/4" = 1'-0"

NOTES:
1. THE NORTH PLAZA HAS FIVE (5) BOOTHS WITH ATPMS.
2. THE SOUTH PLAZA HAS THREE (3) BOOTHS WITH DATIMS.

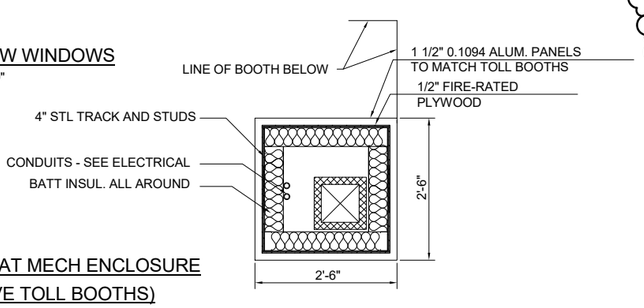

PLAN AT MECH ENCLOSURE (ABOVE TOLL BOOTHS)
NO SCALE

** NOTE:
VERIFY ROUGH OPENING SIZE WITH OTC PRIOR TO FABRICATION OF BOOTH FRAMING AND PIPE GUARDS. VARIATIONS IN EQUIPMENT WILL AFFECT NOTED DIMENSIONS.

SCALE: 3/4 "=1'-0"

SCALE: 1 1/2 "=1'-0"

DESIGN AGENCY
PRIME AE
540 White Pond Drive, Ste. E
Akron, Ohio 44320
(330)-864-7755

NO.	REVISIONS	BY	DATE
1	ADDENDUM 3	MM	5/15/2020
2	ADDENDUM 5		5/21/2020

DESIGNED MWM | CHECKED MWM | DRAWN MAK | IN CHARGE CAR

TOLL BOOTH PLAN AND ELEVATIONS
LUCAS COUNTY
TOLL PLAZA 49

PROJECT 58-20-01
DATE: 4/10/2020

A405

92 / 202

OHIO TURNPIKE AND INFRASTRUCTURE COMMISSION

5/20/2020 2:13:09 PM
TOLL PLAZA 49

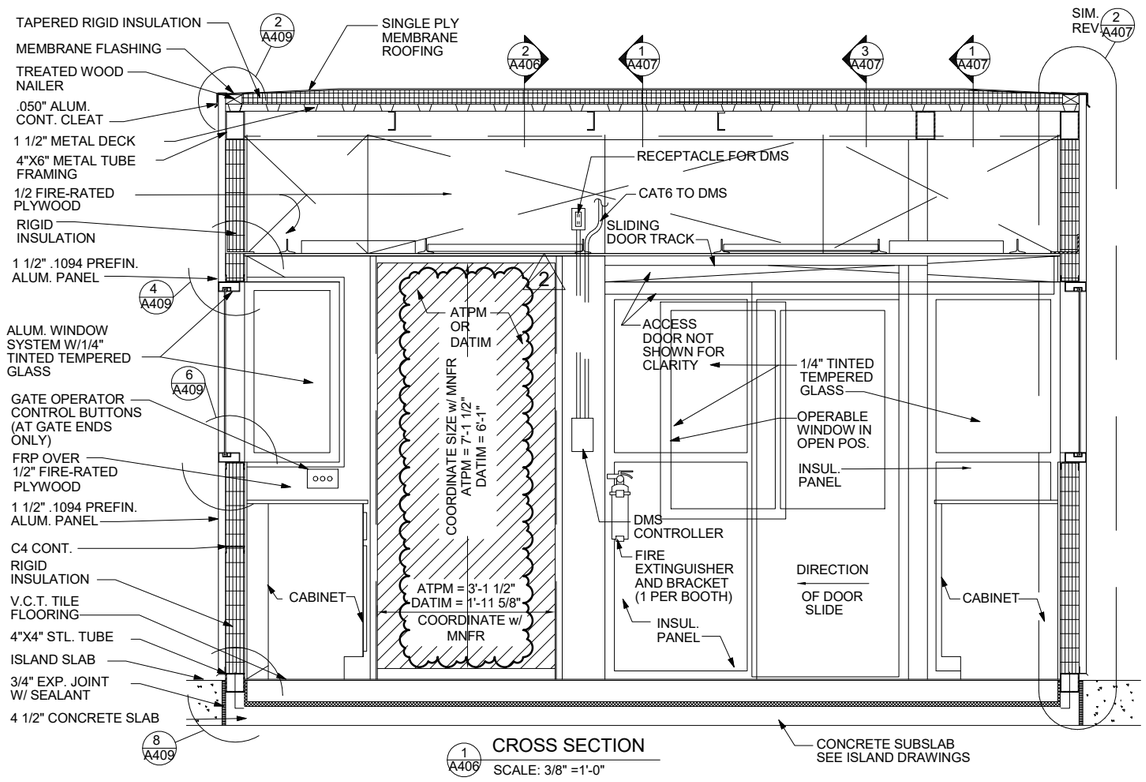

1 A406 CROSS SECTION
SCALE: 3/8" =1'-0"

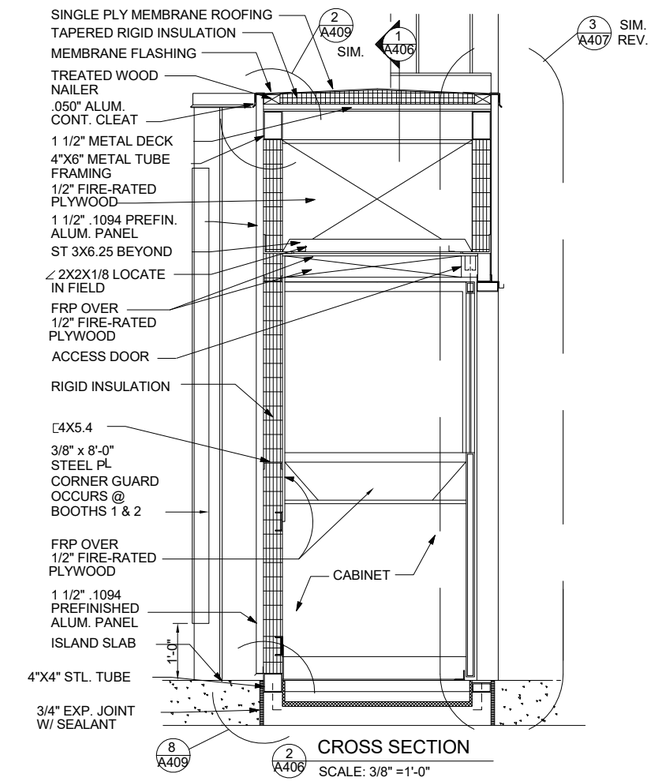

8 A409 2 A406 CROSS SECTION
SCALE: 3/8" =1'-0"

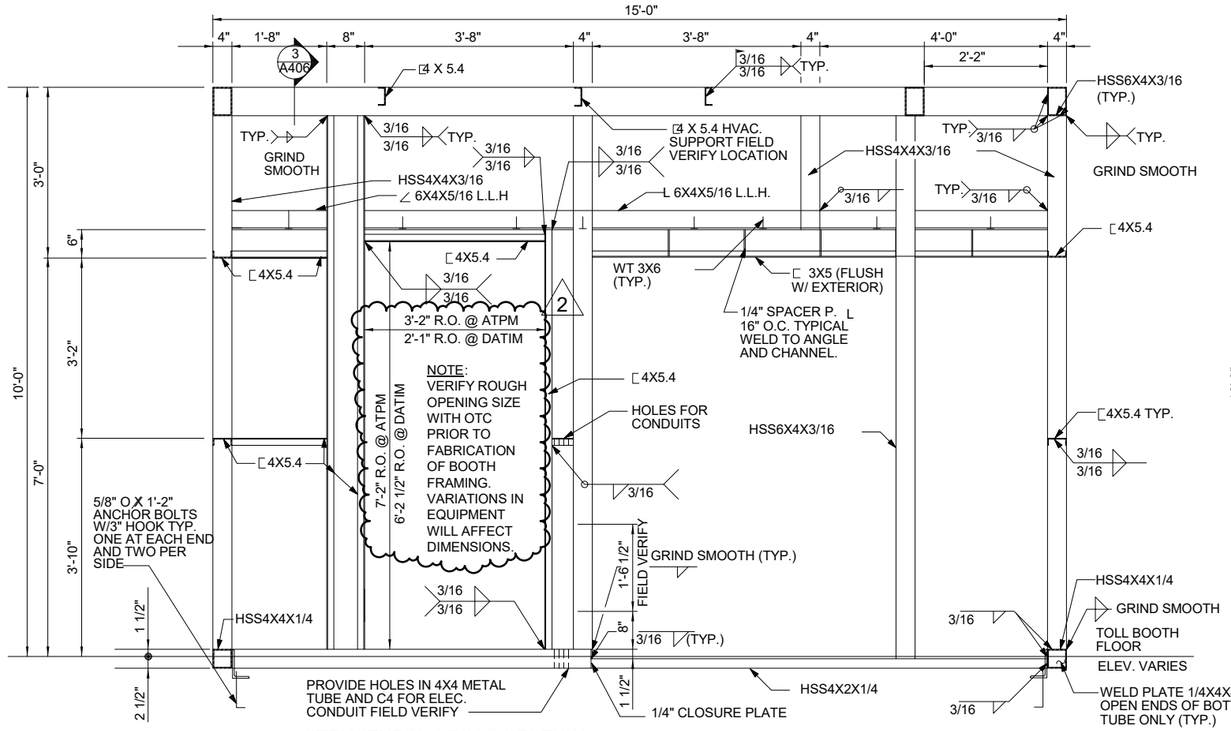

4 A406 STRUCTURAL CROSS SECTION
SCALE: 3/8" =1'-0"

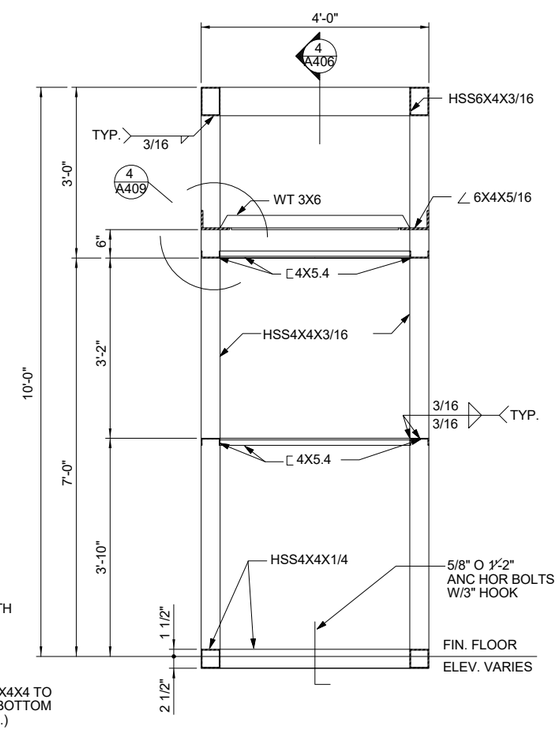

3 A406 STRUCTURAL CROSS SECTION
SCALE: 3/8" =1'-0"

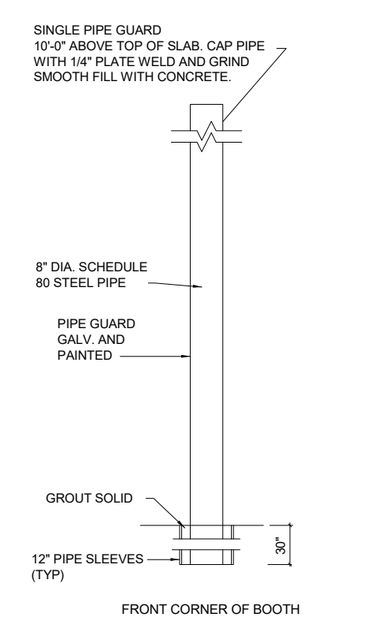

5 A406 8" PIPE GUARD DETAIL
SCALE: 3/8" =1'-0"

12" 6" 0 1' 2' 3'
SCALE: 3/8 "=1'-0"

1

DESIGN AGENCY
PRIME AE
540 White Pond Drive, Ste. E
Akron, Ohio 44320
(330)-864-7755

NO.	REVISIONS	BY	DATE
1	ADDENDUM 3	MM	5/15/2020
2	ADDENDUM 5		5/21/2020

DESIGNED MWM
CHECKED MWM
DRAWN MAK
IN CHARGE CAR

TOLL BOOTH SECTIONS
TOLL PLAZA 49
LUCAS COUNTY

PROJECT 58-20-01
DATE: 4/10/2020

A406

93
202

OHIO TURNPIKE AND INFRASTRUCTURE COMMISSION

TOLL PLAZA 49 5/20/2020 2:17:22 PM

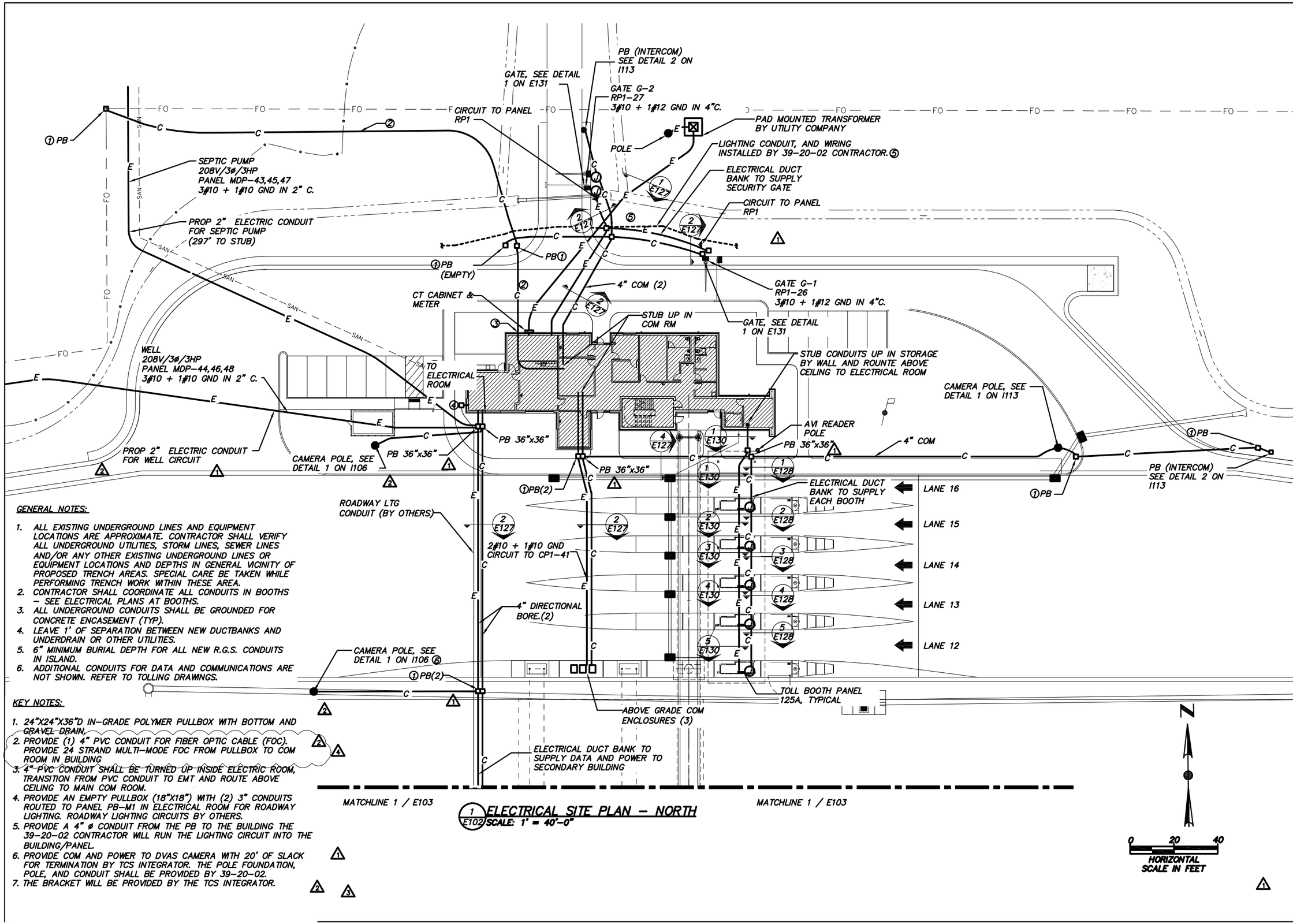

1 E102 ELECTRICAL SITE PLAN – NORTH
SCALE: 1' = 40'-0"

GENERAL NOTES:

1. ALL EXISTING UNDERGROUND LINES AND EQUIPMENT LOCATIONS ARE APPROXIMATE. CONTRACTOR SHALL VERIFY ALL UNDERGROUND UTILITIES, STORM LINES, SEWER LINES AND/OR ANY OTHER EXISTING UNDERGROUND LINES OR EQUIPMENT LOCATIONS AND DEPTHS IN GENERAL VICINITY OF PROPOSED TRENCH AREAS. SPECIAL CARE BE TAKEN WHILE PERFORMING TRENCH WORK WITHIN THESE AREA.
2. CONTRACTOR SHALL COORDINATE ALL CONDUITS IN BOOTHS – SEE ELECTRICAL PLANS AT BOOTHS.
3. ALL UNDERGROUND CONDUITS SHALL BE GROUNDED FOR CONCRETE ENCASEMENT (TYP).
4. LEAVE 1' OF SEPARATION BETWEEN NEW DUCTBANKS AND UNDERDRAIN OR OTHER UTILITIES.
5. 6" MINIMUM BURIAL DEPTH FOR ALL NEW R.G.S. CONDUITS IN ISLAND.
6. ADDITIONAL CONDUITS FOR DATA AND COMMUNICATIONS ARE NOT SHOWN. REFER TO TOLLING DRAWINGS.

KEY NOTES:

1. 24"X24"X36"D IN-GRADE POLYMER PULLBOX WITH BOTTOM AND GRAVEL DRAIN.
2. PROVIDE (1) 4" PVC CONDUIT FOR FIBER OPTIC CABLE (FOC). PROVIDE 24 STRAND MULTI-MODE FOC FROM PULLBOX TO COM ROOM IN BUILDING
3. 4" PVC CONDUIT SHALL BE TURNED UP INSIDE ELECTRIC ROOM, TRANSITION FROM PVC CONDUIT TO EMT AND ROUTE ABOVE CEILING TO MAIN COM ROOM.
4. PROVIDE AN EMPTY PULLBOX (18"X18") WITH (2) 3" CONDUITS ROUTED TO PANEL PB-M1 IN ELECTRICAL ROOM FOR ROADWAY LIGHTING. ROADWAY LIGHTING CIRCUITS BY OTHERS.
5. PROVIDE A 4" ø CONDUIT FROM THE PB TO THE BUILDING THE 39-20-02 CONTRACTOR WILL RUN THE LIGHTING CIRCUIT INTO THE BUILDING/PANEL.
6. PROVIDE COM AND POWER TO DVAS CAMERA WITH 20' OF SLACK FOR TERMINATION BY TCS INTEGRATOR. THE POLE FOUNDATION, POLE, AND CONDUIT SHALL BE PROVIDED BY 39-20-02.
7. THE BRACKET WILL BE PROVIDED BY THE TCS INTEGRATOR.

DESIGN AGENCY
PRIME EV
540 White Pond Drive, Ste. E
Akron, Ohio 44320
(330)-864-7755

NO.	REVISIONS	BY	DATE
2	ADDENDUM No. 3	CK	5/15/20
3	ADDENDUM No. 4	CK	5/18/20
4	ADDENDUM No. 5	CK	5/21/20

DESIGNED RNS
CHECKED CEK
DRAWN RNS
IN CHARGE CEK

ELECTRICAL SITE PLAN – NORTH
LUCAS COUNTY
TOLL PLAZA 49

PROJECT 58-20-01
DATE: 04/22/2020

E102

152
202

OHIO TURNPIKE AND INFRASTRUCTURE COMMISSION

GENERAL NOTES

1. SEE ELECTRICAL, STRUCTURAL, MECHANICAL, CIVIL, AND ARCHITECTURAL DRAWINGS FOR ADDITIONAL INFORMATION.
2. THE CONTACT DRAWINGS INDICATE THE GENERAL ARRANGEMENT FOR THE COMMUNICATIONS AND SECURITY SYSTEMS.
3. DRAWINGS ARE DIAGRAMMATIC AND DO NOT INDICATE NECESSARY OFFSETS, OBSTRUCTIONS, OR STRUCTURAL CONDITIONS.
4. ALL WORKING SHALL CONFORM TO REQUIREMENTS OF THE SPECIFICATIONS, CONTRACT DRAWINGS, LATEST EDITION OF THE NFPA, THE NATIONAL ELECTRICAL SAFETY CODE (NESC) AND THE REGULATIONS OF OTHER AUTHORITIES HAVING JURISDICTION.
5. CONDUITS, JUNCTION BOXES AND OTHER EQUIPMENT INSTALLED SHALL NOT INTERFERE WITH THE OPERATION OF WINDOWS, DOOR, ETC.
6. CAREFULLY CHECK SPACE REQUIREMENTS, INCLUDING SERVICING SPACE REQUIREMENTS, TO ENSURE THAT ALL EQUIPMENT AND MATERIALS CAN BE INSTALLED IN SPACES ALLOTTED THERETO, AND MEETS N.E.C. REQUIREMENTS FOR WORKING CLEARANCE.
7. COMMUNICATION AND SECURITY CABLES SHALL BE INSTALLED IN CONFORMANCE WITH SPECIFICATIONS.
8. GROUNDED SYSTEM FOR COMMUNICATION AND SECURITY ENCLOSURES , CABINETS, EQUIPMENT, JUNCTION BOXES AND ANY OTHER EQUIPMENT OR APPARATUS SHALL COMPLY WITH THE REQUIREMENTS OF THE SPECIFICATIONS.
9. PROVIDED ALL CORE DRILLS NECESSARY FOR COMMUNICATION AND POWER CONDUIT ROUTING, PROPERLY SEAL ALL PENETRATIONS. INSTALL FIRE STOPPING FOR CORE DRILLS WHERE REQUIRED BY CODE.
10. CABLES CONNECTING IP DEVICES TO THE SWITCHES ARE NOT TO EXCEED 328 FEET IN LENGTH, INCLUDING ALL PATCH/JUMPER CABLES.
11. INSTALL ETHERNET SURGE SUPPRESSOR ON CAT6 CABLE AT EACH END FOR EACH EXTERIOR DEVICE, GROUND ALL SURGE SUPPRESSORS.
12. ALL EXTERIOR DEVICES SHALL UTILIZE OUTSIDE PLANT RATED SHIELDED CATEGORY 6A-GEL FILLED CABLE WITH WATER BLOCKING UNLESS OTHERWISE SPECIFIED.
13. PROVIDE A GREEN INSULATED EQUIPMENT GROUNDING CONDUCTOR TO EACH PIECE OF COMMUNICATIONS AND SECURITY EQUIPMENT. PROVIDE A GROUND BAR ON EACH RACK, EACH RACK IS TO BE BE GROUNDED TO EARTH. RACK EQUIPMENT IS TO BE GROUNDED TO RACK. COMBINING GROUNDING CONDUCTORS, OR THE USE OF CONDUIT AS AN EQUIPMENT, COMBINING GROUNDING CONDUCTORS, OR THE USE OF CONDUIT AS AN EQUIPMENT GROUND, SHALL NOT BE PERMITTED.
14. ALL METALLIC CONDUITS AND RACEWAYS SHALL BE ELECTRICALLY CONTINUOUS AND GROUNDED.
15. CONTRACTOR TO PROVIDE ALL WIRING DEVICES REQUIRED BY N.E.C. INCLUDING, BUT NOT LIMITED TO DISCONNECT SWITCHES, ETC.
16. ALL DEVICES SHALL BE NETWORKED AND POE POWERED UNLESS OTHERWISE SPECIFIED. IP CAMERAS SHALL COMPLY TO IEEE 802.3AF. INCLUDE A HARDENED POE POWER BOOSTER TO ACHIEVE REQUIRED POWER , OR POWER THE CAMERA FROM A SEPARATE CAMERA POWER SUPPLY (PROVIDED THERE IS SUFFICIENT SPACE FOR POWER SUPPLY INSTALLATION).
17. 8'H X 4'W X 3/4 T GRADE ACX PAINTED PLYWOOD SHALL BE PLACED ON DESIGNATED WALL OF THE COMMUNICATIONS ROOM. PLYWOOD SHALL BE PAINTED TWO COATS OF FIRE RETARDANT WHITE PAINT.
18. INSTALL CABLE TRAY WITH MINIMAL 12" CLEARANCE ABOVE AND ON ONE SIDE OF TRAY. TRAY SHALL HAVE A MINIMAL 3" CLEARANCE BELOW WHEN PLACED ABOVE LIGHTING FIXTURES OR ABOVE ACCESSIBLE CEILING SPACE.
19. BACK BOXES INSTALLED FOR COMMUNICATIONS DATA AND VOICE WIRING TERMINATION SHALL BE SINGLE GANG OUTLET BOXES TO ALLOW FOR THE REQUIRED WORKING CLEARANCE OF THE CAT6 CABLE. THESE BOXES SHALL BE SEPARATE FROM ELECTRICAL JUNCTION BOXES AND BE EXCLUSIVELY FOR DATA AND VOICE COMMUNICATIONS.
20. THE NUMBER OF HORIZONTAL CABLES PLACED IN A CABLE SUPPORT OR PATHWAY SHALL BE LIMITED TO A NUMBER OF CABLES THAT WILL NOT CAUSE THE GEOMETRIC SHAPE OF THE CABLES TO BE ALTERED UNDER NO CIRCUMSTANCES SHALL CABLES IN THE HORIZONTAL PATHWAY BE BUNDLED. THIS IS TO MINIMIZE "ALIEN" CROSS-TALK.
21. CONDUITS SHALL HAVE CONNECTORS, PROTECTIVE BUSHINGS, PULL STRINGS, AND SHALL BE GROUNDED.
22. ELECTRICAL CONTRACTOR SHALL ADHERE TO COMMERCIAL BUILDING STANDARD FOR TELECOMMUNICATIONS PATHWAYS SET FOURTH IN ANSI-TIA-569-C STANDARD.
23. ALL COM SHALL BE PROVIDED, INSTALLED AND TESTED IN THIS CONTRACT UNLESS OTHERWISE NOTED.
24. ALL WIRE SHALL BE PROVIDED AND INSTALLED BY THE 58-20-01 CONTRACTOR AND THE TCS INTEGRATOR WILL TERMINATE AND TEST ALL COM. CABLING FOR THE TOLL COLLECTION SYSTEM. ANY COM. CABLING THAT IS DAMAGED OR WILL NOT TEST CORRECTLY SHALL BE RE-INSTALLED BY THIS CONTRACT AT NO ADDITIONAL COST TO THE COMMISSION.

2

3

ITS ABBREVIATIONS

AFC	ABOVE FINISHED CEILING	ITC	VOIP INTERCOM
AFF	ABOVE FINISHED FLOOR	NEC	NATIONAL ELECTRIC CODE
AFG	ABOVE FINISHED GRADE	PBX	PRIVATE BRANCH EXCHANGE
CAT6	CATEGORY 6 CABLE	POE	POWER OVER ETHERNET
CCTV	CLOSED CIRCUIT TELEVISION	PSIM	PHYSICAL SECURITY INFORMATION MANAGEMENT
CKT	CIRCUIT	SFP	SMALL FORM-FACTOR PLUGGABLE
CL	CENTERLINE	VOIP	VOICE OVER INTERNET PROTOCOL
DWG	DRAWING		
EACS	ELECTRONIC ACCESS CONTROL SYSTEM		

ITS LEGEND

SYMBOL	DESCRIPTION	MOUNTING HEIGHT
	TELECOMMUNICATIONS QUAD JACK FACEPLATE OUTLET	18"
	VOIP INTERCOM	4'-0" TO CL
	WALL MOUNTED TELEPHONE OUTLET	48" 1
D	DOME FIXED IP CAMERA ## - CAMERA NUMBER	7'-6" TO TOP
	FIXED IP CAMERA ## - CAMERA NUMBER	SEE DETAIL ON I111
P	PAN/TILT/ZOOM IP CAMERA ## - CAMERA NUMBER	60' TO TOP
	180 DEGREE VIEW IP CAMERA ## - CAMERA NUMBER	7'-6" TO TOP
	PANELBOARD-SURAFCE MOUNTED	
	TELEPHONE EQUIPMENT BACKBOARD	2'-0" TO CL
	CONDUIT IN OR ABOVE CEILING OR WALL (NO. OF TICKS INDICATE NO. OF CONDUCT 2#12+1#12 GRD.-3/4" CONDUIT UNLESS OTHERWISE NOTED	
	HOMERUN TO PANEL, ARROW INDICATES NO. OF CIRCUITS (NO. OF TICKS INDICATE NO. OF CONDUCT 2#12+1#12 GRD.-3/4" CONDUIT UNLESS OTHERWISE NOTED	
	FLEXIBLE METAL CONDUIT CONCEALED IN CEILING OR WALL	
	CONDUIT IN OR BELOW FLOOR	
—T—	UNDERGROUND TELEPHONE CONDUIT/DUCTBANK	
J	JUNCTION BOX	
2	SEE DRAWING NOTE OF SAME NUMBER	
SP1 00	SECURE DIRECTION OF TRAVEL DOOR STYLE DOOR NUMBER	

5/20/2020 2:55:25 PM

Project Name

DESIGN AGENCY
PRIME AE
540 White Pond Drive, Ste. E
Akron, Ohio 44320
(330)-864-7755

NO.	REVISIONS	BY	DATE
1	ADDENDUM No.2	CK	5/12/20
2	ADDENDUM No.3	CK	5/15/20
3	ADDENDUM No.5	CK	5/21/20

DESIGNED RNS
DRAWN RNS
CHECKED CEK
IN CHARGE CEK

ITS LEGEND. ABBREVIATIONS AND NOTES.

TOLL PLAZA 49

LUCAS COUNTY

PROJECT 58-20-01
DATE: 05/15/2020

I101

OHIO TURNPIKE AND INFRASTRUCTURE COMMISSION

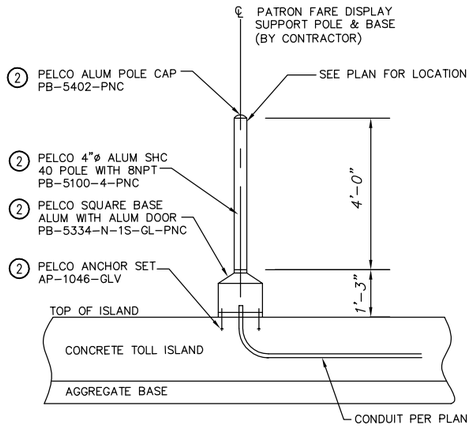

PATRON FARE DISPLAY SUPPORT
DETAIL 9

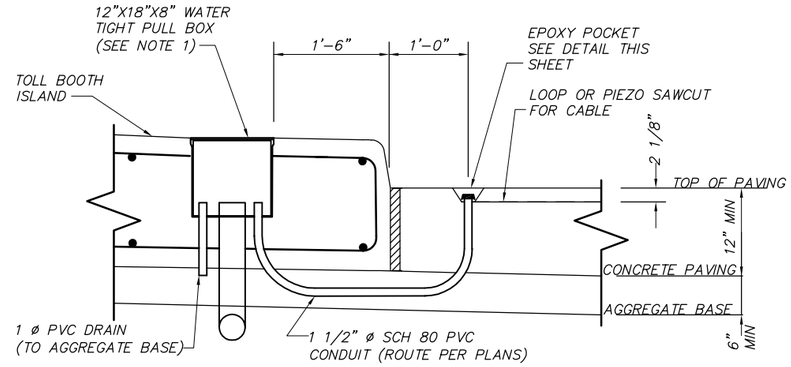

EXIT LANE ISLAND PULL BOX
DETAIL 10

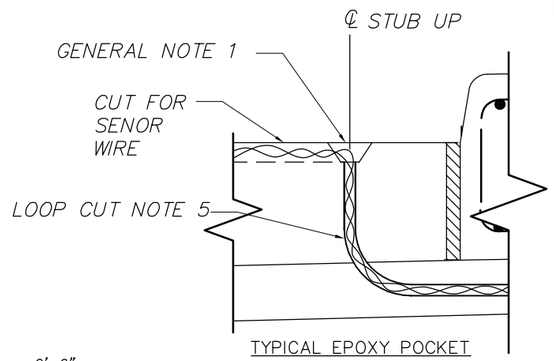

TYPICAL EPOXY POCKET
DETAIL 11

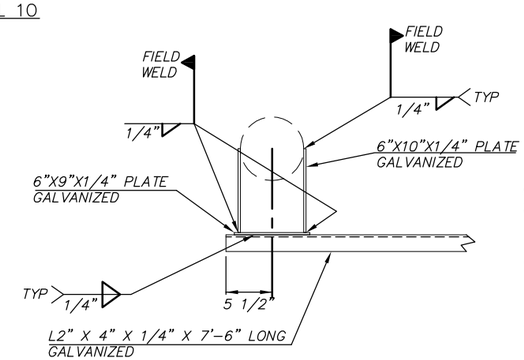

1 VIEW
I126

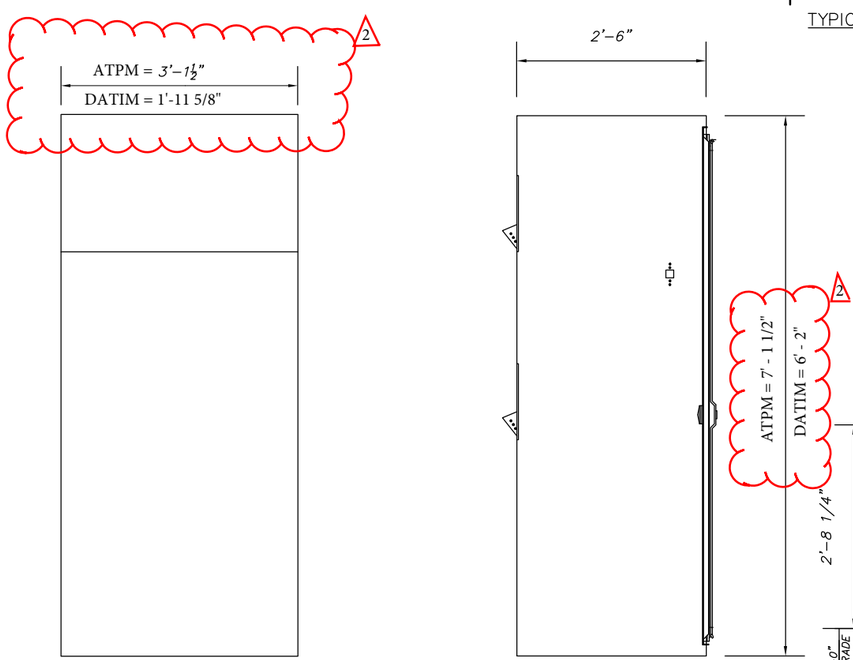

ATPM & DATIM ENCLOSURE DETAIL
DETAIL 12 (3)

1
I126

* – CONTRACTOR MAY ADJUST AS REQUIRED

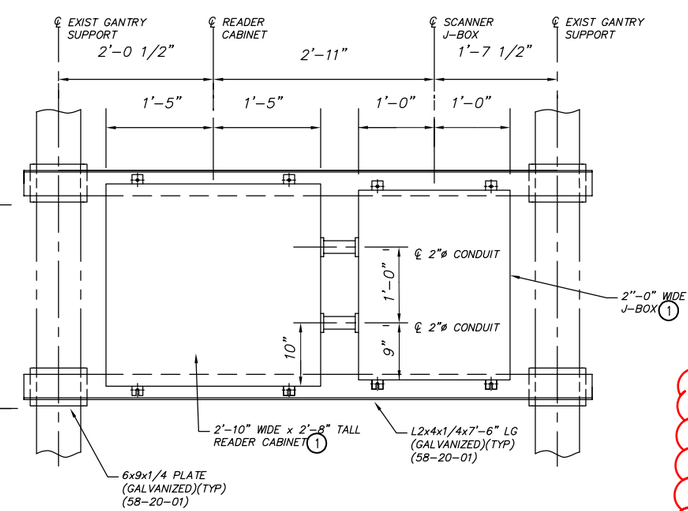

TYPICAL CABINET MOUNT
DETAIL 11

GENERAL NOTE:

1. THE 39-20-02 CONTRACTOR IS RESPONSIBLE FOR ALL SAW CUTTING, EPOXY POCKET AND CONDUIT IN THE ORT LANES.
2. THE 58-20-01 CONTRACTOR IS RESPONSIBLE FOR ALL SAW CUTTING, EPOXY POCKET AND CONDUIT IN THE TOLL PLAZA LANES.
3. THE 58-20-01 CONTRACTOR SHALL CUT LOOPS AND CREATE EPOXY POCKET BY CHIPPING OUT POCKET TO REMOVE STUB UP RUBBER PLUG. INTEGRATOR SHALL INSTALL SENSOR WIRE BEFORE PLUGGING CONDUIT AND SEALING CUT AND POCKET WITH EPOXY.

PULL BOX NOTES:

1. PULL BOX SHALL HAVE HEAVY DUTY CHECKERED SIDEWALK COVER, GASKETED WITH STAINLESS STEEL HARDWARE, CROUSE HINDS WJBF OR APPROVED EQUAL.
2. SEE PLANS FOR PLACEMENT OF PULL BOX AND ROUTING OF CONDUIT.

LOOP CUT NOTES:

1. MINIMUM SAW DEPTH IS 2", MAX SAW DEPTH IS 2 1/2".
2. LOOP DETECTOR WIRE IN TUBING SHALL BE SPECIFIED IN INTEGRATOR CABLE SCHEDULE.
3. LOOP DETECTOR SEALANT SHALL BE A PREQUALIFIED PRODUCT IN ACCORDANCE WITH SUPPLEMENT 1048. (INTEGRATOR)
4. LENGTH AND WIDTH OF LOOP CUTS SHALL BE AS SPECIFIED IN PLANS.
5. THE INTEGRATOR IS RESPONSIBLE FOR INSTALLING LOOP WIRE, PIEZO WIRE AND EPOXYING THE SAW CUTS.

KEY NOTES:

(1) THE ENCLOSURES SHALL BE PROVIDED BY THE INTEGRATOR AND SHALL BE INSTALLED BY THE 58-20-01 CONTRACTOR.

(2) THE POLE AND ANCHORE BOLTS SHALL BE PROVIDED BY THE INTEGRATOR AND SHALL BE INSTALLED BY THE 58-20-01 CONTRACTOR.

(3) THE ATPM'S AND THE DATIM'S SHALL BY PROVIDED AND INSTALLED BY THE INTEGRATOR.

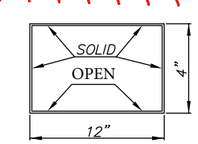

CABLE TRAY

THE CABLE TRAY TO BE MOUNTED ON GANTRY SHALL BE ALUMINUM WITH A TROUGH STYLE BOTTOM AND AN INWARD FLANGE AT THE TOP. THE SIDES AND TOP SHALL BE A SOLID COVERING. ATTACHMENT TO THE 2.5" DIA. HORIZONTAL DIAGONALS SHALL BE AS SPECIFIED BY THE MANUFACTURER. LASHING OF CABLES TO THE TRAY SHALL BE AS SPECIFIED BY THE MANUFACTURER. THE CABLE TRAY SHALL BE MANUFACTURED BY CHALFANT MANUFACTURING CO., 50 PEARL ROAD, SUITE 212, BRUNSWICK, OHIO 44212 TEL: 330-273-3510 OR AN APPROVED EQUAL.

1 ENTIRE SHEET

DESIGN AGENCY
PRIME EA
540 White Pond Drive, Ste. E
Akron, Ohio 44320
(330)-864-7755

NO.	REVISIONS	BY	DATE
1	ADDENDUM No. 2	CK	5/12/20
2	ADDENDUM No. 5	CK	5/21/20

DESIGNED	CHECKED	IN CHARGE
RNS	CEK	CEK
DRAWN RNS		

LUCAS COUNTY

TYPICAL DETAILS

TOLL PLAZA 49

PROJECT 58-20-01

DATE: 04/22/2020

I126

202E / 202

OHIO TURNPIKE AND INFRASTRUCTURE COMMISSION