4/3/2019 10:19:50 AM

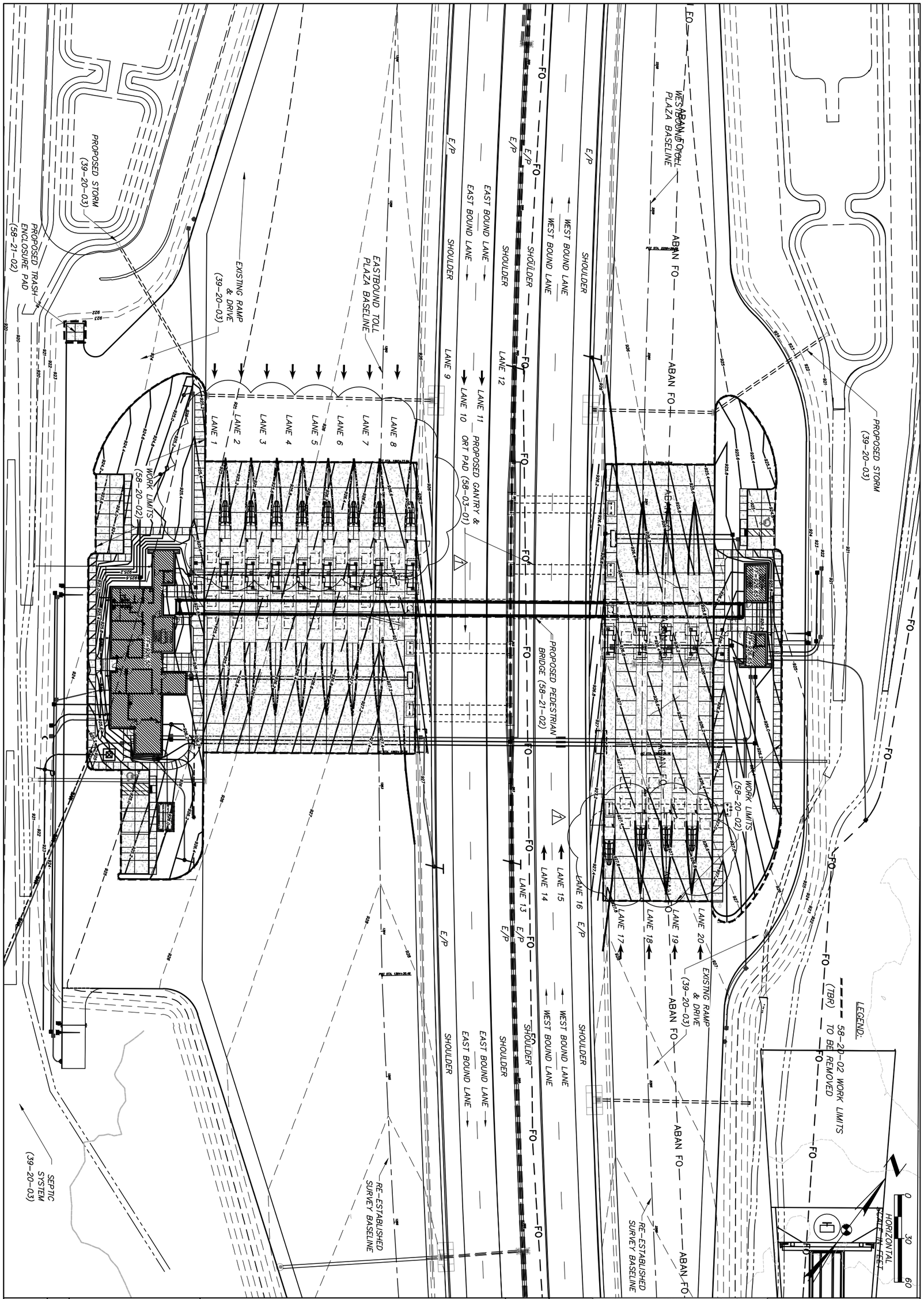

15 / 236	C103	PROJECT 58-21-01	SITE PLAN – EXISTING CONDITIONS	DESIGNED LHBJ	CHECKED SMM	NO.	REVISIONS	BY	DATE
		DATE: 04/17/2020		DRAWN LHBJ	IN CHARGE SMM	1	Addendum No. 1	LHB	7-21-21
			TP49 LUCUS COUNTY						

DESIGN AGENCY
PRIME AE
540 White Pond Drive, Ste. E
Akron, Ohio 44320
(330)-864-7755

OHIO TURNPIKE

OHIO TURNPIKE AND INFRASTRUCTURE COMMISSION

OHIO TURNPIKE

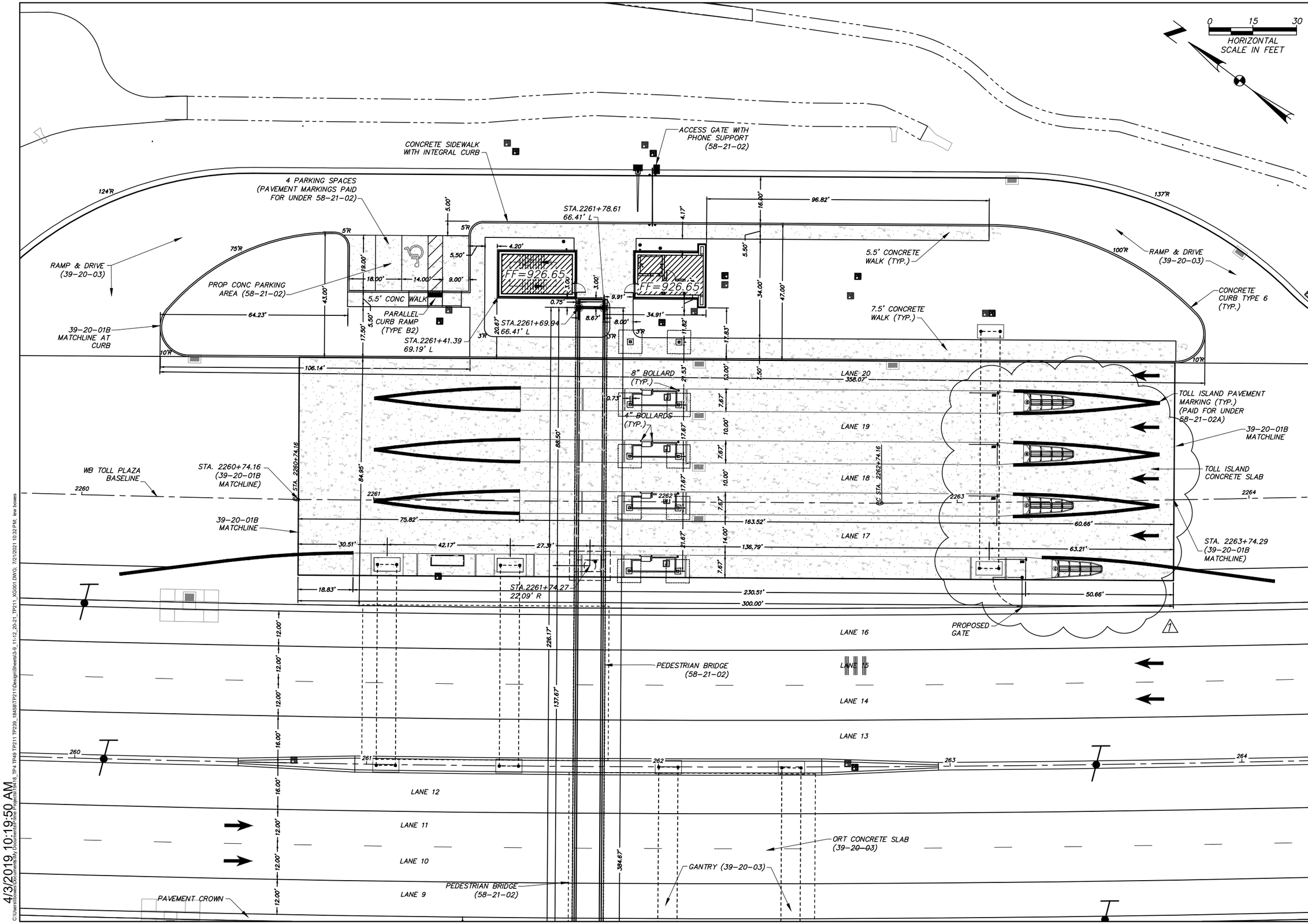

4/3/2019 10:19:50 AM

C:\Users\lhbeej\Documents\My Documents\Projects\1848_TP4 TP49 TP211 TP239_1845&TP211\Design\Sheets\3-9_11+12_20-21_TP211_XG0011.DWG, 7/21/2021 10:32 PM, lee bowes

DESIGN AGENCY

PRIME AE

540 White Pond Drive, Ste E
Akron, Ohio 44320
(330)-864-7755

NO.	REVISIONS	BY	DATE
1	Addendum No. 1	LHB	7-21-21

DESIGNED	CHECKED
LHBJ	SMM
DRAWN	IN CHARGE
LHBJ	SMM

SITE DIMENSION PLAN – NORTH SITE

LUCUS COUNTY

TP49

PROJECT 58-21-01

DATE: 04/17/2020

C104

OHIO TURNPIKE AND INFRASTRUCTURE COMMISSION

4/3/2019 10:19:50 AM

C:\Users\bowes\Documents\My Documents\Prime Projects\19418_TP4 TP49 TP211 TP239_18458\TP211\Design\Sheets\3-9_11-12_20-21_TP211_XG001.DWG; 7/21/2021 10:34 PM; lew bowes

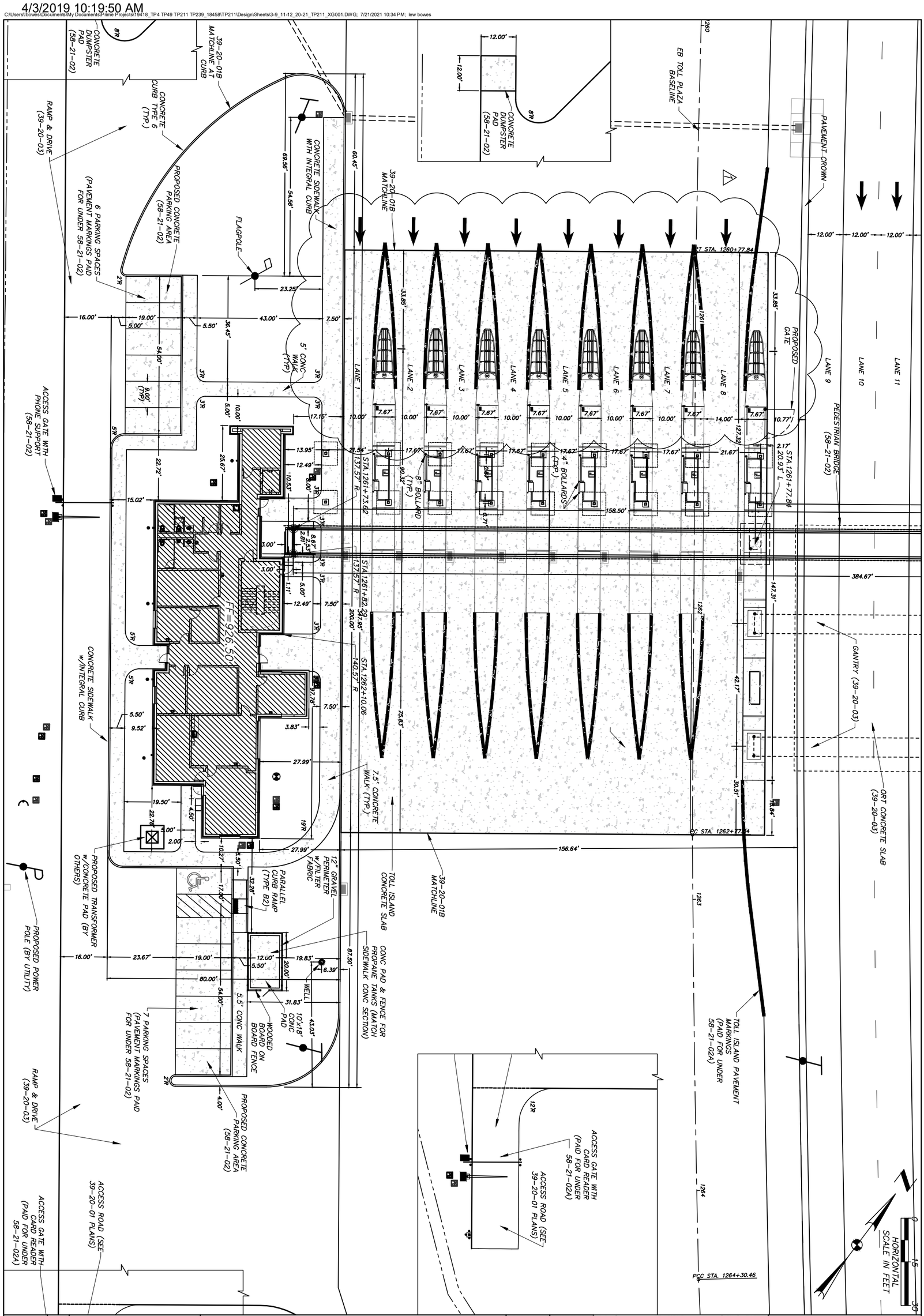

17 / 236	C105	PROJECT 58-21-01	SITE DIMENSION PLAN – SOUTH SITE	DESIGNED LHBJ	CHECKED SMM	NO.	REVISIONS	BY	DATE
		DATE: 04/17/2020	TP49 LUCUS COUNTY	DRAWN LHBJ	IN CHARGE SMM	1	Addendum No. 1	LHB	7-21-21

DESIGN AGENCY
PRIME AE
540 White Pond Drive, Ste. E
Akron, Ohio 44320
(330)-864-7755

OHIO TURNPIKE

OHIO TURNPIKE AND INFRASTRUCTURE COMMISSION

OHIO TURNPIKE

NOTES:

1. THE BORING PIT SHALL BE COORDINATED WITH THE MOT PORTABLE CONCRETE BARRIER WALL AND LIVE TRAFFIC. BORING PITS ARE OPTIONAL.

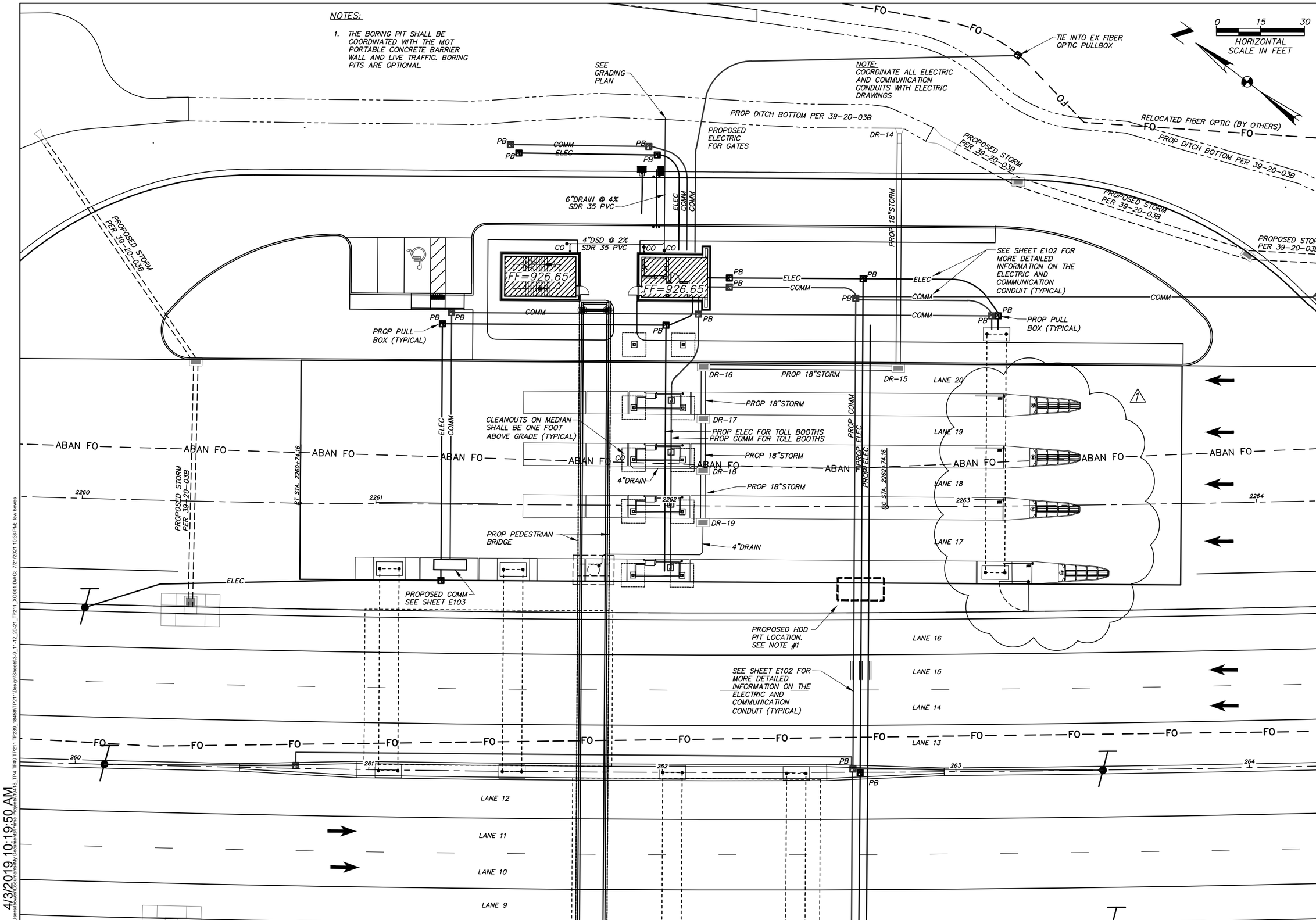

DESIGN AGENCY
PRIME AE
540 White Pond Drive, Ste. E
Akron, Ohio 44320
(330)-864-7755

NO.	REVISIONS	BY	DATE
1	Addendum No. 1	LHB	7-21-21

DESIGNED	CHECKED
LHBJ	SMM
DRAWN	IN CHARGE
LHBJ	SMM

SITE UTILITY PLAN – NORTH SITE

LUCUS COUNTY

TP49

PROJECT 58-21-01

DATE: 04/17/2020

C106

18
236

OHIO TURNPIKE AND INFRASTRUCTURE COMMISSION

4/3/2019 10:19:50 AM

C:\Users\lewbowers\AppData\Local\Temp\AcPublish_18468\TP4 TP49 TP211 TP239_18458\TP211\Design\Sheets\3-9_11-12_20-21_TP211_XG001.DWG; 7/21/2021 10:36 PM; lew bowers

NOTES:

1. THE BORING PIT SHALL BE COORDINATED WITH THE MOT PORTABLE CONCRETE BARRIER WALL AND LIVE TRAFFIC.

NOTE:
COORDINATE ALL ELECTRIC AND COMMUNICATION CONDUITS WITH ELECTRIC DRAWINGS

DESIGN AGENCY
PRIME AE
540 White Pond Drive, Ste. E
Akron, Ohio 44320
(330)-864-7755

NO.	REVISIONS	BY	DATE
1	Addendum No. 1	LHB	7-21-21

DESIGNED	CHECKED
LHBJ	SMM
DRAWN	IN CHARGE
LHBJ	SMM

SITE UTILITY PLAN – SOUTH SITE

LUCUS COUNTY

TP49

PROJECT 58-21-01

DATE: 04/17/2020

C107

19
236

OHIO TURNPIKE AND INFRASTRUCTURE COMMISSION

4/3/2019 10:19:50 AM
C:\Users\bjoyce\Documents\My Documents\Projects\1418_TP4 TP49 TP211 TP239_18458\TP211\Design\Sheets\3-9_11-12_20-21_TP211_XG001.DWG, 7/21/2021 10:39 PM, lew bowes

DESIGN AGENCY
PRIME AE
540 White Pond Drive, Ste E
Akron, Ohio 44320
(330)-864-7755

NO.	REVISIONS	BY	DATE
1	Addendum No. 1	LHB	7-21-21

DESIGNED	CHECKED	DRAWN	IN CHARGE
LHBJ	SMM	LHBJ	SMM

SITE GRADING PLAN – NORTH SITE

LUCUS COUNTY

TP49

PROJECT 58-21-01

DATE: 04/17/2020

C108

20
236

OHIO TURNPIKE AND INFRASTRUCTURE COMMISSION

4/3/2019 10:19:50 AM

C:\Users\lewbowers\Documents\My Documents\Prime Projects\18456_TP4 TP49 TP211 TP239_18456\TP211\Design\Sheets\3-9_11-12_20-21_TP211_XG001.DWG; 7/21/2021 10:41 PM; lew bowers

4/3/2019 10:19:50 AM

C:\Users\bowes\Documents\My Documents\Prime Projects\18418_TP4 TP49 TP211 TP239_18458\TP211\Design\Sheets\3-9_11-12_20-21_TP211_XG001.DWG; 7/21/2021 10:44 PM; lew bowes

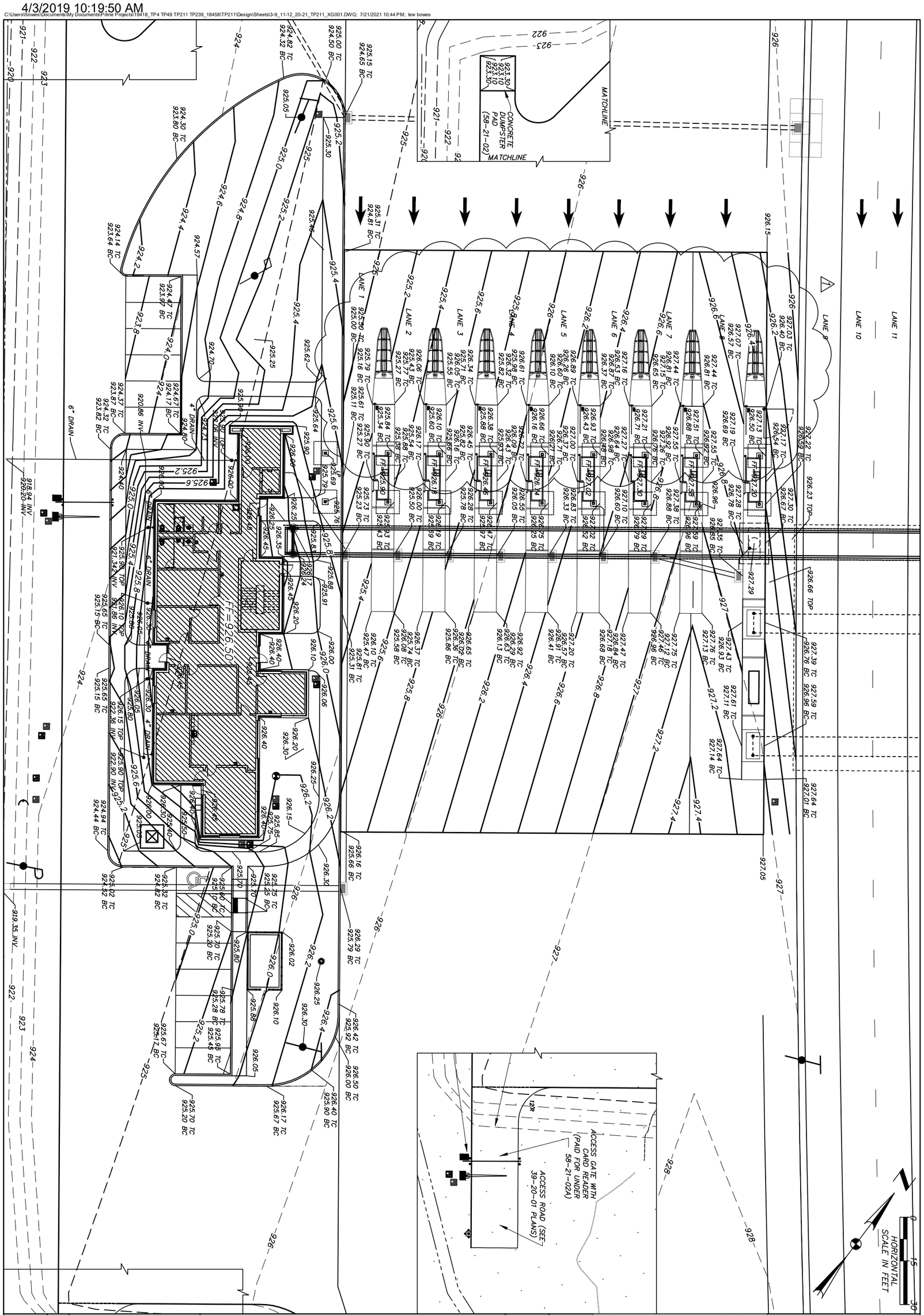

21 / 236	C109	PROJECT 58-21-01	SITE GRADING PLAN – SOUTH SITE	DESIGNED LHBJ	CHECKED SMM	NO.	REVISIONS	BY	DATE	DESIGN AGENCY
		DATE: 04/17/2020	TP49 LUCUS COUNTY	DRAWN LHBJ	IN CHARGE SMM	1	Addendum No. 1	LHB	7-21-21	PRIME AE 540 White Pond Drive, Ste. E Akron, Ohio 44320 (330)-864-7755

OHIO TURNPIKE

OHIO TURNPIKE AND INFRASTRUCTURE COMMISSION

OHIO TURNPIKE

TYPE K PAVEMENT JOINT

THIS JOINT SHALL BE CONSTRUCTED IN THE CONCRETE PAVEMENT AT THE LOCATIONS SHOWN ON SHEET C112 AND SHALL PROVIDE FOR SLAB MOVEMENT IN BOTH THE LONGITUDINAL AND TRANSVERSE DIRECTION WITH LOAD TRANSFER BY MECHANICAL MEANS. THIS JOINT SHALL BE "DIAMOND DOWEL" AT 18" CENTERS AS MANUFACTURED BY PNA, INC. (704) 821-7000, OR APPROVED EQUAL. (NOTE: KEYWAYS MAY ONLY BE USED IN PAVEMENT PLACED WITH THE SLIP FORM OPERATION.)

JOINTING LEGEND

C–TRANSVERSE CONTRACTION JOINT w/DOWELS, PER ODOT STD DWG BP–2.2

K–DUEL MOVEMENT JOINT, SEE DESCRIPTION NOTE, THIS SHEET.

L–LONGITUDINAL JOINT w/TIE BARS, PER ODOT STD DWG BP–2.1 (HOOK BOLTS NOT PERMITTED)

EX–1" EXPANSION JOINT WITHOUT DOWELS, PER ODOT STD DWG BP–2.2

0 15 30
HORIZONTAL SCALE IN FEET

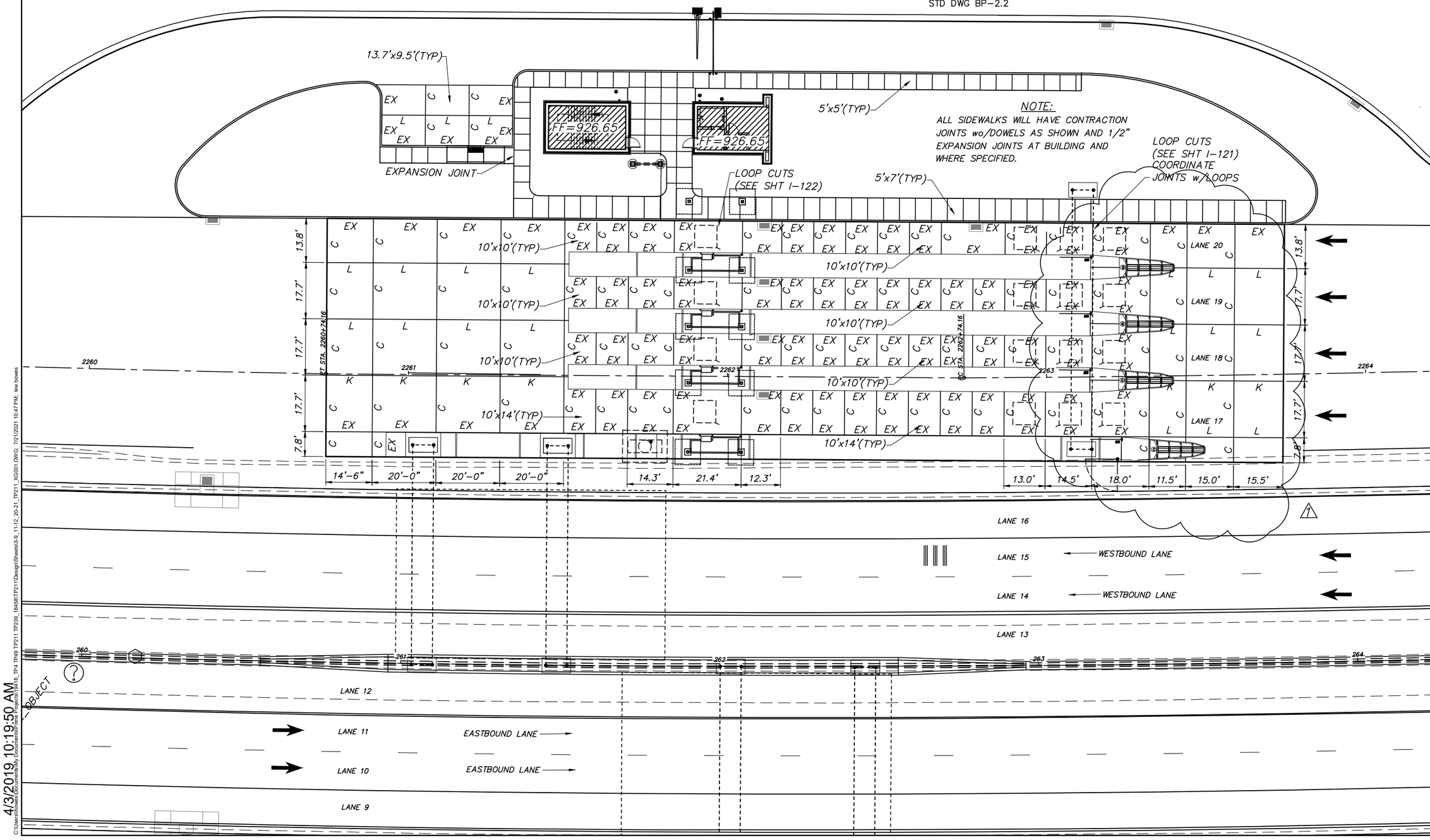

NOTE:
ALL SIDEWALKS WILL HAVE CONTRACTION JOINTS wo/DOWELS AS SHOWN AND 1/2" EXPANSION JOINTS AT BUILDING AND WHERE SPECIFIED.

4/3/2019 10:19:50 AM
C:\Users\lhbj\AppDataLocal\Temp\AcPublish_18456\TP4 TP49 TP211 TP239_18456\TP211\Design\Sheets\3-9_11-12_20-21_TP211_XG001.DWG: 7/21/2021 10:47 PM; lew bowes

DESIGN AGENCY
PRIME AE
540 White Pond Drive, Ste E
Akron, Ohio 44320
(330)-864-7755

NO.	REVISIONS	BY	DATE
1	Addendum No. 1	LHB	7–21–21

DESIGNED	CHECKED	DRAWN	IN CHARGE
LHBJ	SMM	LHBJ	SMM

SITE JOINTING PLAN – NORTH SITE
LUCUS COUNTY
TP49

PROJECT 58-21-01
DATE: 04/17/2020

C111

23
236

OHIO TURNPIKE AND INFRASTRUCTURE COMMISSION

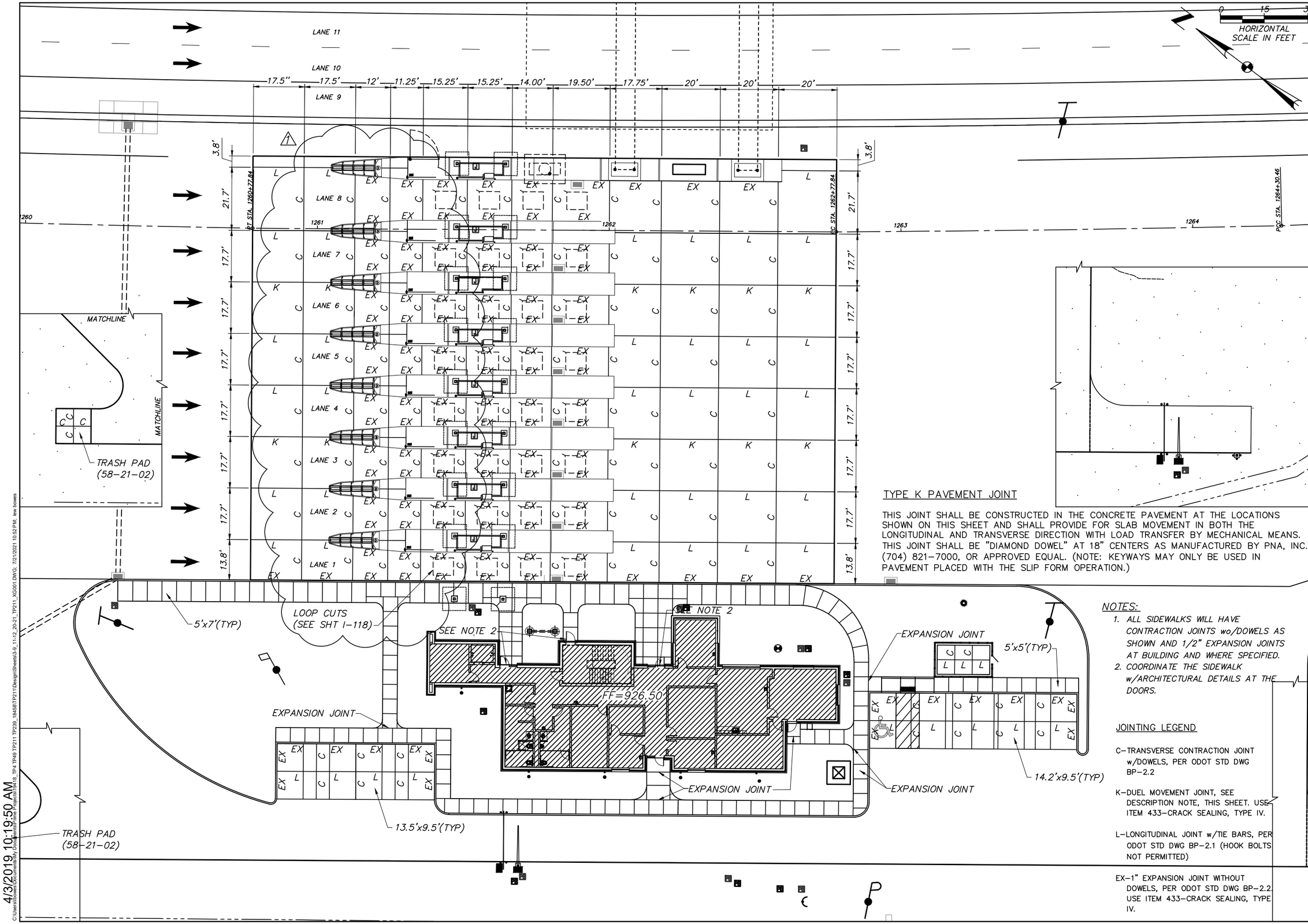

TYPE K PAVEMENT JOINT

THIS JOINT SHALL BE CONSTRUCTED IN THE CONCRETE PAVEMENT AT THE LOCATIONS SHOWN ON THIS SHEET AND SHALL PROVIDE FOR SLAB MOVEMENT IN BOTH THE LONGITUDINAL AND TRANSVERSE DIRECTION WITH LOAD TRANSFER BY MECHANICAL MEANS. THIS JOINT SHALL BE "DIAMOND DOWEL" AT 18" CENTERS AS MANUFACTURED BY PNA, INC. (704) 821-7000, OR APPROVED EQUAL. (NOTE: KEYWAYS MAY ONLY BE USED IN PAVEMENT PLACED WITH THE SLIP FORM OPERATION.)

NOTES:

1. ALL SIDEWALKS WILL HAVE CONTRACTION JOINTS wo/DOWELS AS SHOWN AND 1/2" EXPANSION JOINTS AT BUILDING AND WHERE SPECIFIED.
2. COORDINATE THE SIDEWALK w/ARCHITECTURAL DETAILS AT THE DOORS.

JOINTING LEGEND

C–TRANSVERSE CONTRACTION JOINT w/DOWELS, PER ODOT STD DWG BP–2.2

K–DUEL MOVEMENT JOINT, SEE DESCRIPTION NOTE, THIS SHEET. USE ITEM 433–CRACK SEALING, TYPE IV.

L–LONGITUDINAL JOINT w/TIE BARS, PER ODOT STD DWG BP–2.1 (HOOK BOLTS NOT PERMITTED)

EX–1" EXPANSION JOINT WITHOUT DOWELS, PER ODOT STD DWG BP–2.2. USE ITEM 433–CRACK SEALING, TYPE IV.

DESIGN AGENCY
PRIME AE
540 White Pond Drive, Ste. E
Akron, Ohio 44320
(330)-864-7755

NO.	REVISIONS	BY	DATE
1	Addendum No. 1	LHB	7–21–21

DESIGNED	CHECKED
LHBJ	SMM
DRAWN	IN CHARGE
LHBJ	SMM

SITE JOINTING PLAN – SOUTH SITE
LUCUS COUNTY
TP49

PROJECT 58-21-01
DATE: 04/17/2020

C112

24
236

OHIO TURNPIKE AND INFRASTRUCTURE COMMISSION

4/3/2019 10:19:50 AM
C:\Users\lewis.bowes\Documents\My Docs\Bentley Projects\TP49_TP4 TP49 TP211 TP239_18458\TP211\Design\Sheets\3-9_11-12_20-21_TP211_XG001.DWG, 7/21/2021 10:52 PM, lewis.bowes

TOLL ISLAND DETAILS TO BE COORDINATED WITH TOLL SYSTEM INTEGRATOR IN FUTURE SUBMISSIONS

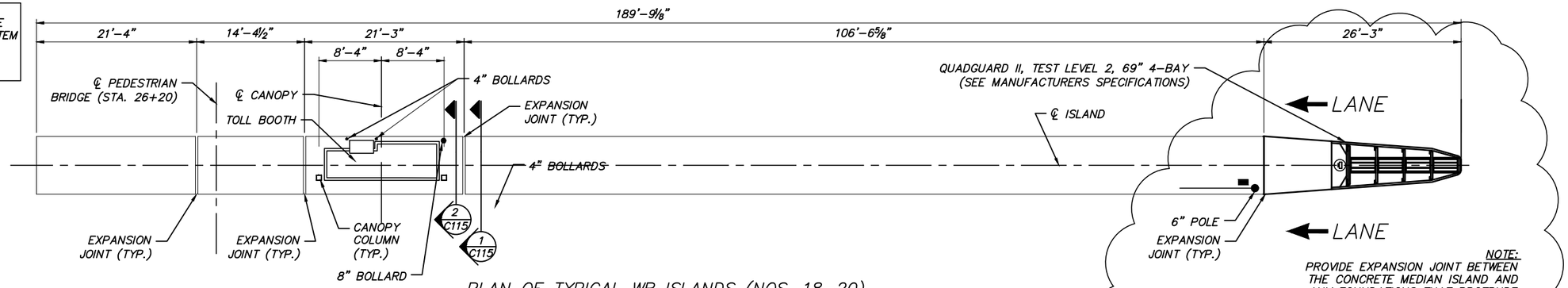

PLAN OF TYPICAL WB ISLANDS (NOS. 18-20)

SCALE: 1/16" = 1'-0"

NOTE:
PROVIDE EXPANSION JOINT BETWEEN THE CONCRETE MEDIAN ISLAND AND ANY FOUNDATIONS THAT PROTRUDE THROUGH.

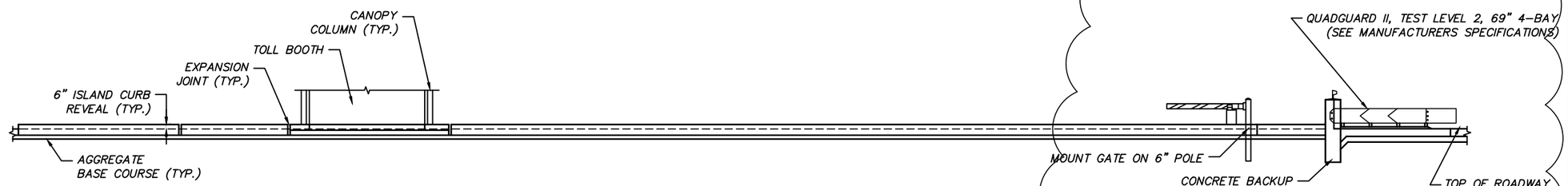

LONGITUDINAL SECTION THROUGH WB ISLANDS (NOS. 18-20)

SCALE: 1/16" = 1'-0"

NOTE:
FOR LOCATION, SEE SHEET C104

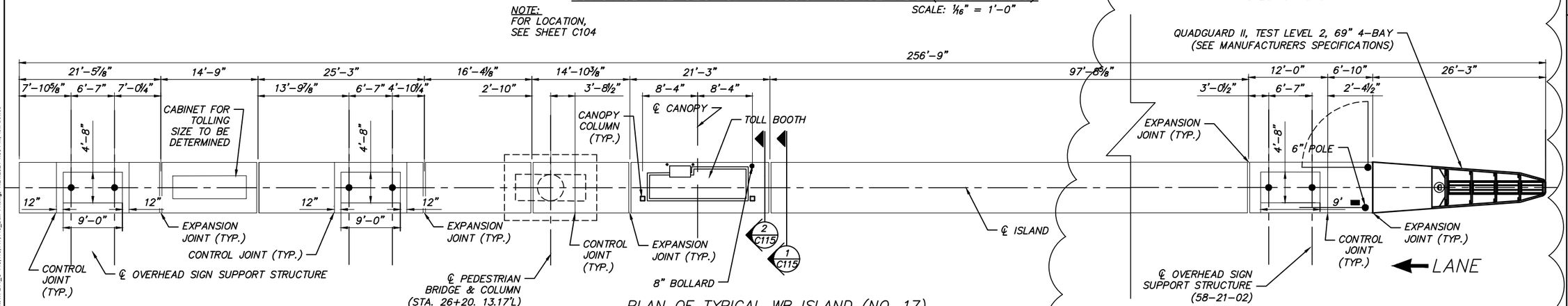

PLAN OF TYPICAL WB ISLAND (NO. 17)

SCALE: 1/16" = 1'-0"

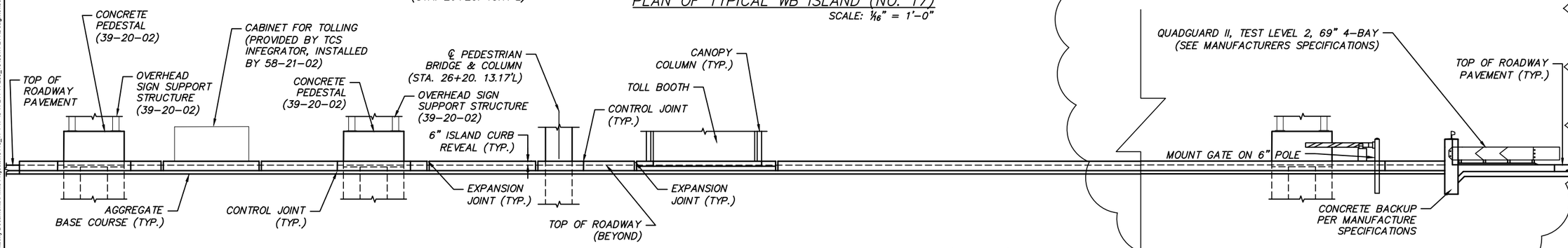

LONGITUDINAL SECTION THROUGH WB ISLAND (NO. 17)

SCALE: 1/16" = 1'-0"

NOTE:
FOR LOCATION, SEE SHEET C104

4/3/2019 10:19:50 AM

C:\Users\bcowan\Documents\My Documents\Ohio Turnpike\1418_TP4 TP40 TP211 TP239_18468\TP211\Design\Sheets\TP211_C-115.116.117.119_Bull-11.dwg; 7/21/2021 1:03 PM; lew boxes

DESIGN AGENCY
PRIME AE
540 White Pond Drive, Ste. E
Akron, Ohio 44320
(330)-864-7755

NO.	REVISIONS	BY	DATE
1	Bulletin No. 11	LHB	7-21-21

DESIGNED	CHECKED	DRAWN	IN CHARGE
LHBJ	SMM	LHBJ	SMM

TOLL ISLANDS DETAILS – NORTH SITE

LUCUS COUNTY

TP49

PROJECT 58-21-01

DATE: 04/17/2020

C115

27 / 236

OHIO TURNPIKE AND INFRASTRUCTURE COMMISSION

TOLL ISLAND DETAILS TO BE COORDINATED WITH TOLL SYSTEM INTEGRATOR IN FUTURE SUBMISSIONS

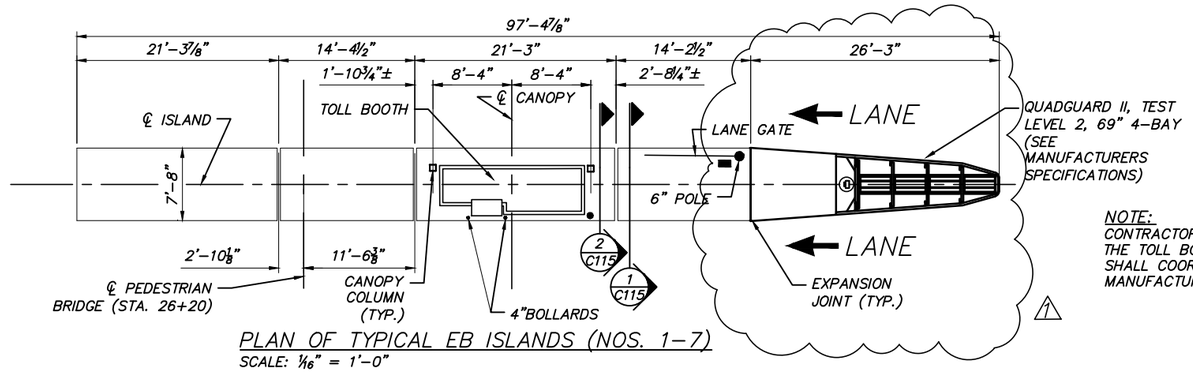

PLAN OF TYPICAL EB ISLANDS (NOS. 1-7)

SCALE: 1/16" = 1'-0"

NOTE:
CONTRACTOR SHALL PROVIDE A LEVEL PAD UNDER THE TOLL BOOTH FOOTPRINT. THE SITE CONTRACTOR SHALL COORDINATE THIS WORK WITH THE TOLL BOOTH MANUFACTURER,

NOTE:
PROVIDE EXPANSION JOINT BETWEEN THE CONCRETE MEDIAN ISLAND AND ANY FOUNDATIONS THAT PROTRUDE THROUGH.

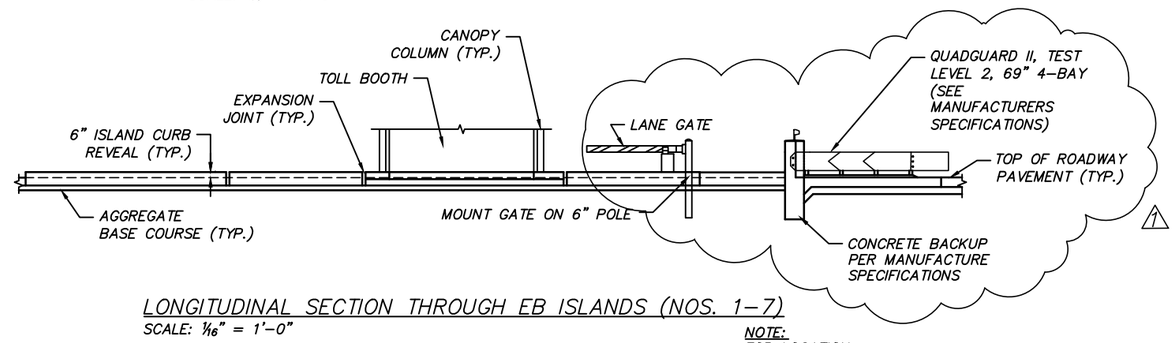

LONGITUDINAL SECTION THROUGH EB ISLANDS (NOS. 1-7)

SCALE: 1/16" = 1'-0"

NOTE:
FOR LOCATION, SEE SHEET C105

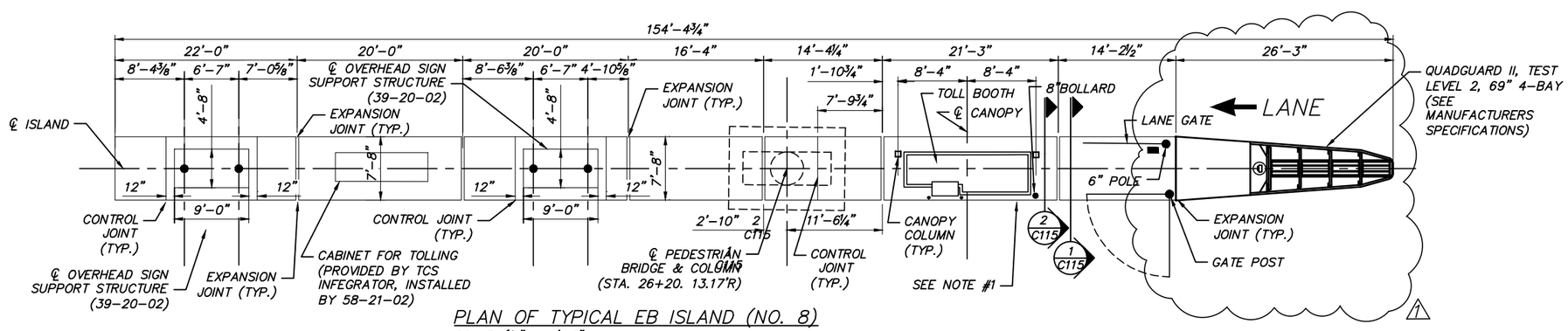

PLAN OF TYPICAL EB ISLAND (NO. 8)

SCALE: 1/16" = 1'-0"

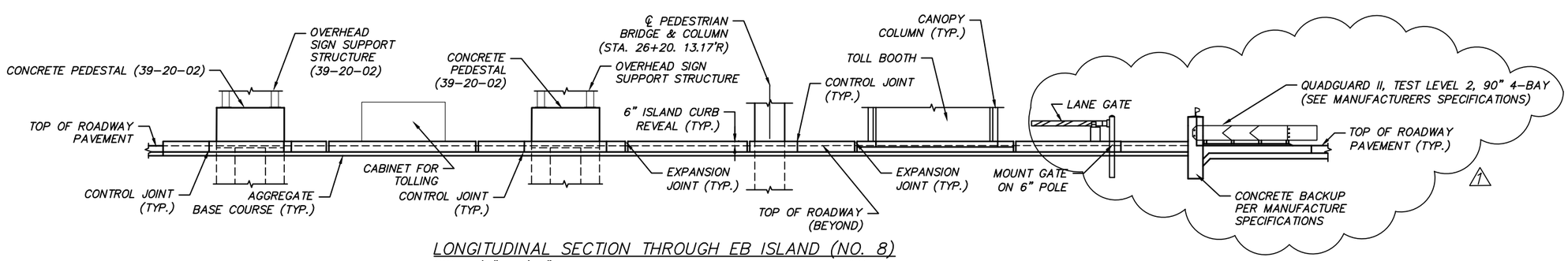

LONGITUDINAL SECTION THROUGH EB ISLAND (NO. 8)

SCALE: 1/16" = 1'-0"

NOTE:
FOR LOCATION, SEE SHEET C105

DESIGN AGENCY
PRIME AE
540 White Pond Drive, Ste. E
Akron, Ohio 44320
(330)-864-7755

NO.	REVISIONS	BY	DATE
1	Bulletin No. 11	LHB	7-21-21

DESIGNED	CHECKED	DRAWN	IN CHARGE
LHBJ	SMM	LHBJ	SMM

TOLL ISLANDS DETAILS – SOUTH SITE

LUCUS COUNTY

TP49

PROJECT 58-21-01

DATE: 04/17/2020

C116

28 / 236

OHIO TURNPIKE AND INFRASTRUCTURE COMMISSION

4/3/2019 10:19:50 AM

C:\Users\lbowers\Documents\My Documents\Prime Projects\1818_TP4 TP49 TP211 TP239_18458\TP211\Design\Sheets\TP211_C-115,116,117,119_Bulit-11.dwg; 7/21/2021 1:03 PM; lew bowers

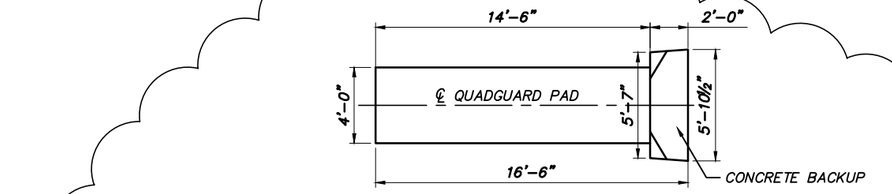

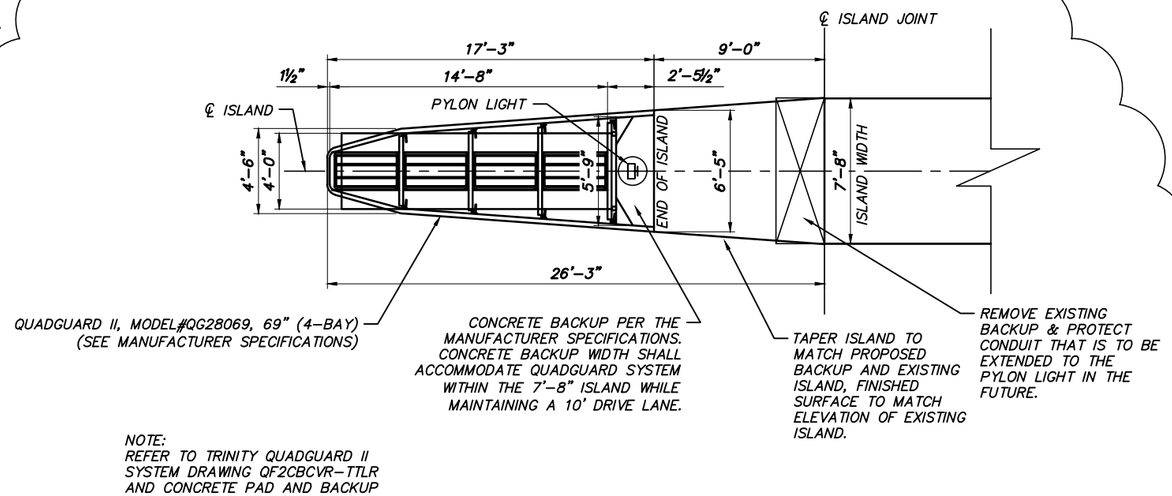

NOTE:
REFER TO TRINITY QUADGUARD II SYSTEM DRAWING QF2CBCVR-TTLR AND CONCRETE PAD AND BACKUP DRAWING 3540411-0000 FOR REFERENCE.

TYPICAL CRASH BARRIER PLAN
SCALE: ⅛" = 1'-0"

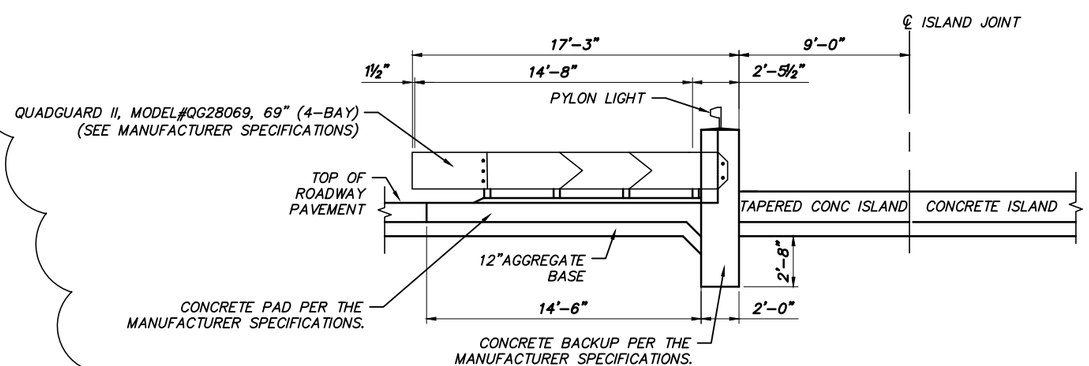

TYPICAL CRASH BARRIER ELEVATION
SCALE: ⅛" = 1'-0"

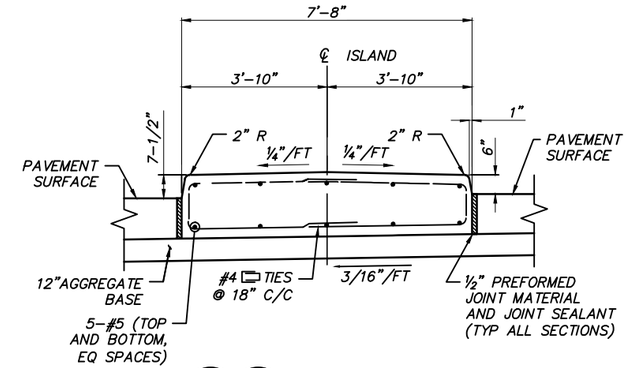

1 C113 / 1 C114 SECTION
SCALE: ¼" = 1'-0"

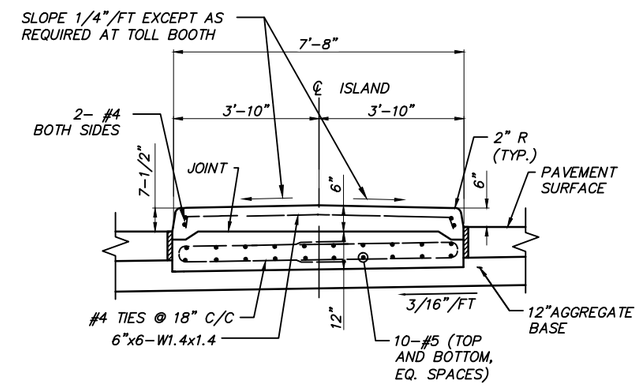

2 C113 / 2 C114 SECTION
SCALE: ¼" = 1'-0"

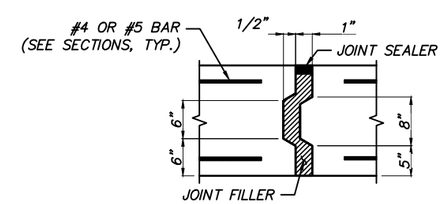

EXPANSION JOINT DETAIL (BETWEEN ISLAND SECTIONS)
NOT TO SCALE

NOTES:

1. CLEARANCE FROM REINFORCING STEEL TO CONCRETE SURFACE IS 2" UNLESS OTHERWISE SHOWN.
2. REINFORCING STEEL IN CAST-IN-PLACE CONCRETE SHALL BE EPOXY COATED.

TOLL ISLAND DETAILS TO BE COORDINATED WITH TOLL SYSTEM INTEGRATOR IN FUTURE SUBMISSIONS

DESIGN AGENCY
PRIME AE
540 White Pond Drive, Ste. E
Akron, Ohio 44320
(330)-864-7755

NO.	REVISIONS	BY	DATE
1	Bulletin No. 10	LHB	7-21-21

DESIGNED	CHECKED	DRAWN	IN CHARGE
LHBJ	SMM	LHBJ	SMM

TOLL ISLANDS DETAILS
LUCUS COUNTY
TP49

PROJECT 58-21-01
DATE: 04/17/2020

C117

29
236

OHIO TURNPIKE AND INFRASTRUCTURE COMMISSION

4/3/2019 10:19:50 AM
C:\Users\bowes\AppData\Local\Temp\AcPublish_18456\TP49 TP211 TP239_18456\TP211\Design\Sheets\TP211_C-115,116,117,119_Bull-11.dwg; 7/21/2021 1:04 PM; lew bowes

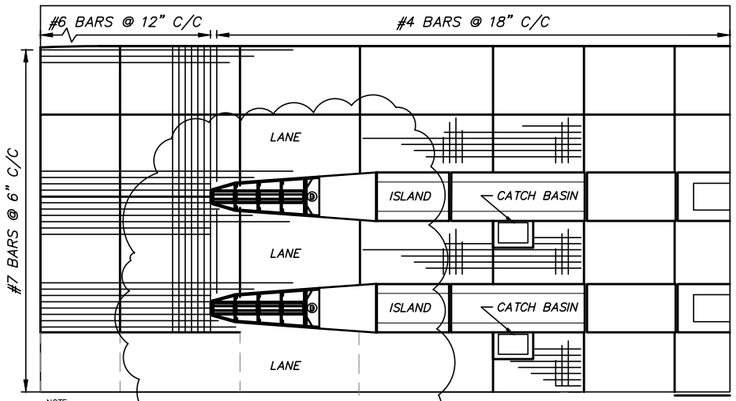

NOTE:
REINFORCEMENT SIMILAR AT ALL ISLANDS.

PAVEMENT REINFORCEMENT PARTIAL PLAN

N.T.S.

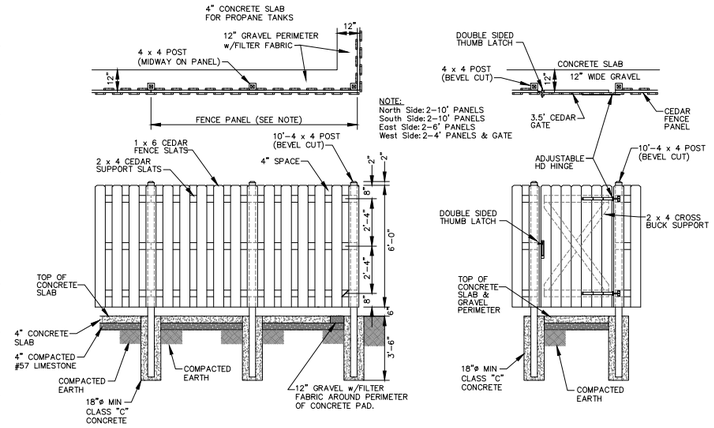

NOTE:
North Side: 2-10' PANELS
South Side: 2-10' PANELS
East Side: 2-6' PANELS
West Side: 2-4' PANELS & GATE

TYPICAL BOARD ON BOARD FENCE DETAIL

N.T.S.

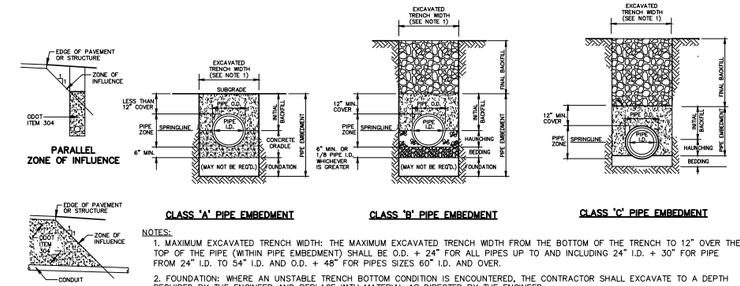

NOTES:

1. MAXIMUM EXCAVATED TRENCH WIDTH: THE MAXIMUM EXCAVATED TRENCH WIDTH FROM THE BOTTOM OF THE TRENCH TO 12" OVER THE TOP OF THE PIPE (WITHIN PIPE EMBEDMENT) SHALL BE O.D. + 24" FOR ALL PIPES UP TO AND INCLUDING 24" I.D. + 30" FOR PIPE FROM 24" I.D. TO 54" I.D. AND O.D. + 48" FOR PIPES SIZES 60" I.D. AND OVER.

2. FOUNDATION: WHERE AN UNSTABLE TRENCH BOTTOM CONDITION IS ENCOUNTERED, THE CONTRACTOR SHALL EXCAVATE TO A DEPTH REQUIRED BY THE ENGINEER AND REPLACE WITH MATERIAL AS DIRECTED BY THE ENGINEER.

3. PIPE EMBEDMENT:

CLASS A: CLASS A PIPE EMBEDMENT SHALL BE USED FOR ALL PIPING UNDER PAVEMENT OR STRUCTURES WITH LESS THAN 12 INCHES OF PIPE COVER TO THE SUBGRADE. THE CONCRETE CRADLE SHALL BE IN ACCORDANCE WITH ODOT ITEM 499, CLASS "QC-1". THE INITIAL BACKFILL SHALL BE AASHTO NO. 57 GRANULAR PIPE EMBEDMENT.

CLASS B: CLASS B PIPE EMBEDMENT SHALL BE USED FOR ALL PIPING UNLESS OTHERWISE NOTED ON THE PLANS OR AUTHORIZED BY THE ENGINEER. THE BEDDING AND HAUNCHING SHALL BE AASHTO NO. 57 GRANULAR PIPE EMBEDMENT. IN ALL AREAS UNDER PAVEMENT, STRUCTURES OR WITHIN THE ZONE OF INFLUENCE, THE INITIAL BACKFILL SHALL BE AASHTO NO. 57 STONE. GRANULAR PIPE EMBEDMENT. IN ALL AREAS OUTSIDE OF PAVEMENT, STRUCTURES OR THE ZONE OF INFLUENCE, THE INITIAL BACKFILL SHALL BE SUITABLE ON-SITE MATERIAL APPROVED BY THE ENGINEER FOR ONLY REINFORCED CONCRETE PIPE AND DUCTILE IRON PIPE. THE INITIAL BACKFILL FOR ALL OTHER PIPES SHALL BE AASHTO NO. 57 GRANULAR PIPE EMBEDMENT.

CLASS QC-1: CLASS QC-1 PIPE EMBEDMENT SHALL ONLY BE USED FOR DUCTILE IRON WATER MAIN (4" AND LARGER), DUCTILE IRON FORCE MAINS OR AS AUTHORIZED BY THE ENGINEER. THE BEDDING AND PIPE EMBEDMENT SHALL BE SAND OR PEA GRAVEL IN ALL AREAS.

4. FINAL BACKFILL: IN ALL AREAS UNDER PAVEMENT, STRUCTURES OR WITHIN THE ZONE OF INFLUENCE THE FINAL BACKFILL SHALL BE ODOT ITEM 304. IN ALL AREAS OUTSIDE OF PAVEMENT, STRUCTURES OR THE ZONE OF INFLUENCE, THE FINAL BACKFILL SHALL BE SUITABLE ON-SITE MATERIAL APPROVED BY THE ENGINEER.

5. SPECIFICATIONS: ALL TRENCHING, PIPE EMBEDMENT AND BACKFILL MATERIALS SHALL BE IN ACCORDANCE WITH SP611 AS MODIFIED BY THIS DETAIL AND THE CONTRACT DOCUMENTS.

6. CLAY TRENCH DAMS: CLAY TRENCH DAMS SHALL BE REQUIRED AS SHOWN ON PLANS OR WHEN AND WHERE NECESSARY AS DIRECTED BY THE ENGINEER.

7. DETECTOR TAPE: IF REQUIRED IN THE SPECIFICATIONS, INSTALL DETECTABLE WARNING TAPE ABOVE UTILITIES, 12" BELOW FINISHED GRADE, EXCEPT 6 INCHES BELOW SUBGRADE UNDER PAVEMENT AND SLABS.

8. APPLICABLE FOR ALL SITE STORM SEWER, SANITARY SEWER AND WATER MAINS.

TRENCHING, EMBEDMENT & BACKFILL DETAIL FOR STORM SEWER, SANITARY SEWER & WATER MAIN

N.T.S.

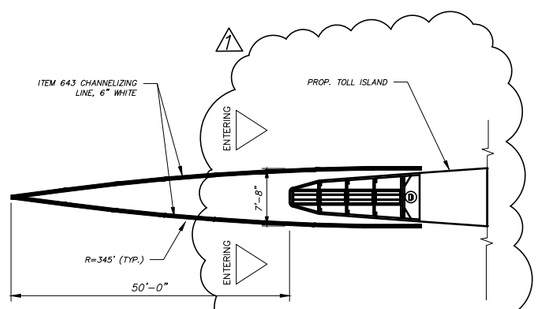

PAVEMENT MARKING DETAIL FOR PROPOSED ENTRANCE/EXIT LANES

N.T.S.

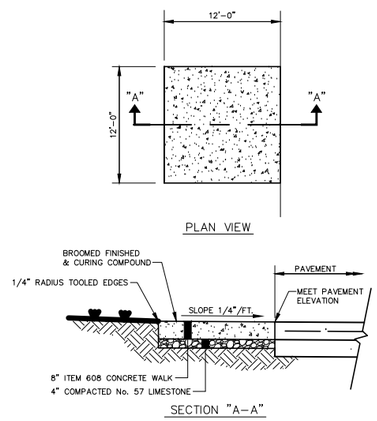

NOTE:
USE SECTION A-A FOR THE CONSTRUCTION OF THE PARKING STALL AREA PAVEMENT.

CONCRETE PAD FOR TRASH RECEPTACLE DETAIL

N.T.S.

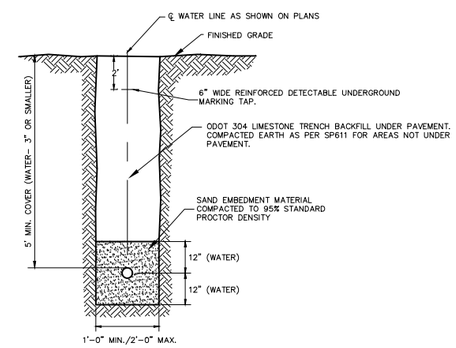

WATER LINE (3" OR SMALLER) TRENCH DETAIL

N.T.S.

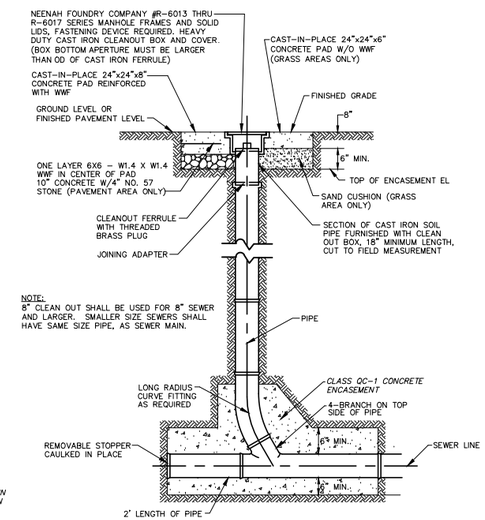

NOTE:
8" CLEAN OUT SHALL BE USED FOR 8" SEWER AND LARGER. SMALLER SIZE SEWERS SHALL HAVE SAME SIZE PIPE, AS SEWER MAIN.

STANDARD CLEAN-OUT DETAIL

N.T.S.

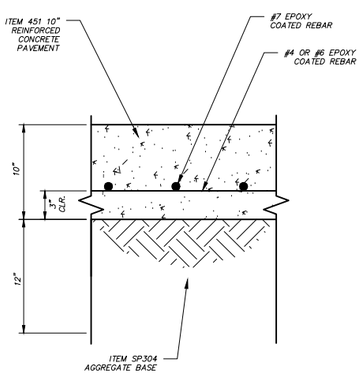

CONCRETE PAVEMENT DETAIL

N.T.S.

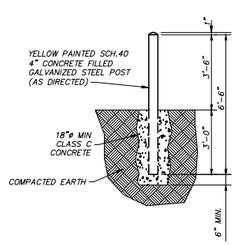

TYPICAL 4" BOLLARD DETAIL

N.T.S.

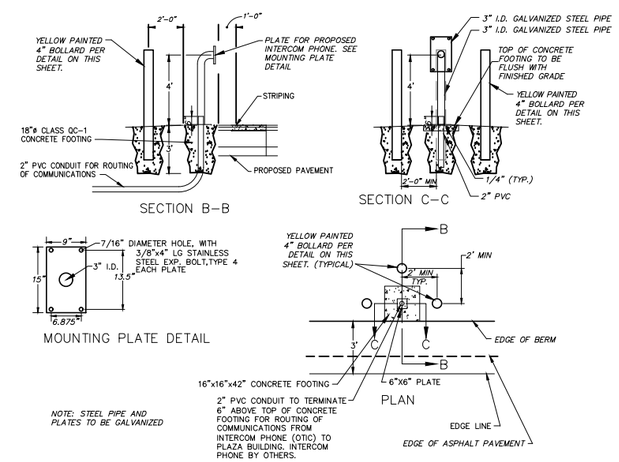

NOTE: STEEL PIPE AND PLATES TO BE GALVANIZED

INTERCOM PHONE PAD & SUPPORT DETAIL

N.T.S.

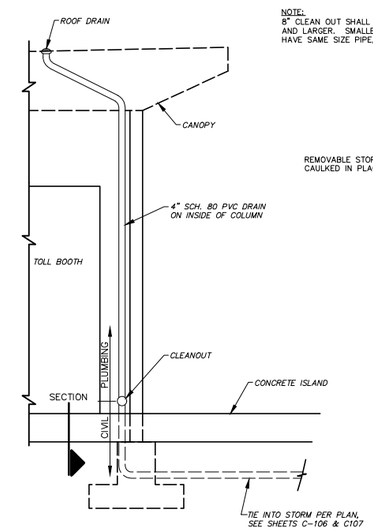

ROOF DRAIN DETAIL

N.T.S.

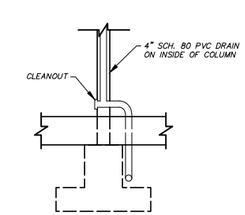

SECTION

N.T.S.

DESIGN AGENCY
PRIME AE
540 White Pond Drive, Ste E
Akron, Ohio 44320
(330)-864-7755

NO.	REVISIONS	BY	DATE
1	Bulletin No. 11	LHB	7-21-21

DESIGNED	CHECKED	NO.
LHBJ	SMM	1
DRAWN	IN CHARGE	
LHBJ	SMM	

OHIO TURNPIKE COMMISSION

OHIO TURNPIKE AND INFRASTRUCTURE COMMISSION

MISCELLANEOUS SITE DETAILS

LUCUS COUNTY

TP49

PROJECT 58-21-01

DATE: 04/17/2020

C119

4/3/2019 10:19:50 AM
C:\Users\bbowe\Documents\by Document\Ohio Turnpike\M18_TP4\TP211 TP239_18468\TP211\Design\Sheets\TP211_C-115,116,117,119_Bull-11.dwg; 7/21/2021 1:04 PM; bw bowes

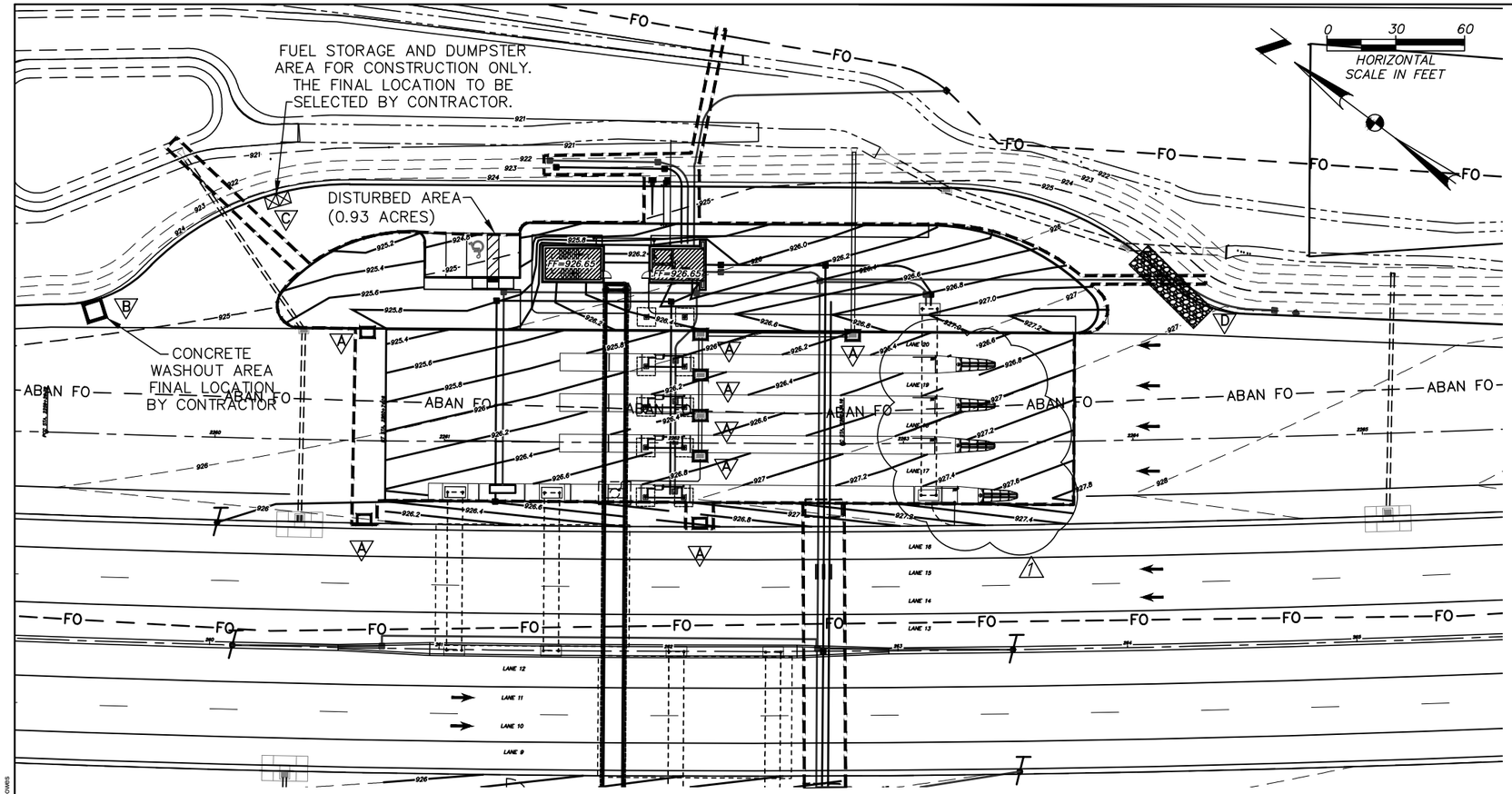

TEMPORARY STABILIZATION

AREAS REQUIRING TEMPORARY STABILIZATION	*TIME FRAME TO APPLY EROSION CONTROLS*
ANY AREAS WITHIN 50 FEET OF A STREAM AND NOT AT FINAL GRADE	WITHIN TWO DAYS OF THE MOST RECENT DISTURBANCE IF THE AREA WILL REMAIN IDLE FOR MORE THAN 14 DAYS
FOR ALL CONSTRUCTION ACTIVITIES, ANY DISTURBED AREAS THAT WILL BE DORMANT FOR MORE THAN 14 DAYS BUT LESS THAN ONE YEAR, AND NOT WITHIN 50 FEET OF A STREAM	WITHIN SEVEN DAYS OF THE MOST RECENT DISTURBANCE WITHIN THE AREA FOR RESIDENTIAL SUBDIVISIONS, DISTURBED AREAS MUST BE STABILIZED AT LEAST SEVEN DAYS PRIOR TO TRANSFER OF PERMIT COVERAGE FOR THE INDIVIDUAL LOT(S).
DISTURBED AREAS THAT WILL BE IDLE OVER WINTER	PRIOR TO THE ONSET OF WINTER WEATHER

PERMANENT STABILIZATION

AREAS REQUIRING PERMANENT STABILIZATION	*TIME FRAME TO APPLY EROSION CONTROLS*
ANY AREAS THAT WILL LIE DORMANT OF ONE YEAR OR MORE	WITHIN SEVEN DAYS OF THE MOST RECENT DISTURBANCE
ANY AREAS WITHIN 50 FEET OF A STREAM AND AT FINAL GRADE	WITHIN TWO DAYS OF REACHING FINAL GRADE
ANY OTHER AREAS AT FINAL GRADE	WITHIN SEVEN DAYS OF REACHING FINAL GRADE WITHIN THAT AREA

OHIO UTILITIES PROTECTION SERVICE
CALL BEFORE YOU DIG
800-362-2764 OR 8-1-1
WWW.OUPS.ORG

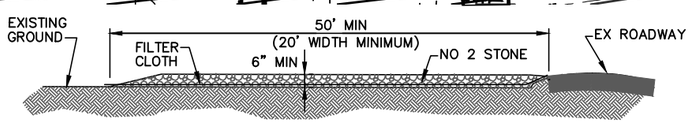

CONSTRUCTION ENTRANCE DETAIL (D)

NO SCALE

CONSTRUCTION SPECIFICATIONS

STONE SIZE– NO. 2 (2–1/2" TO 1–1/2") OR ITS EQUIVALENT.

LENGTH – AS EFFECTIVE, BUT NOT LESS THAN 50 FEET.

THICKNESS – NOT LESS THAN SIX (6) INCHES

WIDTH – TWENTY (20) FOOT MINIMUM, BUT NOT LESS THAN FULL WIDTH OF ALL POINTS OF INGRESS OR EGRESS.

FILTER CLOTH – WILL BE PLACED OVER THE ENTIRE AREA PRIOR TO PLACING THE STONE.

SURFACE WATER – ALL SURFACE WATER FLOWING OR DIVERTED TOWARD CONSTRUCTION ENTRANCES SHALL BE PIPED ACROSS THE ENTRANCE. IF PIPING IS IMPRACTICAL, A MOUNTABLE BERM WITH 5:1 SLOPES WILL BE PERMITTED.

MAINTENANCE – THE ENTRANCE SHALL BE MAINTAINED IN A CONDITION WHICH WILL PREVENT TRACKING OR FLOWING OF SEDIMENT ONTO PUBLIC RIGHT–OF–WAY. THIS MAY REQUIRE PERIODIC TOP DRESSING WITH ADDITIONAL STONE AS CONDITIONS DEMAND AND REPAIR AND/OR CLEAN–OUT OF ANY MEASURES USED TO TRAP SEDIMENT. ALL SEDIMENT SPILLED, DROPPED, WASHED OR TRACKED ONTO PUBLIC RIGHT–OF–WAY MUST BE REMOVED IMMEDIATELY.

WASHING – WHEN NECESSARY, WHEELS SHALL BE CLEANED TO REMOVE SEDIMENT PRIOR TO ENTRANCE ONTO PUBLIC RIGHT–OF–WAY. WHEN WASHING IS REQUIRED, IT SHALL BE DONE ON AN AREA STABILIZED WITH CRUSHED STONE WHICH DRAINS INTO AN APPROVED SEDIMENT TRAP. ALL SEDIMENT SHALL BE PREVENTED FROM ENTERING ANY STORM DRAIN, DITCH, OR WATERCOURSE THROUGH USE OF SAND BAGS, GRAVEL, BOARDS OR OTHER APPROVED METHODS.

PERIODIC INSPECTION AND NEEDED MAINTENANCE SHALL BE PROVIDED AFTER EACH RAIN EVENT.

SEDIMENT & SOIL EROSION LEGEND

- (A) : CATCH BASIN PROTECTION
- (B) : CONCRETE WASHOUT AREA
- (C) : FUEL STORAGE AND DUMPSTER
- (D) : CONSTRUCTION ENTRANCE DRIVE

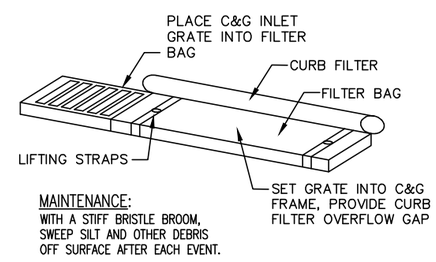

MAINTENANCE:
WITH A STIFF BRISTLE BROOM, SWEEP SILT AND OTHER DEBRIS OFF SURFACE AFTER EACH EVENT.

CURB INLET PROTECTION WITH GRATE (A)

NO SCALE

NOTE:
PER OEPA, THE CONTRACTOR MUST UTILIZE A LINER FOR THE CONCRETE WASHOUT AREA.

CONCRETE TRUCKS SHALL USE THESE AREAS TO WASHOUT TRUCKS. THE ACCUMULATED CONCRETE SHALL BE REMOVED FROM THE SITE AND DISPOSED OF PROPERLY.

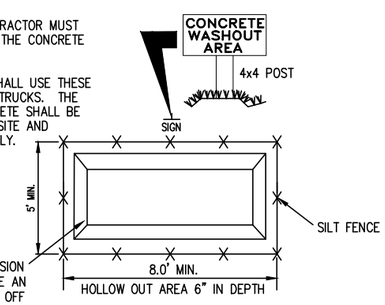

PLASTIC LINE DEPRESSION FOR REMOVAL OR USE AN ABOVE GROUND ROLL OFF BOX WITH LINER AS AN ALTERNATE.

CONCRETE WASHOUT AREA (B)

NO SCALE

SWPP GENERAL NOTES

CONTRACTOR RESPONSIBILITY: DETAILS HAVE BEEN PROVIDED ON THE PLANS IN AN EFFORT TO HELP THE CONTRACTOR PROVIDE EROSION AND SEDIMENTATION CONTROL. THE DETAILS SHOWN ON THE PLAN SHALL BE CONSIDERED A MINIMUM. ADDITIONAL OR ALTERNATE DETAILS MAY BE FOUND IN THE O.D.N.R. MANUAL 'RAINWATER AND LAND DEVELOPMENT.' THE CONTRACTOR SHALL BE SOLELY RESPONSIBLE FOR PROVIDING NECESSARY AND ADEQUATE MEASURES FOR PROPER CONTROL OF EROSION AND SEDIMENT RUNOFF FROM THE SITE ALONG WITH PROPERTY MAINTENANCE AND INSPECTION IN COMPLIANCE WITH NPDES GENERAL PERMIT FOR STORM WATER DISCHARGES ASSOCIATED WITH CONSTRUCTION ACTIVITY.

PRIOR TO CONSTRUCTION OPERATIONS IN A PARTICULAR AREA, ALL SEDIMENTATION AND EROSION CONTROL FEATURES SHALL BE IN PLACE. FIELD ADJUSTMENTS WITH RESPECT TO LOCATION AND DIMENSIONS MAY BE MADE BY THE ENGINEER.

THE CONTRACTOR SHALL PLACE INLET AND CHANNEL PROTECTION FOR EROSION CONTROL IMMEDIATELY AFTER CONSTRUCTION OF THE INLETS OR CHANNELS WHICH ARE NOT TRIBUTARY TO A SEDIMENT BASIN OR DAM.

IT MAY BECOME NECESSARY TO REMOVE PORTIONS OF THE BARRIER DURING CONSTRUCTION TO FACILITATE THE GRADING OPERATIONS IN CERTAIN AREAS. HOWEVER, THE BARRIER SHALL BE IN PLACE IN THE EVENING OR DURING ANY INCLEMENT WEATHER.

THE LIMITS OF SEEDING AND MULCHING ARE AS SHOWN WITHIN THE PLANS. THOSE AREAS DISTURBED OUTSIDE THE SEEDING LIMITS SHALL BE SEEDED AND MULCHED AT THE CONTRACTOR'S EXPENSE.

'TEMPORARY SEEDING' NO AREA FOR WHICH GRADING HAS BEEN COMPLETED OR WHERE A DENUDED AREA WILL REMAIN IDLE FOR MORE THAN 21 DAYS SHALL BE LEFT UNSEEDED FOR LONGER THAN 7 DAYS. IF PERMANENT SEED IS NOT APPLIED AT THIS TIME, TEMPORARY SEEDING SHALL BE DONE AT THE FOLLOWING RATES:

MARCH 1 TO NOVEMBER 15

SEED: OATS	2 LBS./1,000 S.F.
FERTILIZER: (12: 12:12)	25 LBS./1,000 S.F.
MULCH: (STRAW OR HAY)	2 TONS/ACRE

NOVEMBER 15 TO NOVEMBER 1:

SEED: ANNUAL RYE	2 LBS./1,000 S.F.
FERTILIZER: (12: 12:12)	25 LBS./1,000 S.F.
MULCH: (STRAW OR HAY)	2 TONS/ACRE

NOVEMBER 1 TO MARCH 1:

MULCH (ONLY): STRAW OR HAY 2 TONS/ACRE

"PERMANENT SEEDING" SHALL BE DONE BETWEEN MARCH 15 AND NOVEMBER 15. IF SEEDING IS DONE BETWEEN NOVEMBER 15 AND MARCH 15, IT SHALL BE CLASSIFIED AS 'TEMPORARY SEEDING.' PERMANENT SEED SHALL BE 40% KENTUCKY BLUEGRASS, 40% CREEPING RED FESCUE, 20% ANNUAL RYEGRASS. PERMANENT SEEDING SHALL CONSIST OF FERTILIZING, WATER AND SEEDING RATES INDICATED UNDER ITEM 659. SEEDING SHALL BE APPLIED WITHIN TWO (2) DAYS AFTER FINAL GRADING OR FOLLOWING SEED BED PREPARATION.

RATES OF APPLICATION OF ITEM 659:

SEED	4 LBS./1,000 S.F.
FERTILIZER: (12: 12: 12)	20 LBS./1,000 S.F.
MULCH: STRAW (HAY)	2 TONS/ACRE (3 TONS/ACRE)

MAINTENANCE: IT IS THE CONTRACTOR'S RESPONSIBILITY TO MAINTAIN THE SEDIMENT CONTROL FEATURES USED ON THIS PROJECT. THE SITE SHALL BE INSPECTED PERIODICALLY AND WITHIN 24 HOURS OF A SIGNIFICANT RAINFALL. RECORDS OF THESE INSPECTIONS SHALL BE KEPT AND MADE AVAILABLE TO JURISDICTIONAL AGENCIES IF REQUESTED. ANY SEDIMENT OR DEBRIS WHICH HAS REDUCED THE EFFICIENCY OF A STRUCTURE SHALL BE REMOVED IMMEDIATELY. SHOULD A STRUCTURE OR FEATURE BECOME DAMAGED, THE CONTRACTOR SHALL REPAIR OR REPLACE AT NO ADDITIONAL COST TO THE OWNER. NOT ALL DETAILS SHOWN ON THIS SHEET MAY BE REQUIRED FOR THIS PROJECT. REFERENCE SEDIMENT CONTROL PLAN.

THE COST FOR TEMPORARY CHANNELS, SEDIMENT DAMS, SEDIMENT BASINS, AND OTHER APPURTENANT EARTHMOVING OPERATIONS SHALL BE INCLUDED IN THE PRICE BID FOR EROSION AND SEDIMENTATION CONTROL QUANTITIES.

THE CONTRACTOR SHALL BE RESPONSIBLE TO ENSURE THAT OFF–SITE TRACKING OF SEDIMENTS BY VEHICLES AND EQUIPMENT IS MINIMIZED. ALL SUCH OFF–SITE SEDIMENT SHALL BE CLEANED UP DAILY. CONSTRUCTION OF STABILIZED CONSTRUCTION ENTRANCES ARE A PART OF THAT RESPONSIBILITY.

STREET CLEANING (ON AN AS–NEEDED BASIS) IS REQUIRED THROUGH THE DURATION OF THIS CONSTRUCTION PROJECT. THIS INCLUDES SWEEPING, POWER CLEANING AND (IF NECESSARY) MANUAL REMOVAL OF DIRT OR MUD IN THE STREET GUTTERS.

THE CONTRACTOR SHALL BE RESPONSIBLE TO ENSURE THAT NO SOLID OR LIQUID WASTE IS DISCHARGED INTO STORM WATER RUNOFF. SEDIMENT–LADEN WATER SHALL BE FILTERED THROUGH THE USE OF SEDIMENT FILTERING FENCES OR SEDIMENTATION BASINS PRIOR TO DISCHARGE TO SURFACE WATERS. CONCRETE TRUCKS WILL NOT BE ALLOWED TO WASH OUT OR DISCHARGE SURPLUS CONCRETE INTO OR ALONGSIDE RIVERS, STREAMS, AND CREEKS OR INTO NATURAL OR MAN–MADE CHANNELS OR SWALES LEADING THERETO. CONCRETE TRUCK WASH WATER AND SURPLUS CONCRETE SHALL BE CONFINED TO AREAS APPROVED BY THE ENGINEER; AFTER SOLIDIFYING, THESE WASTE MATERIALS SHALL BE REMOVED FROM THE SITE.

ALL EROSION AND SEDIMENT CONTROL PRACTICES ARE SUBJECT TO FIELD INSPECTIONS.

NOTE:

THIS PLAN MUST BE POSTED ON–SITE. A COPY OF THE SWPP PLAN AND THE APPROVED EPA STORM WATER PERMIT (WITH THE SITE SPECIFIC NOI NUMBER, IF REQUIRED) SHALL BE KEPT ON–SITE AT ALL TIMES.

THE CONTRACTOR SHALL BE RESPONSIBLE FOR MAINTAINING ON–SITE DRAINAGE AT ALL TIMES DURING CONSTRUCTION. NO SEPARATE PAYMENT SHALL BE MADE FOR MAINTAINING DRAINAGE.

DESIGN AGENCY
PRIME AE
540 White Pond Drive, Ste E
Akron, Ohio 44320
(330)-864-7755

NO.	REVISIONS	BY	DATE
1	Addendum No. 1	LHB	7–21–21

DESIGNED	CHECKED	DRAWN	IN CHARGE
LHBJ	SMM	LHBJ	SMM

SWPP – NORTH SITE
LUCUS COUNTY
TP49

PROJECT 58-21-01
DATE: 04/17/2020

C120

OHIO TURNPIKE AND INFRASTRUCTURE COMMISSION

4/3/2019 10:19:50 AM
C:\Users\lewis\Documents\My Documents\Prime Projects\1618_TP4 TP49 TP211 TP239_18458\TP211\Design\Sheets\3-9_11-12_20-21_TP211_XG001.DWG, 7/21/2021 10:54 PM, lewis bowers

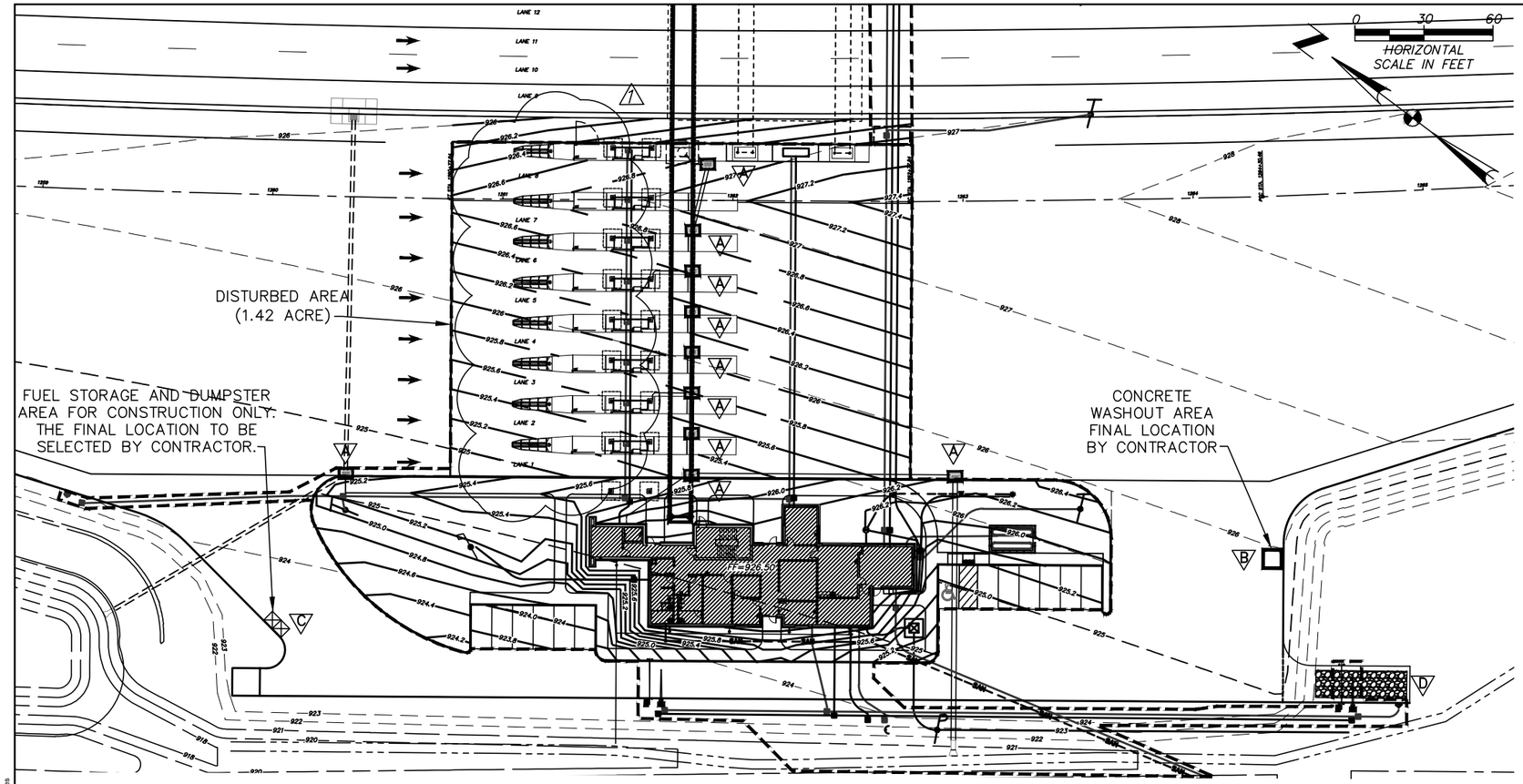

TEMPORARY STABILIZATION

AREAS REQUIRING TEMPORARY STABILIZATION	*TIME FRAME TO APPLY EROSION CONTROLS*
ANY AREAS WITHIN 50 FEET OF A STREAM AND NOT AT FINAL GRADE	WITHIN TWO DAYS OF THE MOST RECENT DISTURBANCE IF THE AREA WILL REMAIN IDLE FOR MORE THAN 14 DAYS
FOR ALL CONSTRUCTION ACTIVITIES, ANY DISTURBED AREAS THAT WILL BE DORMANT FOR MORE THAN 14 DAYS BUT LESS THAN ONE YEAR, AND NOT WITHIN 50 FEET OF A STREAM	WITHIN SEVEN DAYS OF THE MOST RECENT DISTURBANCE WITHIN THE AREA FOR RESIDENTIAL SUBDIVISIONS, DISTURBED AREAS MUST BE STABILIZED AT LEAST SEVEN DAYS PRIOR TO TRANSFER OF PERMIT COVERAGE FOR THE INDIVIDUAL LOT(S).
DISTURBED AREAS THAT WILL BE IDLE OVER WINTER	PRIOR TO THE ONSET OF WINTER WEATHER

PERMANENT STABILIZATION

AREAS REQUIRING PERMANENT STABILIZATION	*TIME FRAME TO APPLY EROSION CONTROLS*
ANY AREAS THAT WILL LIE DORMANT OF ONE YEAR OR MORE	WITHIN SEVEN DAYS OF THE MOST RECENT DISTURBANCE
ANY AREAS WITHIN 50 FEET OF A STREAM AND AT FINAL GRADE	WITHIN TWO DAYS OF REACHING FINAL GRADE
ANY OTHER AREAS AT FINAL GRADE	WITHIN SEVEN DAYS OF REACHING FINAL GRADE WITHIN THAT AREA

OHIO UTILITIES PROTECTION SERVICE
CALL BEFORE YOU DIG
800-362-2764 OR 8-1-1
WWW.OUPS.ORG

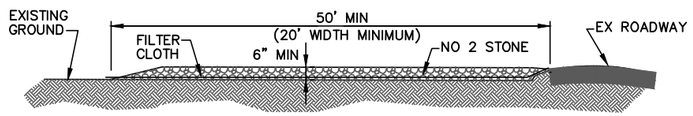

CONSTRUCTION ENTRANCE DETAIL (D)

NO SCALE

CONSTRUCTION SPECIFICATIONS

STONE SIZE– NO. 2 (2-1/2" TO 1-1/2") OR ITS EQUIVALENT.

LENGTH – AS EFFECTIVE, BUT NOT LESS THAN 50 FEET.

THICKNESS – NOT LESS THAN SIX (6) INCHES

WIDTH – TWENTY (20) FOOT MINIMUM, BUT NOT LESS THAN FULL WIDTH OF ALL POINTS OF INGRESS OR EGRESS.

FILTER CLOTH – WILL BE PLACED OVER THE ENTIRE AREA PRIOR TO PLACING THE STONE.

SURFACE WATER – ALL SURFACE WATER FLOWING OR DIVERTED TOWARD CONSTRUCTION ENTRANCES SHALL BE PIPED ACROSS THE ENTRANCE. IF PIPING IS IMPRACTICAL, A MOUNTABLE BERM WITH 5:1 SLOPES WILL BE PERMITTED.

MAINTENANCE – THE ENTRANCE SHALL BE MAINTAINED IN A CONDITION WHICH WILL PREVENT TRACKING OR FLOWING OF SEDIMENT ONTO PUBLIC RIGHT–OF–WAY. THIS MAY REQUIRE PERIODIC TOP DRESSING WITH ADDITIONAL STONE AS CONDITIONS DEMAND AND REPAIR AND/OR CLEAN–OUT OF ANY MEASURES USED TO TRAP SEDIMENT. ALL SEDIMENT SPILLED, DROPPED, WASHED OR TRACKED ONTO PUBLIC RIGHT–OF–WAY MUST BE REMOVED IMMEDIATELY.

WASHING – WHEN NECESSARY, WHEELS SHALL BE CLEANED TO REMOVE SEDIMENT PRIOR TO ENTRANCE ONTO PUBLIC RIGHT–OF–WAY. WHEN WASHING IS REQUIRED, IT SHALL BE DONE ON AN AREA STABILIZED WITH CRUSHED STONE WHICH DRAINS INTO AN APPROVED SEDIMENT TRAP. ALL SEDIMENT SHALL BE PREVENTED FROM ENTERING ANY STORM DRAIN, DITCH, OR WATERCOURSE THROUGH USE OF SAND BAGS, GRAVEL, BOARDS OR OTHER APPROVED METHODS.

PERIODIC INSPECTION AND NEEDED MAINTENANCE SHALL BE PROVIDED AFTER EACH RAIN EVENT.

SEDIMENT & SOIL EROSION LEGEND

(A) : CATCH BASIN PROTECTION

(B) : CONCRETE WASHOUT AREA

(C) : FUEL STORAGE AND DUMPSTER

(D) : CONSTRUCTION ENTRANCE DRIVE

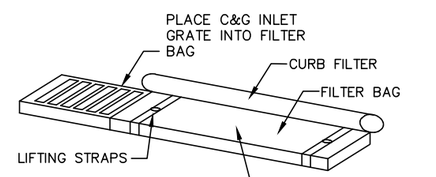

MAINTENANCE:
WITH A STIFF BRISTLE BROOM, SWEEP SILT AND OTHER DEBRIS OFF SURFACE AFTER EACH EVENT.

CURB INLET PROTECTION WITH GRATE (A)

NO SCALE

NOTE:
PER OEPA, THE CONTRACTOR MUST UTILIZE A LINER FOR THE CONCRETE WASHOUT AREA.

CONCRETE TRUCKS SHALL USE THESE AREAS TO WASHOUT TRUCKS. THE ACCUMULATED CONCRETE SHALL BE REMOVED FROM THE SITE AND DISPOSED OF PROPERLY.

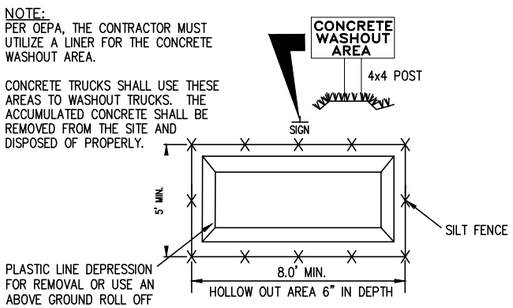

CONCRETE WASHOUT AREA (B)

NO SCALE

SWPP GENERAL NOTES

CONTRACTOR RESPONSIBILITY: DETAILS HAVE BEEN PROVIDED ON THE PLANS IN AN EFFORT TO HELP THE CONTRACTOR PROVIDE EROSION AND SEDIMENTATION CONTROL. THE DETAILS SHOWN ON THE PLAN SHALL BE CONSIDERED A MINIMUM. ADDITIONAL OR ALTERNATE DETAILS MAY BE FOUND IN THE O.D.N.R. MANUAL 'RAINWATER AND LAND DEVELOPMENT.' THE CONTRACTOR SHALL BE SOLELY RESPONSIBLE FOR PROVIDING NECESSARY AND ADEQUATE MEASURES FOR PROPER CONTROL OF EROSION AND SEDIMENT RUNOFF FROM THE SITE ALONG WITH PROPERTY MAINTENANCE AND INSPECTION IN COMPLIANCE WITH NPDES GENERAL PERMIT FOR STORM WATER DISCHARGES ASSOCIATED WITH CONSTRUCTION ACTIVITY.

PRIOR TO CONSTRUCTION OPERATIONS IN A PARTICULAR AREA, ALL SEDIMENTATION AND EROSION CONTROL FEATURES SHALL BE IN PLACE. FIELD ADJUSTMENTS WITH RESPECT TO LOCATION AND DIMENSIONS MAY BE MADE BY THE ENGINEER.

THE CONTRACTOR SHALL PLACE INLET AND CHANNEL PROTECTION FOR EROSION CONTROL IMMEDIATELY AFTER CONSTRUCTION OF THE INLETS OR CHANNELS WHICH ARE NOT TRIBUTARY TO A SEDIMENT BASIN OR DAM.

IT MAY BECOME NECESSARY TO REMOVE PORTIONS OF THE BARRIER DURING CONSTRUCTION TO FACILITATE THE GRADING OPERATIONS IN CERTAIN AREAS. HOWEVER, THE BARRIER SHALL BE IN PLACE IN THE EVENING OR DURING ANY INCLEMENT WEATHER.

THE LIMITS OF SEEDING AND MULCHING ARE AS SHOWN WITHIN THE PLANS. THOSE AREAS DISTURBED OUTSIDE THE SEEDING LIMITS SHALL BE SEEDED AND MULCHED AT THE CONTRACTOR'S EXPENSE.

'TEMPORARY SEEDING' NO AREA FOR WHICH GRADING HAS BEEN COMPLETED OR WHERE A DENUDED AREA WILL REMAIN IDLE FOR MORE THAN 21 DAYS SHALL BE LEFT UNSEEDED FOR LONGER THAN 7 DAYS. IF PERMANENT SEED IS NOT APPLIED AT THIS TIME, TEMPORARY SEEDING SHALL BE DONE AT THE FOLLOWING RATES:

MARCH 1 TO NOVEMBER 15

SEED: OATS	2 LBS./1,000 S.F.
FERTILIZER: (12: 12:12)	25 LBS./1,000 S.F.
MULCH: (STRAW OR HAY)	2 TONS/ACRE

NOVEMBER 15 TO NOVEMBER 1:

SEED: ANNUAL RYE	2 LBS./1,000 S.F.
FERTILIZER: (12: 12:12)	25 LBS./1,000 S.F.
MULCH: (STRAW OR HAY)	2 TONS/ACRE

NOVEMBER 1 TO MARCH 1:

MULCH (ONLY): STRAW OR HAY	2 TONS/ACRE

"PERMANENT SEEDING" SHALL BE DONE BETWEEN MARCH 15 AND NOVEMBER 15. IF SEEDING IS DONE BETWEEN NOVEMBER 15 AND MARCH 15, IT SHALL BE CLASSIFIED AS 'TEMPORARY SEEDING.' PERMANENT SEED SHALL BE 40% KENTUCKY BLUEGRASS, 40% CREEPING RED FESCUE, 20% ANNUAL RYEGRASS. PERMANENT SEEDING SHALL CONSIST OF FERTILIZING, WATER AND SEEDING RATES INDICATED UNDER ITEM 659. SEEDING SHALL BE APPLIED WITHIN TWO (2) DAYS AFTER FINAL GRADING OR FOLLOWING SEED BED PREPARATION.

RATES OF APPLICATION OF ITEM 659:

SEED	4 LBS./1,000 S.F.
FERTILIZER: (12: 12: 12)	20 LBS./1,000 S.F.
MULCH: STRAW (HAY)	2 TONS/ACRE (3 TONS/ACRE)

MAINTENANCE: IT IS THE CONTRACTOR'S RESPONSIBILITY TO MAINTAIN THE SEDIMENT CONTROL FEATURES USED ON THIS PROJECT. THE SITE SHALL BE INSPECTED PERIODICALLY AND WITHIN 24 HOURS OF A SIGNIFICANT RAINFALL. RECORDS OF THESE INSPECTIONS SHALL BE KEPT AND MADE AVAILABLE TO JURISDICTIONAL AGENCIES IF REQUESTED. ANY SEDIMENT OR DEBRIS WHICH HAS REDUCED THE EFFICIENCY OF A STRUCTURE SHALL BE REMOVED IMMEDIATELY. SHOULD A STRUCTURE OR FEATURE BECOME DAMAGED, THE CONTRACTOR SHALL REPAIR OR REPLACE AT NO ADDITIONAL COST TO THE OWNER. NOT ALL DETAILS SHOWN ON THIS SHEET MAY BE REQUIRED FOR THIS PROJECT. REFERENCE SEDIMENT CONTROL PLAN.

THE COST FOR TEMPORARY CHANNELS, SEDIMENT DAMS, SEDIMENT BASINS, AND OTHER APPURTENANT EARTHMOVING OPERATIONS SHALL BE INCLUDED IN THE PRICE BID FOR EROSION AND SEDIMENTATION CONTROL QUANTITIES.

THE CONTRACTOR SHALL BE RESPONSIBLE TO ENSURE THAT OFF–SITE TRACKING OF SEDIMENTS BY VEHICLES AND EQUIPMENT IS MINIMIZED. ALL SUCH OFF–SITE SEDIMENT SHALL BE CLEANED UP DAILY. CONSTRUCTION OF STABILIZED CONSTRUCTION ENTRANCES ARE A PART OF THAT RESPONSIBILITY.

STREET CLEANING (ON AN AS–NEEDED BASIS) IS REQUIRED THROUGH THE DURATION OF THIS CONSTRUCTION PROJECT. THIS INCLUDES SWEEPING, POWER CLEANING AND (IF NECESSARY) MANUAL REMOVAL OF DIRT OR MUD IN THE STREET GUTTERS.

THE CONTRACTOR SHALL BE RESPONSIBLE TO ENSURE THAT NO SOLID OR LIQUID WASTE IS DISCHARGED INTO STORM WATER RUNOFF. SEDIMENT–LADEN WATER SHALL BE FILTERED THROUGH THE USE OF SEDIMENT FILTERING FENCES OR SEDIMENTATION BASINS PRIOR TO DISCHARGE TO SURFACE WATERS. CONCRETE TRUCKS WILL NOT BE ALLOWED TO WASH OUT OR DISCHARGE SURPLUS CONCRETE INTO OR ALONGSIDE RIVERS, STREAMS, AND CREEKS OR INTO NATURAL OR MAN–MADE CHANNELS OR SWALES LEADING THERETO. CONCRETE TRUCK WASH WATER AND SURPLUS CONCRETE SHALL BE CONFINED TO AREAS APPROVED BY THE ENGINEER; AFTER SOLIDIFYING, THESE WASTE MATERIALS SHALL BE REMOVED FROM THE SITE.

ALL EROSION AND SEDIMENT CONTROL PRACTICES ARE SUBJECT TO FIELD INSPECTIONS.

NOTE:

THIS PLAN MUST BE POSTED ON–SITE. A COPY OF THE SWPP PLAN AND THE APPROVED EPA STORM WATER PERMIT (WITH THE SITE SPECIFIC NOI NUMBER, IF REQUIRED) SHALL BE KEPT ON–SITE AT ALL TIMES.

THE CONTRACTOR SHALL BE RESPONSIBLE FOR MAINTAINING ON–SITE DRAINAGE AT ALL TIMES DURING CONSTRUCTION. NO SEPARATE PAYMENT SHALL BE MADE FOR MAINTAINING DRAINAGE.

DESIGN AGENCY
PRIME AE
540 White Pond Drive, Ste E
Akron, Ohio 44320
(330)-864-7755

NO.	REVISIONS	BY	DATE
1	Addendum No. 1	LHB	7-21-21

DESIGNED	CHECKED	DRAWN	IN CHARGE
LHBJ	SMM	LHBJ	SMM

SWPP – SOUTH SITE
LUCUS COUNTY
TP49

PROJECT 58-21-01
DATE: 04/17/2020

C121

33
236

OHIO TURNPIKE AND INFRASTRUCTURE COMMISSION

4/3/2019 10:19:50 AM
C:\Users\lhbj\Documents\My Documents\Prime Engineering\18_TP4 TP49 TP211 TP239_18458\TP211\Design\Sheets\3-9_11-12_20-21_TP211_XG001.DWG, 7/21/2021 10:57 PM, lew boxes