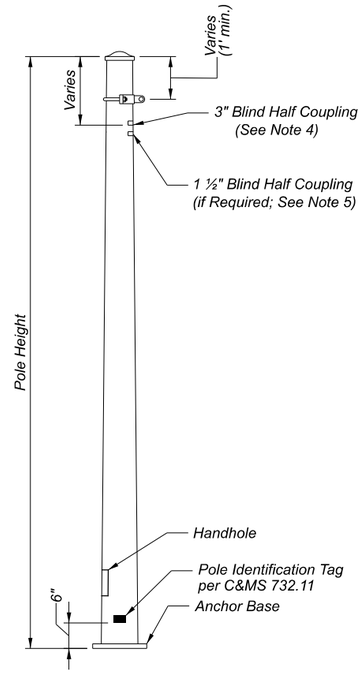

TAPERED TUBE

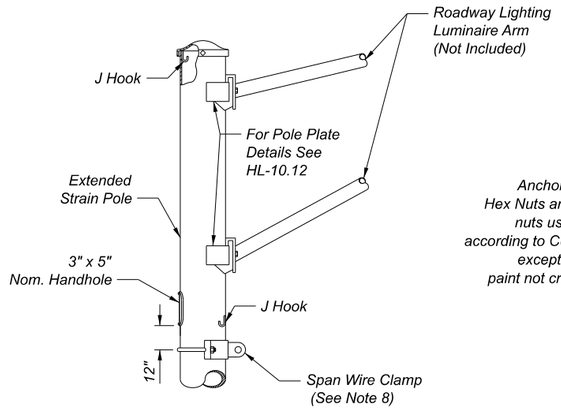

COMBINATION POLE

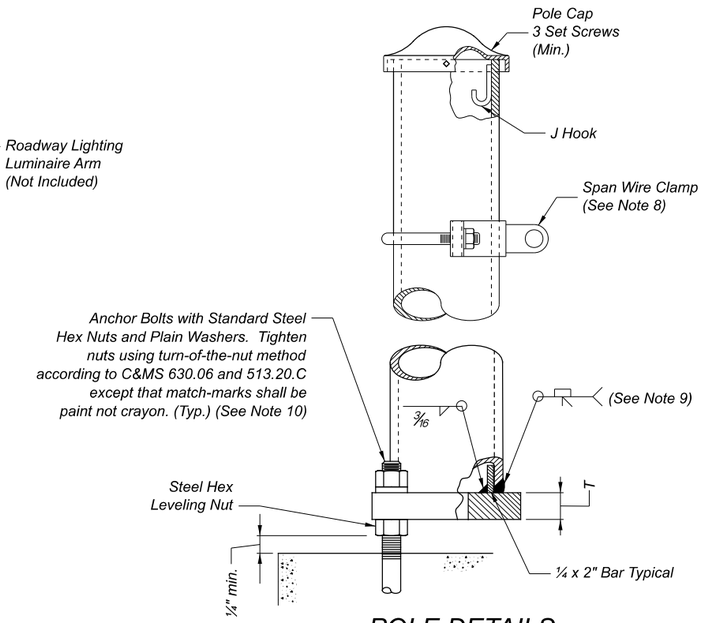

POLE DETAILS

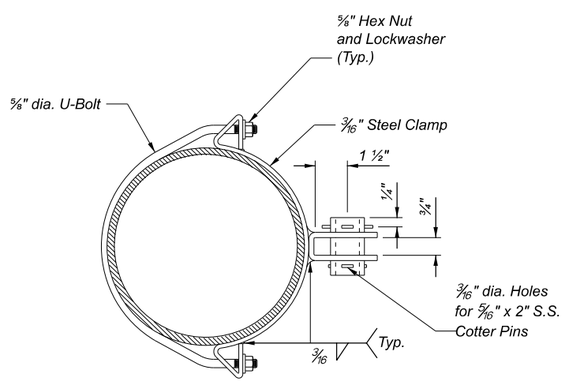

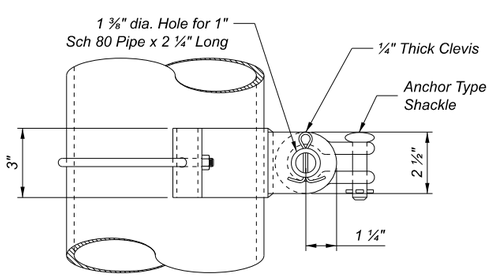

SPAN WIRE CLAMP

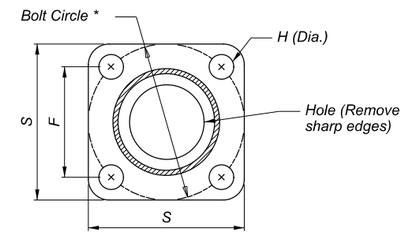

BASE PLATE

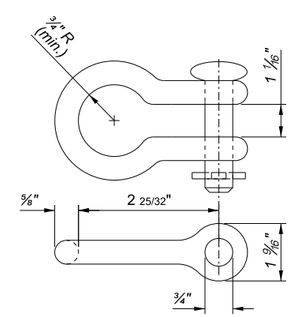

ANCHOR TYPE SHACKLE

NOTES:

1. The design of the Strain Poles presented on this drawing meets the requirements of the AASHTO LRFD Specifications for Structural Supports for Highway Signs, Luminaires, and Traffic Signals, First Edition 2015 (LRFDLTS-1) and all interim releases prior to the bid date of the project.
2. Dimensions noted as required shall be as indicated on the drawing and shall not be altered.
3. Calculations are required for any modifications to the information shown on this drawing. Modifications shall meet the requirements of LRFDLTS-1 and the design criteria shown in Note 23. Calculations shall be stamped by a Professional Engineer registered in the State of Ohio and shall be submitted for review and approval with the shop drawings.
4. Signal cable entrance shall be a 3" blind half coupling provided in each pole.
5. Service wire entrance shall be a 1 ½" blind half coupling, when required by the plans. Orientation and height shall be as required by the plans.
6. Span wire clamp shall be galvanized steel, capable of resisting a load of 12,500 pounds minimum without permanent distortion. Alternate messenger wire assembly (wrapping) as shown on Standard Construction Drawing (SCD) TC-17.11 or TC-84.20 may be used in lieu of the span wire clamp if specified in the plans.
7. For foundation details, including anchor bolt details, see SCD TC-21.21.
8. Alternate messenger wire assemblies (wrapping) as shown on SCD TC-17.11 or TC-84.20 may be used in lieu of the span wire clamp if specified in the plans.
9. The pole attachment to the base plate shall be welded using a full penetration weld.
10. A minimum of one full bolt thread shall remain above the anchor nut.
11. All unused couplings shall be provided with a removable galvanized cast iron plug.
12. For construction details and location of handholes, see SCD TC-22.10.
13. For pole and base plate dimensions, see sheet 2.

(cont'd - see sheet 2)

LEGEND:

* = Required dimension see Note 2

OFFICE OF ROADWAY ENGINEERING

REVISIONS
04-17-2020 (NEW)

STDS ENGINEER
Duemmel

STATE OF OHIO DEPARTMENT OF TRANSPORTATION ADMINISTRATOR
David L. Holstein

STRAIN POLE DETAILS

DESIGN AGENCY

SCD NUMBER
TC-81.11

SHEET 1 TOTAL 2

ALL DIMENSIONS IN INCHES, UNLESS OTHERWISE NOTED

DESIGN NO.	POLE HEIGHT (FT)	MAXIMUM FACTORED FLEXURAL RESISTANCE AT BASE (FT KIPS)	BASE DIAMETER	MINIMUM WALL THICKNESS	ANCHOR BASE				
					BOLT CIRCLE*	F	S	T	H
8	30	206	16	.250	22	15.556	22	2	2
10	32	270	16	.3125	22	15.556	27	2	2
12	32	385	19	.3125	25	17.678	30	2	2
13	32	590	21	.375	27	19.092	32	2	2
14	32	900	22	.500	30	21.213	35	2	2

* = Required dimension, See Note 2

NOTES: (cont'd from sheet 1)

14. Tapered poles shall be one piece assemblies conforming to ASTM A595 Grade A (minimum Yield Strength of 55,000 psi) with a constant linear taper of 0.14 inch/foot.

15. All material shall meet the requirements of C&MS 730 with the following limitations:

    Steel hardware - Galvanizing - ASTM A 153 (Hot-dipped) (Not ASTM B 695 Class 50)

16. Nuts shall meet the requirements of C&MS 730.08 and shall also meet the requirements of ASTM A 563 Grade DH or A 194 Grade 2H.

17. Flat washers shall meet the requirements of C&MS 730.08 and shall also meet the requirements of ASTM F 436.

18. Anchor bolts shall meet the requirements of C&MS 632, 711.02, 730.02 and 732.11 except that 730.02 shall be modified to require the galvanizing limits to be the full length of the anchor bolts not at least 2 inches beyond the threads.

19. Anchor bolt nuts shall meet the requirements of ASTM A 563 Grade DH or A 194 Grade 2H.

20. Anchor bolt washers shall meet the requirements of ASTM F 436 Type 1 (Hot-dip galvanized) according to ASTM A 153.

21. Holes for high-strength bolts and bearing bolts shall meet the requirements of C&MS 513.19. Modifications to the holes must be approved by the Engineer. Enlarging or slotting holes to match mis-aligned anchor bolts will not be permitted.

22. All welds shall be inspected according to the requirements of C&MS 630.06 and AWS D1.1 Structural Welding Code - Steel. A report of the welding inspection shall be submitted to the ODOT Office of Material Management Structural Welding and Materials Engineer.

23. Design Criteria:

    Load Parameters:

    Wind Load: 700-year MRI Basic Wind Speed Map, 115 mph Design Wind Speed

    Service Life: Infinite per LRFDLTS-1 11.9.3

    Service I Wind Velocity: 76 mph per LRFDLTS-1 Table 3.4.1 and Figure 3.8-4b

    ADT: Greater than 10,000

    Serviceability Parameters:

    Rake (Pole Tilt): H/180 (H = pole height)

    Horizontal Deflection at Top of Pole: maximum 1.5% of pole height

    Slope at Top of Pole: maximum of 0.35 inch/foot (1.67 degrees) per LRFDLTS-1 10.4.2.1

OFFICE OF ROADWAY ENGINEERING

REVISIONS
04-17-2020 (NEW)

STDS ENGINEER
Duemmel

STATE OF OHIO DEPARTMENT OF TRANSPORTATION ADMINISTRATOR
David L. Holstein

STRAIN POLE DETAILS

DESIGN AGENCY

SCD NUMBER
TC-81.11

SHEET 2 TOTAL 2