MAINTENANCE OF TRAFFIC SEQUENCE:

THESE PLANS ARE BASED ON THE FOLLOWING SUGGESTED SEQUENCE OF CONSTRUCTION.

PRE-PHASE 1
INSTALL CROSSOVER LIGHTING IN ACCORDANCE WITH OHIO DEPARTMENT OF TRANSPORTATION (ODOT) STANDARD CONSTRUCTION DRAWING (SCD) MT-100.00. PERFORM OUTSIDE SHOULDER RESTORATION AS SHOWN ON SHEET 11 .

PHASE 1
INSTALL THE NECESSARY TEMPORARY TRAFFIC CONTROL DEVICES IN ACCORDANCE WITH OTIC STANDARD DRAWING (SD) TCR-2 AND TCR-14, AND ODOT SCD MT-95.40 , AND AS SHOWN IN THE PLANS. CLOSE THE LEFT LANE OF EASTBOUND AND WESTBOUND OHIO TURNPIKE, MERGING THREE (3) LANES DOWN TO TWO (2) LANES AND SHIFTING THE EASTBOUND LANES TO THE OUTSIDE USING A COMBINATION OF THE EASTBOUND LANES AND PAVED SHOULDER.

REMOVE THE MEDIAN BARRIER IN BOTH OF THE CROSSOVER CONSTRUCTION AREAS AS SHOWN ON THE PLANS. INSTALL TEMPORARY DRAINAGE AND CONSTRUCT TEMPORARY MEDIAN PAVEMENT AS SHOWN IN THE MAINTENANCE OF TRAFFIC TYPICAL SECTIONS.

PHASE 2
INSTALL THE NECESSARY TEMPORARY TRAFFIC CONTROL DEVICES IN ACCORDANCE WITH OTIC SDS TCR-2 AND TCR-14, AND ODOT SCDS MT-95.40 AND MT-95.71 AND AS SHOWN ON THE PLANS.

UPON COMPLETION OF THE CROSSOVER, REDIRECT THE MERGED WESTBOUND TRAFFIC ACROSS THE MEDIAN AND ONTO THE EASTBOUND SIDE. CONDUCT DEMOLITION AND PROPOSED CONSTRUCTION ACTIVITIES ON THE WESTBOUND SIDE WHILE THE ROADWAY IS CLOSED TO TRAFFIC. SEE SHEETS 80 AND 81 FOR ADDITIONAL SEQUENCE OF CONSTRUCTION REGARDING EXCAVATION AND EMBANKMENT. THE EASTBOUND TRAFFIC SHALL REMAIN IN THE PHASE 1 CONFIGURATION.

PHASE 3
INSTALL THE NECESSARY TEMPORARY TRAFFIC CONTROL DEVICES IN ACCORDANCE WITH OTIC SDS TCR-2 AND TCR-14, AND ODOT SCDS MT-95.40 AND MT-95.71 AND AS SHOWN ON THE PLANS.

REDIRECT THE MERGED EASTBOUND LANES ACROSS THE MEDIAN AND ONTO THE WESTBOUND SIDE. CONDUCT DEMOLITION AND PROPOSED CONSTRUCTION ACTIVITIES IN THE EASTBOUND DIRECTION WHILE THE ROADWAY IS CLOSED TO TRAFFIC. SEE SHEETS 80 AND 81 FOR ADDITIONAL SEQUENCE OF CONSTRUCTION REGARDING EXCAVATION AND EMBANKMENT.

PHASE 4
LEAVE THE MERGED WESTBOUND TRAFFIC IN THE PHASE 3 CONFIGURATION AND SHIFT THE MERGED EASTBOUND TRAFFIC BACK TO THE NORMAL OUTSIDE EASTBOUND LANES WHILE THE CROSSOVER IS BEING REMOVED. INSTALL THE NECESSARY TEMPORARY TRAFFIC CONTROL DEVICES IN ACCORDANCE WITH OTIC SDS TCR-2 AND TCR-14, AND ODOT SCD MT-95.40, AND AS SHOWN IN THE PLANS.

REMOVE ALL TEMPORARY DRAINAGE AND PAVEMENT INSTALLED IN THE MEDIAN DURING PHASE 1. RESTORE MEDIAN SHOULDERS AND CONSTRUCT MEDIAN BARRIER.

PHASE 5
PERFORM RESURFACING AND GUARDRAIL WORK FOR AREAS OUTSIDE OF THE CONSTRUCTION ZONES SHOWN ON PHASE 2 AND PHASE 3 PLANS.

PERFORM ANY FINISH GRADING, APPLICATION OF FINAL PAVEMENT SURFACE, SIGNING, PAVEMENT MARKINGS AND ANY OTHER INCIDENTALS BEFORE REOPENING OHIO TURNPIKE TO FULL NORMAL OPERATIONS.

INTERIM MAINTENANCE OF TRAFFIC PHASES AND OPERATIONS

THE DETAILED MAINTENANCE OF TRAFFIC PLANS THAT ARE PRESENTED IN THE PLANS FOR THIS PROJECT REFLECT MAJOR PHASES OF CONSTRUCTION THAT ARE REQUIRED TO COMPLETE THE CONSTRUCTION OF THIS PROJECT. THE MAINTENANCE OF TRAFFIC PLANS ALSO INCLUDES QUANTITY CALCULATIONS FOR THESE MAJOR PHASES AS DEPICTED IN THE PLANS.

THERE ARE PERIODS DURING THE CONSTRUCTION OF THIS PROJECT WHERE THE CONTRACTOR SHALL BE REQUIRED TO PERFORM WORK TO ESTABLISH THESE MAJOR CONSTRUCTION PHASES OR TO TRANSITION INTO THE NEXT PHASE OF CONSTRUCTION WHICH SHOULD BE CONSIDERED AS INTERIM MAINTENANCE OF TRAFFIC PHASES.

DURING INTERIM MAINTENANCE OF TRAFFIC PHASES, THE CONTRACTOR SHALL BE RESPONSIBLE FOR ALL LABOR, MATERIALS, EQUIPMENT AND TEMPORARY TRAFFIC CONTROL DEVICES, INCLUDING IMPACT ATTENAUTORS, REQUIRED TO ESTABLISH THESE MAJOR PHASES OF CONSTRUCTION.

PAYMENT OF THE ABOVE NOTED WORK FOR INTERIM MAINTENANCE OF TRAFFIC PHASES AND OPERATIONS SHALL BE INCLUDED IN THE LUMP SUM BID FOR ITEM SP 614- MAINTAINING TRAFFIC, WHICH SHALL INCLUDE ALL LABOR, EQUIPMENT, MATERIALS AND INCIDENTALS REQUIRED TO COMPLETE THE WORK AS SPECIFIED ABOVE.

MAINTAINING TRAFFIC

GENERALLY, THE CONTRACTOR SHALL CONDUCT OPERATIONS AS TO COMPLETE THE PROPOSED IMPROVEMENT WITH A MINIMUM OF HAZARD, DELAY AND INCONVENIENCE TO THE MOTORISTS USING THE HIGHWAY AFFECTED BY THE WORK DONE UNDER THIS CONTRACT.

THE CONTRACTOR'S RESPONSIBILITY TO THE SAFETY OF THE MOTORING PUBLIC WHILE PERFORMING THE REQUIREMENTS OF THE CONTRACT SHALL BE IN ACCORDANCE WITH THESE TEMPORARY TRAFFIC CONTROL PLANS, THE SPECIFICATIONS AND SPECIAL PROVISIONS, THE CURRENT EDITION, LATEST REVISION OF THE "OHIO MANUAL OF UNIFORM TRAFFIC CONTROL DEVICES" (OMUTCD). IN ADDITION TO THE CONSTRUCTION AND MATERIAL SPECIFICATIONS, THE FOLLOWING SPECIFIC PROVISIONS ARE MANDATORY.

THE CONTRACTOR SHALL FURNISH, ERECT, MAINTAIN AND SUBSEQUENTLY REMOVE ALL TRAFFIC CONTROL DEVICES AS PER SP 614 MAINTAINING TRAFFIC, AND THE DETOUR PLANS INCLUDING BARRICADES AND SIGNS IN ACCORDANCE WITH THE OHIO TURNPIKE AND INFRASTRUCTURE COMMISSION (OTIC) STANDARD DRAWINGS AND OHIO DEPARTMENT OF TRANSPORTATION (ODOT) STANDARD CONSTRUCTION DRAWINGS AND THE OMUTCD. DETOUR SIGNS AND SUPPORTS SHALL BE ERECTED AND MAINTAINED BY THE CONTRACTOR.

I. WORK HOURS

ALL WORK SHALL BE PERFORMED IN ACCORDANCE WITH THE FOLLOWING SPECIAL PROVISION:

SP 106, HOURS OF WORK

II. LANE CLOSURE

ALL LANE CLOSURES SHALL BE IN ACCORDANCE WITH SP 614, THE OMUTCD AND APPLICABLE OTIC/ODOT STANDARD DRAWING(S).

OTIC TEMPORARY TRAFFIC CONTROL PHASE DATES, LANE REDUCTION TIME LIMITATIONS, AND LIQUIDATED DAMAGE CLAUSES ARE CONTAINED IN THE FOLLOWING SPECIAL PROVISIONS:

SP 103, CONSTRUCTION PHASING AND TIME OF COMPLETION
SP 104, ACCESS TO TURNPIKE AND RESTRICTIONS
SP 107, TIME OF ESSENCE - LIQUIDATED DAMAGES

III. MAINTENANCE OF TRAFFIC SYSTEMS

A. WHEN REQUIRED

WHENEVER ANY PART OF THE TRAVELED SURFACE IS BEING WORKED UPON OR IS OTHERWISE NOT SUITABLE FOR SAFE AND CONVENIENT USE BY VEHICLES, TRAFFIC CONTROL DEVICES SUFFICIENT TO PROTECT SUCH AREAS TO ASSURE THE SAFE AND CONVENIENT PASSAGE OF VEHICULAR TRAFFIC SHALL BE INSTALLED AND MAINTAINED. SUCH TRAFFIC CONTROL DEVICES AND THE MANNER IN WHICH THEY ARE USED SHALL BE CONSISTENT WITH THESE PLANS, SP 614, THE OMUTCD OR AS SHOWN IN THE OTIC/ODOT STANDARD DRAWING(S). THE TRAFFIC CONTROL DEVICE SYSTEM SHALL CONSTITUTE THE MINIMUM PROVISIONS FOR TRAFFIC CONTROL FOR EACH PARTICULAR SITUATION. WHENEVER THE ENGINEER DEEMS IT NECESSARY ESPECIALLY WHERE A GRADE, CURVE, OR MERGE CONDITIONS EXISTS, HE/SHE MAY DIRECT THAT ADDITIONAL OR ALTERNATIVE DEVICES BE USED.

B. CONDITIONS

DURING ALL PARTS OF THIS PROJECT, FLAGGERS, SIGNING, BARRICADES, FLASHING ARROWS, ETC. SHALL BE LOCATED AS INDICATED IN THE OMUTCD OR AS SHOWN IN THE OTIC/ODOT STANDARD DRAWING(S). TWO-WAY TRAFFIC SHALL BE MAINTAINED AT ALL TIMES.

C. ADVANCE WARNING SIGNS

ALL ADVANCE WARNING SIGNS FOR ANY CONDITION WHICH RESTRICTS TRAFFIC SHALL BE ERECTED BEFORE ANY SUCH RESTRICTION IS PUT INTO EFFECT. ALL SUCH SIGNS SHALL BE COVERED OR REMOVED FROM THE VIEW OF TRAFFIC WHENEVER THEY ARE NOT APPLICABLE.

D, FLASHING ARROW REQUIREMENT

WHENEVER ANY PART OF THE TRAVELED SURFACE IS CLOSED, THE MOTORISTS SHALL BE WARNED AND DIRECTED BY THE CONTRACTOR THROUGH THE USE OF ONE FLASHING ARROW FOR EACH LANE CLOSED. ADDITIONALLY, THE PROVISIONS SET FORTH IN SP 614, THE OMUTCD AND THE APPLICABLE OTIC/ODOT STANDARD DRAWING(S) SHALL BE MET.

E. FLAGGERS

THE CONTRACTOR SHALL FURNISH ADDITIONAL FLAGGERS AS DIRECTED BY THE ENGINEER.

F. MAINTENANCE OF TRAFFIC CONTROL ZONES

THE CONTRACTOR SHALL BE RESPONSIBLE TO MAINTAIN THE SIGNS, DRUMS AND TEMPORARY PAVEMENT MARKINGS AT THE LOCATIONS DETAILED IN THE PLANS OR SPECIFIED IN THE OTIC/ODOT STANDARD DRAWINGS. THE CONTRACTOR SHALL IMMEDIATELY CORRECT ANY DEFICIENCY IN TRAFFIC ZONE ALIGNMENT, EQUIPMENT, NUMBER OF DEVICES OR PROCEDURE OF FLAG PERSONS WHICH IS BROUGHT TO HIS/HER ATTENTION BY THE ENGINEER.

G. FAILURE TO COMPLY

IF THERE IS ANY FAILURE TO COMPLY WITH PROVISIONS FOR TRAFFIC CONTROL SET OUT IN THESE PLANS AND NOTES, OR WITH THE PROVISIONS OF SP 614, THE OMUTCD, OR AS SHOWN IN THE OTIC/ODOT STANDARD DRAWING(S), THE HIGHWAY IN THE VICINITY OF THE WORK AREA SHALL NOT BE CONSIDERED IN A CONDITION FOR THE SAFE AND CONVENIENT USE BY THE TRAVELING PUBLIC. ANY FAILURE TO KEEP THE HIGHWAY, IN THE VICINITY OF THE WORK AREA, IN A CONDITION FOR THE SAFE AND CONVENIENT USE BY THE TRAVELING PUBLIC SHALL BE CONSIDERED A BREACH OF THIS CONTRACT. WORK SHALL BE SUSPENDED UNTIL THE CONTRACTOR COMPLIES WITH THE PROVISIONS OF THE AFOREMENTIONED ITEMS.

IV. SAFETY

SAFETY AND CONTINUITY OF OPERATIONS OF TRAFFIC ON THE OHIO TURNPIKE SHALL BE OF THE UTMOST IMPORTANCE AND SHALL AT ALL TIMES BE PROTECTED AND SAFEGUARDED. THE CONTRACTOR SHALL DAILY, NOT LATER THAN 12 O'CLOCK PM (NOON), INFORM THE RESIDENT ENGINEER AS TO HIS PREPARATIONS AND METHOD OF WORK FOR THE FOLLOWING DAY WHENEVER SUCH WORK SHALL BE SUBMITTED TO THE CHIEF ENGINEER FOR HIS APPROVAL, WITHOUT WHICH IT SHALL NOT BE COMMENCED OR PROSECUTED.

V. MAINTENANCE OF TRAFFIC MATERIALS

A. SIGNS

SIGN DIMENSIONS AND SPECIFICATIONS, INCLUDING LETTER SIZES SHALL BE AS PROVIDED IN THE OMUTCD, OR IN OTIC/ODOT STANDARD DRAWING(S). THE SIGNS SHALL BE SUBJECT TO APPROVAL OF THE ENGINEER PRIOR TO THE START OF THE PROJECT.

B. GUARDRAIL DELINEATION

GUARDRAIL DELINEATION SHALL CONSIST OF SP 626 BARRIER REFLECTORS INSTALLED IN ACCORDANCE WITH THE MANUFACTURER'S PRINTED INSTRUCTIONS. THE DELINEATORS SHALL BE SPACED 100' (MIN), WITH ALL GUARDRAIL RUNS HAVING NO LESS THAN TWO (2) DELINEATORS (ONE DELINEATOR ON THE BEGIN AND ONE ON THE END OF THE GUARDRAIL RUN). DELINEATORS SHALL BE INSTALLED ON ALL TEMPORARY GUARDRAIL USED FOR TRAFFIC CONTROL AND ON ALL PERMANENT GUARDRAIL LOCATED WITHIN 5 FEET OF THE EDGE OF THE ADJACENT TRAVEL LANE.

1

PAYMENT FOR GUARDRAIL DELINEATION SHALL BE INCLUDED WITH ITEM SP 614 MAINTAINING TRAFFIC. SUCH PAYMENT SHALL INCLUDE PROVIDING, INSTALLING, MAINTAINING, REPLACING DAMAGED DELINEATORS AND REMOVING, AS SPECIFIED, FOR THE ABOVE SAID GUARDRAIL DELINEATION.

C. PORTABLE BARRIER

ALL PORTABLE BARRIERS SHOWN ON THE PLANS FOR MAINLINE TEMPORARY TRAFFIC CONTROL WILL BE AS PER SP 622. THE SAME BARRIER CAN BE USED FOR THE VARIOUS PHASES. THE COST FOR TRANSPORTING, INSTALLING, MAINTAINING, REMOVAL AND STORING THE PORTABLE BARRIER FOR EACH PHASE SHALL BE INCLUDED IN THE ORIGINAL UNIT COST OF SUPPLYING THE BARRIER FOR ITEM SP 622.

THE CONTRACTOR SHALL REPLACE ANY DAMAGED PORTABLE BARRIER WITHIN 24 HOURS OF A DAMAGING IMPACT.

VI. PAYMENT

ALL WORK AND TRAFFIC CONTROL DEVICES SHALL BE IN ACCORDANCE WITH SP 614, AS SHOWN IN THE OTIC/ODOT STANDARD DRAWING(S), ODOT CONSTRUCTION & MATERIAL SPECIFICATION (C&MS) AND OTHER APPLICABLE PORTIONS OF THE SPECIFICATIONS, AS WELL AS THE OMUTCD. PAYMENT FOR MAINTENANCE OF TRAFFIC ITEMS, UNLESS OTHERWISE SPECIFIED SEPARATELY, SHALL BE PAID FOR UNDER THE LUMP SUM BID FOR ITEM SP 614 - MAINTAINING TRAFFIC, WHICH SHALL INCLUDE ALL LABOR, EQUIPMENT MATERIALS AND INCIDENTALS REQUIRED TO COMPLETE THE WORK AS DETAILED IN THE PLAN.

PERMANENT PAVEMENT MARKINGS
AFTER PLACING THE SURFACE COURSE, THE CONTRACTOR MAY PLACE PERMANENT PAVEMENT MARKINGS INSTEAD OF PLACING WORK ZONE PAVEMENT MARKINGS, WHICH SHALL BE NON-PERFORMED AT THESE LOCATIONS.

PERMANENT PAVEMENT MARKINGS SHALL BE IN PLACE AS INDICATED IN THE PLANS PRIOR TO OPENING THE ROADWAY TO TRAFFIC.

COVERING OF GROUND-MOUNTED SIGNS- GENERAL
WHEN REQUIRED BY OTHER ITEMS OR INCIDENTALLY TO SP 614 MAINTAINING TRAFFIC, COVER EXISTING GROUND-MOUNTED SIGNS WITH PLYWOOD OR OSB BLANKS (1/2" MINIMUM THICKNESS) COVERING 80% OF THE SIGN AREA AND ALL OF THE SIGN LEGEND. THE USE OF LOW QUALITY MATERIALS SUCH AS DUCT TAPE AND BLACK PLASTIC IS NOT PERMITTED.

ITEM 630 - SIGNING MISC.: ADDITIONAL SIGNS. GROUND MOUNTED. AS DIRECTED BY THE ENGINEER
WHEN ADDITIONAL SIGNING IS NEEDED TO MAINTAIN TRAFFIC, THE CONTRACTOR SHALL FURNISH THE SIGN OR SIGNS AS DIRECTED BY THE ENGINEER. THESE SIGNS SHALL BE GROUND MOUNTED AND MEET ALL THE SPECIFICATIONS OF THE PLAN, PROPOSAL AND CURRENT YEAR CMS.

PAYMENT FOR THIS ITEM SHALL INCLUDE, BUT NOT BE LIMITED TO, THE COST TO FURNISH AND ERECT THE SIGN, INCLUDING DRIVING POSTS OR OTHER APPROVED METHODS OF SIGN SUPPORT, MAINTAINING THE SIGN AND REMOVAL OF THE SIGN. THE FOLLOWING ESTIMATED QUANTITY HAS BEEN CARRIED TO THE GENERAL SUMMARY FOR USE AS DIRECTED BY THE ENGINEER:

ITEM 630 - SIGNING MISC.: ADDITIONAL SIGNS, GROUND MOUNTED, AS DIRECTED BY THE ENGINEER..... 16 SQ. FT.

ITEM 614 - REPLACEMENT SIGN
FLAT SHEET SIGNS FURNISHED BY THE CONTRACTOR IN ACCORDANCE WITH THE REQUIREMENTS OF THE PLANS, SPECIFICATIONS AND PROPOSAL WHICH BECOME DAMAGED BY TRAFFIC FOR REASONS BEYOND THE CONTROL OF THE CONTRACTOR SHALL BE REPLACED IN KIND WHEN ORDERED BY THE CHIEF ENGINEER. REPLACEMENT SIGNS SHALL BE NEW. OTHER MATERIALS MAY BE IN USED, BUT GOOD, CONDITION SUBJECT TO APPROVAL BY THE CHIEF ENGINEER.

PAYMENT FOR THE NEW SIGNS SHALL BE MADE AT THE CONTRACT PRICE PER EACH FOR ITEM 614, REPLACEMENT SIGN, AND SHALL INCLUDE THE COST OF REMOVING AND DISPOSING OF DAMAGED SIGNS, HARDWARE AND SUPPORTS, AND PROVIDING THE NECESSARY REPLACEMENT HARDWARE, SUPPORTS, ETC. THE FOLLOWING ESTIMATED QUANTITY HAS BEEN CARRIED TO THE GENERAL SUMMARY FOR USE AS DIRECTED BY THE ENGINEER:

ITEM 614 -REPLACEMENT SIGN..... 5 EACH

CONSTRUCTION TRAFFIC
ALL CONSTRUCTION TRAFFIC SHALL USE ACCEPTABLE TRUCK ROUTES TO ACCESS THE CONSTRUCTION AREA. USE OF LOCAL RESIDENTIAL STREETS IS STRICTLY PROHIBITED UNLESS ALLOWED IN WRITING BY THE LOCAL ENFORCEMENT AUTHORITY.

SUSPENSION OF WORK
IF THE CONTRACTOR FAILS TO COMPLY WITH THE PROVISIONS FOR TRAFFIC CONTROL AS SET FORTH IN THESE PLANS OR WITH PROVISIONS OF THE OHIO MANUAL OF UNIFORM TRAFFIC CONTROL DEVICES, THE CHIEF ENGINEER WILL SUSPEND WORK UNTIL THE CONTRACTOR COMPLIES WITH THE NECESSARY REQUIREMENTS.

ITEM SP 621 - RAISED PAVEMENT MARKERS
ALL RAISED PAVEMENT MARKER REFLECTORS WHICH ARE IN CONFLICT WITH THE PROPOSED MAINTENANCE OF TRAFFIC PAVEMENT MARKINGS ARE TO BE REMOVED. THE FOLLOWING ESTIMATED QUANTITIES HAVE BEEN INCLUDED IN THE GENERAL SUMMARY FOR USE AS DIRECTED BY THE CHIEF ENGINEER FOR CONTINGENCY PURPOSES ONLY.

ITEM SP 621 - REPLACEMENT PRISMATIC RETRO-REFLECTOR .....101 EACH

ITEM SP 622 - PORTABLE BARRIER (WITHOUT GLARE SCREEN), AS PER PLAN
INSTALL PORTABLE BARRIER (WITHOUT GLARE SCREEN) AT LOCATIONS NOTED IN THE PLANS PER SP 622, EXCEPT THE UNIT OF PAY FOR THIS ITEM SHALL BE LINEAR FEET.

ITEM SP 622 - PORTABLE BARRIER (WITH GLARE SCREEN), AS PER PLAN
INSTALL PORTABLE BARRIER (WITH GLARE SCREEN) AT LOCATIONS NOTED IN THE PLANS PER SP 622, EXCEPT THE UNIT OF PAY FOR THIS ITEM SHALL BE LINEAR FEET.

DESIGN AGENCY
ONE EASTON OVAL
SUITE 400
COLUMBUS, OH 43219
T 614-476-6000
F 614-476-6225
WOOLPERT

NO.	REVISIONS	BY	DATE
1	ADDENDUM 4	MWZ	05/23
-	-	-	-
-	-	-	-

DESIGNED	CHECKED	DESIGN ENGINEER
SDO	JDB	MWZ
DRAWN	IN CHARGE	
VT	MWZ	

MAINTENANCE OF TRAFFIC GENERAL NOTES
OHIO TURNPIKE OVER TINKERS CREEK
SUMMIT COUNTY
M.P. 185.6

PROJECT 43-23-04
DATE: 1/17/23

OHIO TURNPIKE AND INFRASTRUCTURE COMMISSION

FinalPlansBind_81533_MN001.dwg; 5/09/23 - 4:27pm

ITEM 642 -PAVEMENT MARKING MISC: FINAL PAVEMENT MARKING PREPARATION

THIS ITEM SHALL CONSIST OF APPLYING A BASE LAYER OF PAVEMENT MARKING PRIOR TO THE PLACEMENT OF FINAL MARKINGS.

IF FINAL PAVEMENT MARKING WILL BE PLACED WHERE 614.11 OR SP 614B PAVEMENT MARKINGS WERE REMOVED BY EITHER SP 614C GRINDING METHOD OR WATER-BLAST METHOD, THEN THE ASPHALT PAVEMENT MUST FIRST BE PREPPED BY APPLYING A BLACK SHADOW MARKING. THE BLACK SHADOW MARKING SHALL CREATE A 1-INCH BORDER AROUND THE FINAL MARKING BEING PLACED.

THE BLACK SHADOW MARKING SHALL BE NON-REFLECTIVE AND PLACED AT THE SAME RATE AS ITEM 642 TYPE 1 MARKINGS.

THE FOLLOWING ESTIMATED QUANTITIES HAVE BEEN CARRIED TO THE GENERAL SUMMARY FOR USE AT LOCATIONS IDENTIFIED BY THE ENGINEER PRIOR TO THE PLACEMENT OF WORK ZONE PAVEMENT MARKINGS.

ITEM 642-PAVEMENT MARKING MISC.: FINAL PAVEMENT MARKING PREPARATION.....0.90 MILE

ITEM 614 - WORK ZONE IMPACT ATTENUATOR, 24" WIDE HAZARDS, (UNIDIRECTIONAL)

THIS ITEM SHALL CONSIST OF FURNISHING AND INSTALLING A NON-GATING IMPACT ATTENUATOR. FURNISH AN IMPACT ATTENUATOR FROM THE OFFICE OF ROADWAY ENGINEERING APPROVED LIST FOR WORK ZONE IMPACT ATTENUATORS, FROM THE ROADWAY STANDARDS APPROVED PRODUCTS WEB PAGE.

INSTALLATION SHALL BE AT THE LOCATIONS SPECIFIED IN THE PLANS IN ACCORDANCE WITH THE MANUFACTURER'S SPECIFICATIONS.

THE CONTRACTOR SHALL REPAIR OR REPLACE A DAMAGED UNIT WITHIN 24 HOURS OF A DAMAGING IMPACT.

WHEN BIDIRECTIONAL DESIGNS ARE SPECIFIED, THE CONTRACTOR SHALL SUPPLY APPROPRIATE TRANSITIONS.

WHEN GATING IMPACT ATTENUATORS ARE DESIRED, THE CONTRACTOR SHALL SUBMIT DOCUMENTATION TO THE ENGINEER FOR ACCEPTANCE.

THE COST FOR THE ADDITIONAL BARRIER REQUIRED FOR A GATING IMPACT ATTENUATOR SHALL BE INCLUDED IN THE COST OF THE GATING IMPACT ATTENUATOR.

PAYMENT FOR THE ABOVE WORK SHALL BE MADE AT THE UNIT PRICE BID AND SHALL INCLUDE ALL LABOR, TOOLS, EQUIPMENT AND MATERIALS NECESSARY TO CONSTRUCT AND MAINTAIN A COMPLETE AND FUNCTIONAL IMPACT ATTENUATOR SYSTEM, INCLUDING ALL RELATED BACKUPS, TRANSITIONS, LEVELING PADS, HARDWARE AND GRADING, NOT SEPARATELY SPECIFIED, AS REQUIRED BY THE MANUFACTURER.

ITEM 614 - ASPHALT CONCRETE FOR MAINTAINING TRAFFIC

THIS ITEM SHALL BE USED TO INSTALL AND REMOVE TEMPORARY ASPHALT RAMPS AT BUTT JOINTS, AND DRAINAGE/UTILITY CASTINGS WHERE REQUIRED. MATERIAL SHALL BE REMOVED PRIOR TO THE PLACEMENT OF THE NEXT COURSE OF ASPHALT. THE FOLLOWING ESTIMATED QUANTITY HAS BEEN CARRIED TO THE GENERAL SUMMARY TO ACCOMPLISH THIS ITEM OF WORK.

ITEM 614, ASPHALT CONCRETE FOR MAINTAINING TRAFFIC .....10 CU. YD.

WORK ZONE PAVEMENT MARKINGS

THE WORK ZONE PAVEMENT MARKINGS SHALL BE 6" WIDE, UNLESS NOTED OTHERWISE ON THE PLANS OR ODOT/OTIC STANDARD DRAWING. REMOVAL METHODS LISTED IN SP 614C SHALL ALSO BE USED TO REMOVE ITEM 614 - WORK ZONE PAVEMENT MARKINGS.

PAYMENT WILL BE MADE AT THE UNIT PRICE FOR ITEM 614, WORK ZONE PAVEMENT MARKING OR ITEM SP 614B, WORK ZONE PAVEMENT MARKING AND SHALL INCLUDE ALL LABOR, TOOLS, EQUIPMENT AND MATERIALS NECESSARY TO COMPLETE THE WORK.

ITEM 615 - ROADS FOR MAINTAINING TRAFFIC

ALL COSTS NOT ITEMIZED ELSEWHERE IN THE PLANS ASSOCIATED WITH THE CROSSOVER CONSTRUCTION AND MEDIAN AND SHOULDER RESTORATION INCLUDING, BUT NOT LIMITED TO, ITEMS SHOWN BELOW SHALL BE INCLUDED IN THE LUMP SUM BID ITEM FOR ITEM 615 - ROADS FOR MAINTAINING TRAFFIC.

THE FOLLOWING QUANTITIES RELATED TO ITEM 615 - ROADS FOR MAINTAINING TRAFFIC HAVE BEEN INCLUDED FOR INFORMATION ONLY:

ITEM 202 - CONCRETE BARRIER REMOVED.....1,102 FOOT
ITEM 203 - EXCAVATION.....201 CU. YD.
ITEM 254 - PAVEMENT PLANING, ASPHALT CONCRETE (VARIABLE DEPTH).....8,434 SQ. YD.
ITEM SP 302 - ASPHALT CONCRETE BASE, PG 64-22.....306 CU. YD.
ITEM SP 304 - AGGREGATE BASE.....181 CU. YD.
ITEM SP 304 - GRANULAR EMBANKMENT.....70 CU. YD.
ITEM SP 404 - ASPHALT CONCRETE SURFACE COURSE, USING CRUSHED SLAG, PG 76-22 (FR) .....516 CU. YD.
ITEM SP 404A - JOINT SEALER.....2,204 FOOT
ITEM 407 - NON-TRACKING TACK COAT.....762 GAL.
ITEM SP 611 - 12" CONDUIT, TYPE B, AS PER PLAN .....21 FOOT
ITEM SP 611 - 15" CONDUIT, TYPE B, AS PER PLAN .....43 FOOT
ITEM 611 - SLOTTED DRAIN, TYPE 2, 12" .....576 FOOT
ITEM 611 - SLOTTED DRAIN, TYPE 2, 15" .....552 FOOT
ITEM 611 - INLET ADJUSTED TO GRADE, AS PER PLAN .....1 EACH
ITEM 622 - CONCRETE BARRIER, TYPE B-50, AS PER PLAN.....1,102 FOOT
ITEM SPECIAL - SONIC NAP ALERT PATTERN.....0.54 MILE

ITEM SP 614C - REMOVAL OF PAVEMENT MARKING

ALL PAVEMENT MARKINGS WHICH ARE IN CONFLICT WITH THE PROPOSED MAINTENANCE OF TRAFFIC PAVEMENT MARKINGS ARE TO BE REMOVED AS PER SP 614C - REMOVAL OF PAVEMENT MARKING.

REMOVAL OF EXISTING CONFLICTING PAVEMENT MARKINGS SHALL BE ACCOMPLISHED BY EITHER GRINDING OR WATER BLAST AS APPROVED BY THE CHIEF ENGINEER, IN ACCORDANCE WITH SP 614C.

BLACKOUT TAPE CAN BE USED PER SP 614A AND CMS 614.

MEASUREMENT OF THIS ITEM SHALL BE IN ACCORDANCE WITH SP 614C AND SHALL INCLUDE ALL LABOR, MATERIALS, EQUIPMENT AND INCIDENTALS NECESSARY TO REMOVE CONFLICTING PAVEMENT MARKINGS TO THE SATISFACTION OF THE CHIEF ENGINEER.

ITEM 614 - WORK ZONE CROSSOVER LIGHTING SYSTEM

THIS WORK SHALL CONSIST OF FURNISHING, ERECTING, OPERATING, MAINTAINING AND REMOVING A WORK ZONE LIGHTING SYSTEM FOR A SINGLE CROSSOVER, OR OVERLAPPING A PAIR OF CROSSOVERS. THE SYSTEM SHALL BE AS SHOWN ON SCD MT- 100.00. THE CONTRACTOR SHALL PROVIDE A PLAN, WHICH REFLECTS THE PROPOSED LOCATIONS OF THE POLES, IN RELATION TO THE CLEAR ZONE WHICH SHALL BE SUBMITTED TO THE CHIEF ENGINEER FOR REVIEW AND APPROVAL PRIOR TO INSTALLATION OF THE POLES. THE CONTRACTOR SHALL ARRANGE FOR AND PAY FOR POWER. ALL MATERIALS AND CONSTRUCTION SHALL COMPLY WITH APPLICABLE PORTIONS OF 625 AND 725 EXCEPT: THE PERFORMANCE TEST OF 625.19F, AND CERTIFIED DRAWING REQUIREMENT OF 625.04, ARE WAIVED AND USED MATERIALS IN GOOD CONDITION ARE ACCEPTABLE.

POLES WHICH ARE NOT PROTECTED BY GUARDRAIL OR PORTABLE BARRIER SHALL BE LOCATED OUTSIDE THE CLEAR ZONE, AND SHOULD BE LOCATED AT LEAST 30 FT (PREFERABLY 40 FT) FROM THE EDGE OF PAVEMENT WHEN POSSIBLE. ADDITIONAL POLE LINES, CABLES AND APPURTENANCES NECESSARY TO FURNISH POWER TO THE LIGHTING SYSTEM SHALL BE INCLUDED IN THIS ITEM. SERVICE POLES SHALL BE POSITIONED WITH THE SAME CONSTRAINTS AS THE LIGHTING POLES AS A MINIMUM.

PAYMENT WILL BE MADE AT THE UNIT PRICE PER EACH FOR ITEM 614, WORK ZONE CROSSOVER LIGHTING SYSTEM THROUGHOUT ALL PHASES OF WORK WHEN THE CROSSOVER ROADWAYS ARE USED.

THE FOLLOWING QUANTITY HAS BEEN CARRIED TO THE MAINTENANCE OF TRAFFIC GENERAL SUMMARY:

ITEM 614 - WORK ZONE CROSSOVER LIGHTING SYSTEM..... 2 EACH

ITEM SP 614ZP - ZONE PERSON WITH ZONE VEHICLE

THIS ITEM SHALL CONSIST OF FURNISHING A QUALIFIED ZONE PERSON(S) (ZP) WITH ZONE VEHICLE (ZV) AS DESCRIBED IN SP 614ZP FOR THE PURPOSE OF PROTECTING THE MOTORING PUBLIC AND THE WORK WHILE THE CONTRACT IS IN FORCE. THE ZP SHALL HAVE A FULL WORKING KNOWLEDGE OF THE MAINTENANCE OF TRAFFIC PLANS AND SPECIAL PROVISIONS.

A "WORK ZONE" IS DEFINED AN AREA OF A HIGHWAY WITH CONSTRUCTION, MAINTENANCE, OR UTILITY WORK ACTIVITIES. A WORK ZONE IS TYPICALLY MARKED BY TEMPORARY TRAFFIC CONTROL (TTC) DEVICES SUCH AS, BUT NOT LIMITED TO, SIGNS, CHANNELIZING DEVICES, BARRIERS, PAVEMENT MARKINGS, AND/OR WORK VEHICLES. IT EXTENDS FROM THE FIRST WARNING SIGN TO THE END ROAD WORK SIGN OR THE LAST TTC DEVICE.

THE ZP SHALL SUPERVISE THE SET-UP AND REMOVAL OF THE TTC DEVICES, AS WELL AS THE MAINTENANCE OF THOSE DEVICES WHILE THEY ARE IN PLACE. THE ZP SHALL BE RESPONSIBLE THAT ANY DAMAGED OR MISSING TTC DEVICES ARE REPAIRED OR REPLACED IMMEDIATELY. IN ADDITION, THE ZP SHALL CONTINUALLY CHECK THE REFLECTIVE SURFACES OF ALL THE TTC DEVICES TO ENSURE THAT THE DEVICES ARE CLEAN AND ARE PERFORMING THEIR INTENDED FUNCTION.

1 THE FOLLOWING QUANTITY HAS BEEN CARRIED TO THE GENERAL SUMMARY:

ITEM SP 614ZP - ZONE PERSON WITH ZONE VEHICLE.....28,500 HOURS

ITEM SP 611 - 12" CONDUIT, TYPE B, AS PER PLAN

1 CONSTRUCT 12" CONDUIT , TYPE B PER CMS 707.33, EXCEPT CONSTRUCT PIPE TO CONNECT TO EXISTING STRUCTURE AND ADJUST EXISTING STRUCTURE ACCORDINGLY. REMOVE CONDUIT DURING PHASE 4 AND RETURN EXISTING STRUCTURE TO ORIGINAL CONDITION.

ITEM SP 611 - 15" CONDUIT, TYPE B, AS PER PLAN

1 CONSTRUCT 15" CONDUIT, TYPE B PER CMS 707.33, EXCEPT CONSTRUCT PIPE TO CONNECT TO EXISTING STRUCTURE AND ADJUST EXISTING STRUCTURE ACCORDINGLY. REMOVE CONDUIT DURING PHASE 4 AND RETURN EXISTING STRUCTURE TO ORIGINAL CONDITION.

ITEM 611 - INLET ADJUSTED TO GRADE, AS PER PLAN

1 EXISTING INLET STATION 10+04.44 SHALL BE ADJUSTED TO ACCEPT INCOMING SLOTTED DRAIN PIPE AND COVERED WITH METAL PLATE TO PRESERVE IT DURING ALL MOT PHASES. THE INLET WILL BE ADJUSTED TO GRADE AFTER MOT TO FUNCTION AS NORMAL BEFORE THE ADJUSTMENTS TO PAVEMENT FOR CROSSOVERS.

ITEM 611 - SLOTTED DRAIN, TYPE 2, 12"

1 THIS ITEM CONSISTS OF 12 INCH DIAMETER SLOTTED DRAIN ALUMINUM COATED STEEL CONDUIT 707.01 WITH 6 INCH TRAPEZOIDAL GALVANIZED SOLID BAR GRATE AS APPROVED BY THE ENGINEER. ALL COSTS FOR LABOR AND MATERIALS, INCLUDING TYPE 2 BEDDING AND BACKFILLING AS DETAILED ON STANDARD CONSTRUCTION DRAWING DM-1.3, AND SUBSEQUENT REMOVAL ARE INCLUDED IN THE LUMP SUM PRICE FOR ITEM 615 - ROADS FOR MAINTAINING TRAFFIC.

ITEM 611 - SLOTTED DRAIN, TYPE 2, 15"

1 THIS ITEM CONSISTS OF 15 INCH DIAMETER SLOTTED DRAIN ALUMINUM COATED STEEL CONDUIT 707.01 WITH 6 INCH TRAPEZOIDAL GALVANIZED SOLID BAR GRATE AS APPROVED BY THE ENGINEER. ALL COSTS FOR LABOR AND MATERIALS, INCLUDING TYPE 2 BEDDING AND BACKFILLING AS DETAILED ON STANDARD CONSTRUCTION DRAWING DM-1.3, AND SUBSEQUENT REMOVAL ARE INCLUDED IN THE LUMP SUM PRICE FOR ITEM 615 - ROADS FOR MAINTAINING TRAFFIC.

DELINEATION OF CONCRETE BARRIER

SIDE MOUNTED BARRIER DELINEATORS SHALL BE INSTALLED ON CONCRETE BARRIER ON APPROACH PAVEMENT, APPROACH SLABS AND STRUCTURES AT LOCATIONS NOTED IN THE PLANS.

PAYMENT WILL BE MADE AT THE UNIT PRICE FOR ITEM 614, BARRIER REFLECTORS AND SHALL INCLUDE ALL LABOR, TOOLS, EQUIPMENT AND MATERIALS NECESSARY TO COMPLETE THE WORK.

THE FOLLOWING QUANTITY HAS BEEN CARRIED TO THE MAINTENANCE OF TRAFFIC GENERAL SUMMARY.

ITEM 614 - BARRIER REFLECTOR, TYPE 1, ONE-WAY..... 36 EACH

ITEM 614 - PORTABLE CHANGEABLE MESSAGE SIGN, AS PER PLAN

THE CONTRACTOR SHALL FURNISH, INSTALL, MAINTAIN AND REMOVE, WHEN NO LONGER NEEDED, TWO (2) PORTABLE CHANGEABLE MESSAGE SIGNS (PCMS). THE TWO (2) SIGNS SHALL BE LOCATED NEAR THE PROJECT SITE, ONE FOR EACH DIRECTION OF TRAVEL, FOR THE DURATION OF THE PROJECT. THE INTENT OF THE PCMS IS TO ALERT MOTORISTS OF TRAFFIC QUEUES OR INCIDENTS DURING MAINTENANCE OF TRAFFIC PHASES 2 AND 3. PCMS SHOULD BE PUT IN PLACE APPROXIMATELY A WEEK BEFORE PHASE 2 IS ESTABLISHED AND REMOVED ONCE PHASE 3 IS DISCONTINUED. THE SIGNS SHALL BE OF A TYPE SHOWN ON A LIST OF APPROVED CLASS "A" PCMS UNITS MAINTAINED BY THE ODOT DIRECTOR (OFFICE OF MATERIALS MANAGEMENT). THE APPROVED LIST OF PORTABLE CHANGEABLE MESSAGE SIGNS CAN BE FOUND ON THE ODOT WEBSITE BY CLICKING ON THE SERVICES MENU, THEN CLICKING ON MATERIALS MANAGEMENT.

EACH SIGN SHALL BE TRAILER-MOUNTED AND EQUIPPED WITH A FUNCTIONAL DIMMING MECHANISM, TO DIM THE SIGN DURING DARKNESS, AND A TAMPER AND VANDAL PROOF ENCLOSURE. EACH SIGN SHALL BE PROVIDED WITH APPROPRIATE TRAINING AND OPERATION INSTRUCTIONS TO ENABLE ON-SITE PERSONNEL TO OPERATE AND TROUBLESHOOT THE UNIT. THE SIGN SHALL ALSO BE CAPABLE OF BEING POWERED BY AN ELECTRICAL SERVICE DROP FROM A LOCAL UTILITY COMPANY. PCMS SHALL BE DELINEATED ON A PERMANENT BASIS IN ACCORDANCE WITH ODOT CMS 614.03.

THE PCMS LOCATIONS, LIMITS FOR THOSE LOCATIONS AND ALL ACTIVATION OF PCMS BY THE CONTRACTOR SHALL BE AS DIRECTED BY THE CHIEF ENGINEER. THE PCMS SHALL BE LOCATED IN A HIGHLY VISIBLE POSITION YET PROTECTED FROM TRAFFIC. THE CONTRACTOR SHALL, AT THE DIRECTION OF THE CHIEF ENGINEER, RELOCATE THE PCMS TO IMPROVE VISIBILITY OR ACCOMMODATE CHANGED CONDITIONS. WHEN NOT IN USE, THE PCMS SHALL BE TURNED OFF. ADDITIONALLY, WHEN NOT IN USE FOR EXTENDED PERIODS OF TIME, THE PCMS SHALL BE TURNED, FACING AWAY FROM ALL TRAFFIC, AND SHALL DISPLAY ONE OR MORE TYPE G YELLOW RETROREFLECTIVE SHEETING SURFACES OF 9-INCH BY 15-INCH MINIMUM SIZE FACING TRAFFIC.

THE CHIEF ENGINEER SHALL BE PROVIDED ACCESS TO EACH SIGN UNIT AND SHALL BE PROVIDED WITH APPROPRIATE TRAINING AND OPERATION INSTRUCTIONS TO ENABLE TURNPIKE MAINTENANCE PERSONNEL TO OPERATE AND TROUBLESHOOT THE UNIT, AND TO REVISE SIGN MESSAGES, IF NECESSARY.

ALL MESSAGES TO BE DISPLAYED ON THE SIGN WILL BE PROVIDED BY THE CHIEF ENGINEER. A LIST OF ALL REQUIRED PRE-PROGRAMMED MESSAGES WILL BE GIVEN TO THE CONTRACTOR AT THE PROJECT PRE-CONSTRUCTION CONFERENCE OR EMAILED TO THE CONTRACTOR. THE SIGN SHALL HAVE THE CAPABILITY TO STORE UP TO 99 MESSAGES. MESSAGE MEMORY OR PRE-PROGRAMMED DISPLAYS SHALL NOT BE LOST AS A RESULT OF POWER FAILURES TO THE ON-BOARD COMPUTER. THE SIGN LEGEND SHALL BE CAPABLE OF BEING CHANGED IN THE FIELD. THREE-LINE PRESENTATION FORMATS WITH UP TO SIX MESSAGE PHASES SHALL BE SUPPORTED. PCMS FORMAT SHALL PERMIT THE COMPLETE MESSAGE FOR EACH PHASE TO BE READ AT LEAST TWICE.

THE PCMS SHALL CONTAIN AN ACCURATE CLOCK AND PROGRAMMING LOGIC WHICH WILL ALLOW THE SIGN TO BE ACTIVATED, DEACTIVATED OR MESSAGES CHANGED AUTOMATICALLY AT DIFFERENT TIMES OF THE DAY FOR DIFFERENT DAYS OF THE WEEK.

THE PCMS SHALL CONTAIN A CELLULAR TELEPHONE DATA LINK WHICH WILL ALLOW REMOTE ACCESS BY THE OTIC COMMUNICATIONS CENTER THROUGH A WEB BROWSER OR PROVIDED SOFTWARE. REMOTE ACCESS WILL ALLOW PCMS ACTIVATION, MESSAGE CHANGES, MESSAGE ADDITIONS, REVISIONS TO TIME OF DAY PROGRAMS, VERIFICATION OF CURRENT AND PROGRAMMED MESSAGES AND SHOW ITS CURRENT LOCATION ON A MAP. THE OTIC COMMUNICATIONS CENTER SHALL BE FURNISHED A USER NAME AND PASSWORD TO ACCESS THE PCMS THROUGH THE WEBSITE OR PROVIDED SOFTWARE.

ALL PCMS UNITS SHALL BE EQUIPPED WITH RADAR THAT ENABLES THE MESSAGE BOARD TO DISPLAY THE SPEED OF THE APPROACHING VEHICLES.

ONE-WEEK PRIOR TO THE PCMS BEING DEPLOYED, THE CONTRACTOR SHALL CONTACT THE OTIC COMMUNICATIONS CENTER WITH THE PCMS NUMBER AND LOCATION. AT THAT TIME THE OTIC COMMUNICATIONS WILL VERIFY COMMUNICATION WITH THE PCMS.

WHEN A PCMS IS REPLACED OR RELOCATED THE CONTRACTOR SHALL CONTACT THE OTIC COMMUNICATIONS CENTER WITH THE PCMS NUMBER AND LOCATION.

THE PCMS UNIT SHALL BE MAINTAINED IN GOOD WORKING ORDER BY THE CONTRACTOR IN ACCORDANCE WITH THE PROVISIONS OF ODOT CMS 614.07. THE CONTRACTOR SHALL, PRIOR TO ACTIVATING THE UNIT, MAKE ARRANGEMENTS WITH AN AUTHORIZED SERVICE AGENT FOR THE PCMS, TO ASSURE PROMPT SERVICE IN THE EVENT OF FAILURE. ANY FAILURE SHALL NOT RESULT IN THE SIGN BEING OUT OF SERVICE FOR MORE THAN 12 HOURS, INCLUDING WEEKENDS. FAILURE TO COMPLY MAY RESULT IN AN ORDER TO STOP WORK AND OPEN ALL TRAFFIC LANES AND/OR IN THE CHIEF ENGINEER TAKING APPROPRIATE ACTION TO SAFELY CONTROL TRAFFIC. THE ENTIRE COST TO CONTROL TRAFFIC, ACCRUED BY THE OHIO TURNPIKE AND INFRASTRUCTURE COMMISSION DUE TO THE CONTRACTOR'S NONCOMPLIANCE, WILL BE DEDUCTED FROM MONEYS DUE, OR TO BECOME DUE THE CONTRACTOR ON THEIR CONTRACT.

THE CONTRACTOR SHALL BE RESPONSIBLE FOR 24-HOUR-PER-DAY OPERATION AND MAINTENANCE OF THESE SIGNS ON THE PROJECT FOR THE DURATION OF THE PHASES WHEN THE PLAN REQUIRES THEIR USE.

PAYMENT FOR THE ABOVE-DESCRIBED ITEM SHALL BE AT THE CONTRACT UNIT PRICE. PAYMENT SHALL INCLUDE ALL LABOR, MATERIALS, EQUIPMENT, FUELS, LUBRICATING OILS, SOFTWARE, HARDWARE AND INCIDENTALS TO PERFORM THE ABOVE-DESCRIBED WORK. THE CONTRACTOR SHALL ONLY BE PAID FOR PCMS UNITS WHEN THEY ARE IN OPERATION ON THE PROJECT AS SPECIFIED IN THE PLANS OR BY THE CHIEF ENGINEER.

THE FOLLOWING ESTIMATED QUANTITY HAS BEEN INCLUDED IN THE GENERAL SUMMARY FOR USE AS DIRECTED BY THE CHIEF ENGINEER TO PROVIDE TWO (2) PORTABLE CHANGEABLE MESSAGE SIGNS, EACH SIGN FOR APPROXIMATELY 1,240 DAYS, FOR AN ESTIMATED TOTAL OF 2,480 DAYS.

ITEM 614 - PORTABLE CHANGEABLE MESSAGE SIGN, AS PER PLAN.....2,480 DAYS

1

DESIGN AGENCY
ONE EASTON OVAL
SUITE 400
COLUMBUS, OH 43219
T 614-476-6000
F 614-476-6225
WOOLPERT

NO.	REVISIONS	BY	DATE
1	ADDENDUM 4	MWZ	05/23
-	-	-	-
-	-	-	-

DESIGNED	CHECKED
SDO	JDB
DRAWN	IN CHARGE
VT	MWZ

PROJECT 43-23-04
DATE: 1/17/23

MAINTENANCE OF TRAFFIC GENERAL NOTES
OHIO TURNPIKE OVER TINKERS CREEK
M.P. 185.6
SUMMIT COUNTY

OHIO TURNPIKE AND INFRASTRUCTURE COMMISSION

OHIO TURNPIKE

FinalPlansBind_81533_MN001.dwg; 5/11/23 - 10:32am

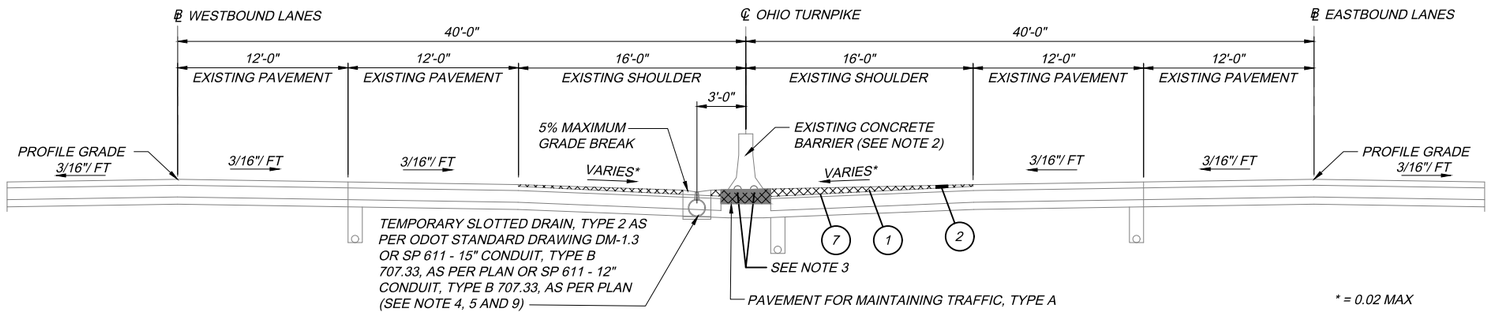

MEDIAN TEMPORARY PAVEMENT AND DRAINAGE SECTION - PHASE 1

STATION 704+00.00 TO STATION 710+82.00
STATION 7+00.00 TO STATION 13+70.00
(SEE NOTE 2 FOR EXISTING MEDIAN BARRIER REMOVAL LIMITS)

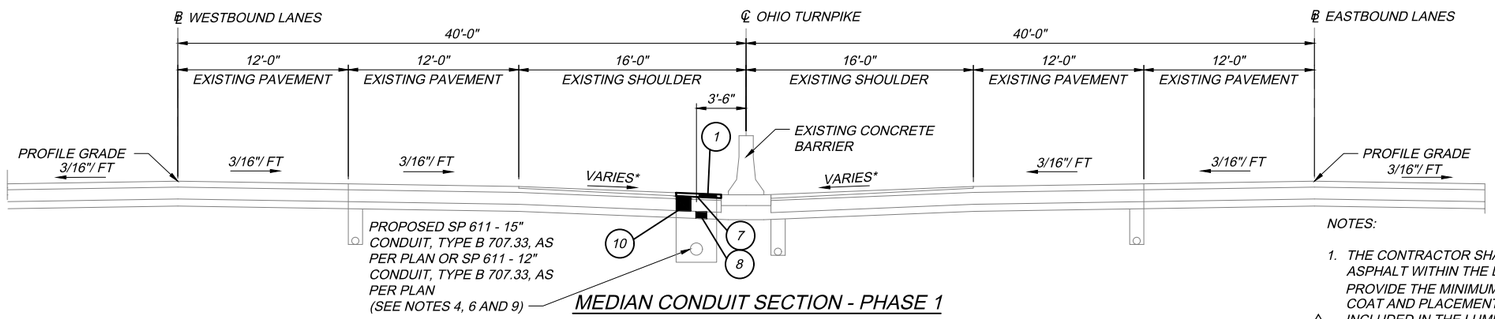

MEDIAN CONDUIT SECTION - PHASE 1

STATION 710+82.00 TO STATION 711+24.45
STATION 6+78.79 TO STATION 7+00.00

LEGEND

= TEMPORARY ASPHALT MINIMUM 1 ½" THICKNESS

1. ITEM SP 404 - ASPHALT CONCRETE SURFACE COURSE, USING CRUSHED SLAG, PG 76-22 (FR) (VARIABLE DEPTH)
2. ITEM 254 - PAVEMENT PLANING, ASPHALT CONCRETE (VARIABLE DEPTH)
3. NOT USED
4. ITEM 622 - CONCRETE BARRIER TYPE B-50, AS PER PLAN
5. ITEM SP 404A - JOINT SEALER (APPLIED TO VERTICAL FACE)
6. ITEM SPECIAL - SAWCUT JOINT
7. ITEM 407 - NON-TRACKING TACK COAT
8. ITEM SP 304 - AGGREGATE BASE (6")
9. ITEM SP 304 - GRANULAR EMBANKMENT (VARIABLE DEPTH)
10. ITEM SP 302 - ASPHALT CONCRETE BASE, PG 64-22 (T = 13.5")
11. ITEM SPECIAL - SONIC NAP ALERT PATTERN

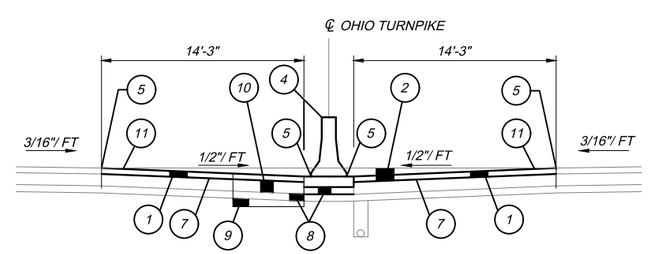

MEDIAN AND SHOULDER RESTORATION TYPICAL SECTION - PHASE 4

STATION 704+00.00 TO STATION 711+24.45
STATION 6+78.79 TO STATION 13+70.00

NOTES:

1. THE CONTRACTOR SHALL REMOVE THE EXISTING SURFACE COURSE OF ASPHALT WITHIN THE LIMITS OF THE TEMPORARY PAVEMENT IN ORDER TO PROVIDE THE MINIMUM 1 ½" PAVEMENT THICKNESS. COST OF REMOVAL, TACK COAT AND PLACEMENT OF VARIABLE DEPTH TEMPORARY PAVEMENT TO BE INCLUDED IN THE LUMP SUM BID FOR ITEM 615, ROADS FOR MAINTAINING TRAFFIC.
2. CONTRACTOR SHALL REMOVE ENTIRE EXISTING PERMANENT MEDIAN BARRIER DURING PHASE 1 DEMOLITION OPERATIONS FROM STATION 705+30 TO STATION 710+82 AND FROM STATION 7+00 TO STATION 12+50. MEDIAN BARRIER FOUNDATION MAY REMAIN DURING CONSTRUCTION AND BE REPLACED DURING THE PHASE 4 CROSSOVER RESTORATION.
3. THE CONTRACTOR SHALL TERMINATE THE MULTICELL CONDUIT BY PERMANENT CAPPING. THE CONTRACTOR SHALL NOT REPLACE THE MULTICELL CONDUIT. LABOR, EQUIPMENT, AND MATERIALS FOR THE ABOVE DESCRIBED WORK SHALL BE INCLUDED IN THE LUMP SUM BID FOR ITEM 615, ROADS FOR MAINTAINING TRAFFIC.
4. SEE SHEETS 16-18 FOR PHASE 1 CONDUIT LIMITS. PLACE FULL DEPTH PAVEMENT IN AREAS WHERE TEMPORARY DRAINAGE FEATURES ARE REMOVED DURING PHASE 4.
5. CONSTRUCT 15" TEMPORARY SLOTTED DRAIN, TYPE 2 FROM STATION 705+30 TO STATION 710+82. CONSTRUCT 12" TEMPORARY SLOTTED DRAIN, TYPE 2 FROM STATION 7+00 TO STATION 9+95 AND FROM STATION 10+04 TO STATION 12+85.
6. (NOT USED)
7. CONTRACTOR SHALL CONSTRUCT ITEM 622 - CONCRETE BARRIER TYPE B-50, AS PER PLAN FROM STATION 705+30 TO STATION 710+82 AND FROM STATION 7+00 TO STATION 12+50 DURING PHASE 4.
8. ALL COSTS ASSOCIATED WITH THE MEDIAN RESTORATION INCLUDING, BUT NOT LIMITED TO, THE REMOVAL OF THE TEMPORARY PAVEMENT, REMOVAL OF ALL THE TEMPORARY DRAINAGE ITEMS, MEDIAN BARRIER REPLACEMENT, PAVEMENT REPLACEMENT, AND PERMANENT DRAINAGE ITEMS, UNLESS ITEMIZED SEPARATELY, SHALL BE INCLUDED IN THE LUMP SUM BID FOR ITEM 615, ROADS FOR MAINTAINING TRAFFIC.
9. USE 12" CONDUIT FROM STATION 6+78.79 TO STATION 7+00.00. USE 15" CONDUIT FROM STATION 710+82.00 TO STATION 711+24.45.

NO.	REVISIONS	BY	DATE
1	ADDENDUM 4	MWZ	05/23
-	-	-	-
-	-	-	-

DESIGNED SDO | CHECKED JDB | DRAWN SDO | IN CHARGE MWZ

DESIGN AGENCY
WOOLPERT
ONE EASTON OVAL
SUITE 400
COLUMBUS, OH 43219
T 614-476-6000
F 614-476-6225

MAINTENANCE OF TRAFFIC TYPICAL SECTIONS
OHIO TURNPIKE OVER TINKERS CREEK
M.P. 185.6
SUMMIT COUNTY

PROJECT 43-23-04
DATE: 1/17/23

OHIO TURNPIKE AND INFRASTRUCTURE COMMISSION

FinalPlansBind_81533_MY001.dwg; 5/11/23 - 11:22am

REF NO.	ITEM NO.	ITEM DESCRIPTION	APPROX. QUANTITY	UNIT	SEE SHEET
		GENERAL (REF. NOS. 1 - 5A)			
1	IB.ART.6	PREMIUM FOR CONTRACT PERFORMANCE BOND AND PAYMENT BOND	1	LUMP	
2	SP 614	MAINTAINING TRAFFIC	1	LUMP	
3	SP 619	FIELD OFFICE	1	LUMP	
4	SP 623	CONSTRUCTION LAYOUT SURVEY	1	LUMP	
5	624	MOBILIZATION	1	LUMP	
1 5A	SPECIAL	TEMPORARY HAUL ROADS	1	LUMP	

REF NO.	ITEM NO.	ITEM DESCRIPTION	APPROX. QUANTITY	UNIT	SEE SHEET
		ROADWAY (REF NOS. 6 - 31)			
6	201	CLEARING AND GRUBBING	1	LUMP	
7	202	PAVEMENT REMOVED	373	SQ. YD.	
8	202	CONCRETE BARRIER REMOVED	82	FOOT	
9	202	CURB REMOVED	60	FOOT	
10	202	GUARDRAIL REMOVED	5,485	FOOT	
11	202	GUARDRAIL REMOVED FOR REUSE	1,100	FOOT	
12	202	BRIDGE TERMINAL ASSEMBLY REMOVED	4	EACH	
13	202	FENCE REMOVED	118	FOOT	
14	202	REMOVAL MISC.: FIBER OPTIC	1	LUMP	
15	203	EXCAVATION	8,822	CU. YD.	
16	203	EMBANKMENT	1,071	CU. YD.	
1 17		NOT USED			
18	204	SUBGRADE COMPACTION	6,439	SQ. YD.	
19	204	EXCAVATION OF SUBGRADE	68	CU. YD.	1
20	204	PROOF ROLLING	3	HOUR	
21	606	GUARDRAIL, TYPE MGS WITH LONG POSTS	5,463	FOOT	
22	606	GUARDRAIL REBUILT, TYPE MGS WITH LONG POSTS	1,100	FOOT	
23	606	ANCHOR ASSEMBLY, TYPE T	1	EACH	
24	606	MGS BRIDGE TERMINAL ASSEMBLY, TYPE 1	2	EACH	
25	606	MGS BRIDGE TERMINAL ASSEMBLY, TYPE 2	2	EACH	
26	SP 607	TYPE II FENCE, ALL ALUMINUM (4'-0" CHAIN LINK WITH SPECIALS) 1	118	FOOT	
27	609	CURB, TYPE 4-C	101	FOOT	
28	SP 621	RAISED PAVEMENT MARKER	182	EACH	
29	622	CONCRETE BARRIER, TYPE B-50, AS PER PLAN	326	FOOT	5
30	SP 626	BARRIER REFLECTOR, TYPE 1 (BI-DIRECTIONAL)	5	EACH	
31	SP 626	BARRIER REFLECTOR, TYPE 2 (ONE WAY)	58	EACH	

REF NO.	ITEM NO.	ITEM DESCRIPTION	APPROX. QUANTITY	UNIT	SEE SHEET
		EROSION CONTROL (REF. NOS. 32 - 42, 39A)			
32	659	SOIL ANALYSIS TEST	2	EACH	
33	659	TOPSOIL	231	CU. YD.	
34	659	SEEDING AND MULCHING	2,080	SQ. YD.	
35	659	REPAIR SEEDING AND MULCHING	104	SQ. YD.	
36	659	INTER-SEEDING	104	SQ. YD.	
37	659	COMMERCIAL FERTILIZER	0.29	TON	
38	659	LIME	0.43	ACRE	
39	659	WATER	12	M. GAL.	
39A	661	DECIDUOUS TREE, 2" CALIPER (NATIVE SPECIES)	20	EACH	1
40	SP 113	SWP3 MANAGEMENT	1	LUMP	
41	832	STORM WATER POLLUTION PREVENTION PLAN	1	LUMP	
42	832	EROSION CONTROL	30,000	EACH	

REF NO.	ITEM NO.	ITEM DESCRIPTION	APPROX. QUANTITY	UNIT	SEE SHEET
		DRAINAGE (REF. NOS. 43 - 59)			
43	202	HEADWALL REMOVED	2	EACH	
44	202	PIPE REMOVED, 24" AND UNDER	98	FOOT	
45	202	CATCH BASIN REMOVED	3	EACH	
46	601	CRUSHED AGGREGATE SLOPE PROTECTION WITH GEOTEXTILE FABRIC	3	CU. YD.	
47	601	TIED CONCRETE BLOCK MAT, TYPE 2	34	SQ. YD.	
48	601	ROCK CHANNEL PROTECTION, TYPE C WITH GEOTEXTILE FABRIC	23	CU. YD.	
49	602	CONCRETE MASONRY	15.0	CY	
50	SP 605	6" SHALLOW PIPE UNDERDRAINS, WITH FABRIC WRAP (30")	1,545	FOOT	
51	SP 605	6" UNCLASSIFIED PIPE UNDERDRAINS, WITH FABRIC WRAP (30")	61	FOOT	
52	SP 605	6" BASE PIPE UNDERDRAINS, WITH FABRIC WRAP (18")	638	FOOT	
53	SP 605	6" UNDERDRAIN OUTLET PIPE	280	FOOT	
54	SP 611	12" CONDUIT, TYPE B	189	FOOT	
55	SP 611	18" CONDUIT, TYPE B	41	FOOT	
56	SP 611	18" CONDUIT, TYPE B, AS PER PLAN	79	FOOT	5
57	SP 611	INLET, NO I-3B50, DOUBLE GRATE	3	EACH	
58	SP 611	CATCH BASIN, MEDIAN WALL	2	EACH	
59	611	CATCH BASIN ADJUSTED TO GRADE	1	EACH	

REF NO.	ITEM NO.	ITEM DESCRIPTION	APPROX. QUANTITY	UNIT	SEE SHEET
		PAVEMENT (REF. NOS. 60 - 73)			
60	254	PAVEMENT PLANING, ASPHALT CONCRETE	47,140	SQ. YD.	
61	SP 302	ASPHALT CONCRETE BASE, PG 64-22	1,357	CU. YD.	
62	SP 304	AGGREGATE BASE	1,386	CU. YD.	
63	SP 304	AGGREGATE BASE, (VARIABLE DEPTH)	68	CU. YD.	
64	SP 402	ASPHALT CONCRETE INTERMEDIATE COURSE, PG 76-22 (FR)	2,509	CU. YD.	
65	SP 402	ASPHALT CONCRETE INTERMEDIATE COURSE, PG 76-22 (FR), (VARIABLE DEPTH)	320	CU. YD.	
66	SP 404	ASPHALT CONCRETE SURFACE COURSE, USING CRUSHED SLAG, PG 76-22 (FR)	1,793	CU. YD.	
67	SP 404	ASPHALT CONCRETE SURFACE COURSE, USING CRUSHED SLAG, PG 76-22 (FR), (VARIABLE DEPTH)	17	CU. YD.	
68	407	NON-TRACKING TACK COAT	7,546	GAL.	
69	SPECIAL	SONIC NAP ALERT PATTERN	2.78	MILE	
70	617	SHOULDER PREPARATION	749	SQ. YD.	
71	617	COMPACTED AGGREGATE USING SP 304	63	CU. YD.	
72	617	WATER	10	M. GAL.	
73	SP 627	STONE SHOULDER PROTECTION	63	CU. YD.	

REF NO.	ITEM NO.	ITEM DESCRIPTION	APPROX. QUANTITY	UNIT	SEE SHEET
		TRAFFIC CONTROL (REF. NOS. 74 - 78)			
74	630	SIGN ERECTED, FLAT SHEET, AS PER PLAN	2	EACH	73
75	630	REMOVAL OF GROUND MOUNTED SIGN AND DISPOSAL	2	EACH	
76	642	EDGE LINE, 6", TYPE 1	3.26	MILE	
77	642	LANE LINE, 6", TYPE 1	3.26	MILE	
78	642	PAVEMENT MARKING, MISC.: FINAL PAVEMENT MARKING PREPARATION	0.90	MILE	

DESIGN AGENCY
WOOLPERT
ONE EASTON OVAL
SUITE 400
COLUMBUS, OH 43219
T 614-476-6000
F 614-476-6225

NO.	REVISIONS	BY	DATE
1	ADDENDUM 4	MWZ	05/23
-	-	-	-
-	-	-	-
-	-	-	-

DESIGNED MWZ | CHECKED JDB | DESIGNED MWZ | IN CHARGE MWZ | DRAWN VT

GENERAL SUMMARY
OHIO TURNPIKE OVER TINKERS CREEK
SUMMIT COUNTY
M.P. 185.6

PROJECT 43-23-04
DATE: 1/17/23

OHIO TURNPIKE AND INFRASTRUCTURE COMMISSION

FinalPlansBind_81533_GG001.dwg; 5/10/23 - 12:28am

REF NO.	ITEM NO.	ITEM DESCRIPTION	APPROX. QUANTITY	UNIT	SEE SHEET
		STRUCTURES (REF. NOS. 79 - 131)			
79	SP 202	PORTIONS OF STRUCTURE REMOVED, OVER 20 FOOT SPAN, AS PER PLAN	1	LUMP	76
80	203	SPECIAL - SETTLEMENT PLATFORMS	8	EACH	76
81	503	COFFERDAMS AND EXCAVATION BRACING, AS PER PLAN	1	LUMP	77
82	503	UNCLASSIFIED EXCAVATION, AS PER PLAN	1	LUMP	77
83	505	PILE DRIVING AND EQUIPMENT MOBILIZATION	1	LUMP	
84	507	14" CAST-IN-PLACE REINFORCED CONCRETE PILES, DRIVEN	20,880	FOOT	
85	507	14" CAST-IN-PLACE REINFORCED CONCRETE PILES, FURNISHED	21,780	FOOT	
86	507	16" CAST-IN-PLACE REINFORCED CONCRETE PILES, DRIVEN	18,180	FOOT	
87	507	16" CAST-IN-PLACE REINFORCED CONCRETE PILES, FURNISHED	18,930	FOOT	
88	SP 509	EPOXY COATED REINFORCING STEEL, GRADE 60	1,693,724	POUND	
89	511	CLASS QC1 CONCRETE WITH QC/QA, ABUTMENT INCLUDING FOOTING	298	CU. YD.	
90	511	CLASS QC1 CONCRETE WITH QC/QA, PIER CAPS AND COLUMNS	445	CU. YD.	
91	511	CLASS QC1 CONCRETE WITH QC/QA, PIER FOOTINGS	757	CU. YD.	
92	511	SEMI-INTEGRAL DIAPHRAGM GUIDE	4	EACH	
93	511	CLASS QC2 CONCRETE WITH QC/QA, BRIDGE DECK	2,953	CU. YD.	
94		NOT USED			
95	SP 511B	CLASS S CONCRETE, BARRIERS AND PARAPETS, USING TYPE 1 CEMENT, AS PER PLAN	217	CU. YD.	77
96	512	TYPE 2 WATERPROOFING	5	SQ. YD.	
97	515	DRAPED STRAND PRESTRESSED CONCRETE BRIDGE I-BEAM MEMBER, LEVEL 3, TYPE WF54-49	72	EACH	
98	515	INTERMEDIATE DIAPHRAGMS	180	EACH	
99	516	SEMI-INTEGRAL ABUTMENT EXPANSION JOINT SEAL	304	FOOT	
100	516	ELASTOMERIC BEARING WITH INTERNAL LAMINATES AND LOAD PLATE (NEOPRENE), 16" x 18"	120	EACH	
101	516	ELASTOMERIC BEARING WITH INTERNAL LAMINATES AND LOAD PLATE (NEOPRENE), 16" x 20"	24	EACH	
102	516	1" PREFORMED EXPANSION JOINT FILLER	122	SQ. FT.	
103	516	2" PREFORMED EXPANSION JOINT FILLER	1,269	SQ. FT.	
104	516	ARMORLESS PREFORMED JOINT SEAL, AS PER PLAN	255	FOOT	77
105	517	RAILING, MISC.: COMBINATION PARAPET AND MOMENT SLAB ON MSE WALL	491	FOOT	77
106	518	POROUS BACKFILL WITH GEOTEXTILE FABRIC	34	CU. YD.	
107	518	SCUPPER, MISC: EXISTING DECK CORING	8	EACH	77
108	519	SPECIAL - PATCHING CONCRETE BRIDGE DECK	344	SQ. YD.	77
109	523	DYNAMIC LOAD TESTING	4	EACH	
110	526	REINFORCED CONCRETE APPROACH SLAB (T=17")	846	SQ. YD.	
111	526	TYPE C INSTALLATION	255	FOOT	
112	SP 527	FALSEWORK, TEMPORARY BRACING AND PROTECTIVE STRUCTURES	1	LUMP	
113	530	SPECIAL - MOBILIZATION/DEMOBILIZATION	1	LUMP	77
114	530	SPECIAL - PREPRODUCTION TEST PROGRAM	1	LUMP	77
115	530	SPECIAL - PRODUCTION DMM WORKS	1	LUMP	77
116	530	SPECIAL - QC/QA PROGRAM	1	LUMP	77
117	530	SPECIAL - INSTRUMENTATION	1	LUMP	77
118	SP 536	CONCRETE WEATHERPROOFING, DECK, ABUTMENT SLABS, AND APPROACH SLABS	9,231	SQ. YD.	77
119	SP 536	CONCRETE WEATHERPROOFING, SUBSTRUCTURE	755	SQ. YD.	77
120	601	ROCK CHANNEL PROTECTION, TYPE C WITH FILTER	148	CU .YD.	
120A	601	CONCRETE SLOPE PROTECTION	57	SQ. YD.	
121	622	CONCRETE BARRIER, TYPE B-50, AS PER PLAN	1,433	FOOT	112
122	690	SPECIAL - ENVIRONMENTAL, WATER MONITORING	1	LUMP	77
123	840	MECHANICALLY STABILIZED EARTH WALL	8,782	SQ. FT.	
124	840	FOUNDATION PREPARATION	4,662	SQ. YD.	
125	840	SELECT GRANULAR BACKFILL	29,243	CU .YD.	
126	840	6" DRAINAGE PIPE, PERFORATED	900	FOOT	
127	840	6" DRAINAGE PIPE, NONPERFORATED	42	FOOT	
128	840	CONCRETE COPING	909	FOOT	
129	840	ON-SITE ASSISTANCE	10	DAYS	
130	840	SGB INSPECTION AND COMPACTION TESTING	1	LUMP	
131	867	TEMPORARY WIRE FACED MECHANICALLY STABILIZED EARTH WALL	1	LUMP	

REF NO.	ITEM NO.	ITEM DESCRIPTION	APPROX. QUANTITY	UNIT	SEE SHEET
		MAINTENANCE OF TRAFFIC (REF. NOS. 132 - 154)			
132	614	REPLACEMENT SIGN	5	EACH	6
133	614	ASPHALT CONCRETE FOR MAINTAINING TRAFFIC	10	CU. YD.	7
134	614	WORK ZONE CROSSOVER LIGHTING SYSTEM	2	EACH	7
135	SP 614ZP	ZONE PERSON WITH ZONE VEHICLE	28,500	HOUR	7
136	614	PORTABLE CHANGEABLE MESSAGE SIGN, AS PER PLAN	2,480	DAYS	7
137	614	BARRIER REFLECTOR, TYPE 1, ONE-WAY	36	EACH	7
138	614	WORK ZONE IMPACT ATTENUATOR, 24" WIDE HAZARDS, (UNIDIRECTIONAL)	6	EACH	
139	614	WORK ZONE LANE LINE, CLASS I, 6"	1.07	MILE	
140	614	WORK ZONE EDGE LINE, CLASS I, 6"	5.01	MILE	
141	614	WORK ZONE CHANNELIZING LINE, CLASS I, 12"	4,499	FOOT	
142	SP 614B	WORK ZONE LANE LINE, CLASS I, 6"	1.09	MILE	
143	SP 614B	WORK ZONE EDGE LINE, CLASS I, 6"	5.63	MILE	
144	SP 614B	WORK ZONE CHANNELIZING LINE, CLASS I, 12"	5,050	FOOT	
145	SP 614C	REMOVAL OF PAVEMENT MARKING	5.42	MILE	
146	615	ROADS FOR MAINTAINING TRAFFIC	1	LUMP	7
147	615	PAVEMENT FOR MAINTAINING TRAFFIC, CLASS A	429	SQ. YD.	
148	621	REPLACEMENT PRISMATIC RETRO-REFLECTOR	101	EACH	6
149		NOT USED			
150	SP 622	PORTABLE BARRIER (WITHOUT GLARE SCREEN)	9,015	FOOT	6
151	SP 622	PORTABLE BARRIER (WITH GLARE SCREEN)	6,140	FOOT	6
152	SP 626	CONSTRUCTION ZONE MARKERS, ONE WAY MODEL, WHITE	1,492	EACH	
153	SP 626	CONSTRUCTION ZONE MARKERS, ONE WAY MODEL, YELLOW	746	EACH	
154	630	SIGNING MISC.: ADDITIONAL SIGNS, GROUND MOUNTED, AS DIRECTED BY ENGINEER	16	SQ. FT.	6

DESIGN AGENCY
WOOLPERT
ONE EASTON OVAL
SUITE 400
COLUMBUS, OH 43219
T 614-476-6000
F 614-476-6225

NO.	REVISIONS	BY	DATE
1	ADDENDUM 4	MWZ	05/23
-	-	-	-
-	-	-	-

DESIGNED MWZ | CHECKED JDB | DRAWN VT | IN CHARGE MWZ

GENERAL SUMMARY
OHIO TURNPIKE OVER TINKERS CREEK
SUMMIT COUNTY
M.P. 185.6

PROJECT 43-23-04
DATE: 1/17/23

OHIO TURNPIKE AND INFRASTRUCTURE COMMISSION

FinalPlansBind_81533_GG001.dwg: 5/11/23 - 10:53am

REF NO.	SHEET NO.	STATION TO STATION	202 PAVEMENT REMOVED	202 CONCRETE BARRIER REMOVED	202 CURB REMOVED	202 GUARDRAIL REMOVED	202 GUARDRAIL REMOVED FOR REUSE	202 BRIDGE TERMINAL ASSEMBLY REMOVED	202 FENCE REMOVED	202 REMOVAL MISC.: FIBER OPTIC	606 GUARDRAIL, TYPE MGS WITH LONG POSTS	606 GUARDRAIL REBUILT, TYPE MGS WITH LONG POSTS	606 ANCHOR ASSEMBLY, TYPE T	606 MGS BRIDGE TERMINAL ASSEMBLY, TYPE 1	606 MGS BRIDGE TERMINAL ASSEMBLY, TYPE 2	SP 607 TYPE II FENCE, ALL ALUMINUM (4'-0" CHAIN LINK WITH SPECIALS)	609 CURB, TYPE 4-C	SP 621 RAISED PAVEMENT MARKER	622 CONCRETE BARRIER, TYPE B-50, AS PER PLAN	SP 626 BARRIER REFLECTOR, TYPE 1 (BI-DIRECTIONAL)	SP 626 BARRIER REFLECTOR, TYPE 2 (ONE WAY)	630 SIGN ERECTED, FLAT SHEET, AS PER PLAN	630 REMOVAL OF GROUND MOUNTED SIGN AND DISPOSAL	642 EDGE LINE, 6", TYPE 1, WHITE	642 EDGE LINE, 6", TYPE 1, YELLOW	642 LANE LINE, 6", TYPE 1
			SQ. YD.	FOOT	FOOT	FOOT	FOOT	EACH	FOOT	LUMP	FOOT	FOOT	EACH	EACH	EACH	FOOT	FOOT	EACH	FOOT	EACH	EACH	EACH	EACH	MILE	MILE	MILE
R5	57	712+50.00 TO 712+73.50 C	328																								
R6	57	712+58.07 TO 712+90.43 LT			33																						
R7	57	712+60.00 TO 712+86.76 RT			27																						
R8	57	709+71.90 TO 712+90.43 LT				319																					
R9	57	711+53.21 TO 712+86.76 RT				134																					
R10	57	712+90.43 LT						1																			
R11	57	712+86.76 RT						1																			
R14	57	712+83.96 TO 713+03.09 RT							41																		
R15	57	712+99.29 TO 713+03.54 LT							26																		
R16	57	711+92.00 TO 712+73.50 C		82																							
GR1	57	709+65.00 TO 713+04.50 LT									337.5		1		1						4						
GR2	57	711+53.10 TO 713+05.00 RT									125			1							2						
B1	57	711+92.00 TO 713+28.75 C																	97	2							
C1	57	712+61.57 TO 713+02.50 LT															41										
C2	57	712+61.57 TO 713+02.50 RT															41										
RD1	57	712+99.29 TO 713+02.50 LT														26											
RD2	57	712+83.96 TO 713+02.50 RT														41											
R12	61	1+38.07 TO 12+95.00 RT				1,157		1																			
	61	12+95.00 TO 14+64.59 RT					175																				
	61	16+50.03 TO 20+20.00 RT					375																				
	61	20+20.00 TO 33+80.00 RT				1,360																					
R13	61	1+40.92 TO 12+95.00 LT				1,155		1																			
	61	12+95.00 TO 14+52.56 LT					162.5																				
	61	16+37.47 TO 20+20.00 LT					387.5																				
	61	20+20.00 TO 33+80.00 LT				1,360																					
R17	61	0+73.00 TO 0+86.00 LT/RT								1																	
R18	61	1+24.35 TO 1+24.66 LT							17																		
R19	61	1+24.67 TO 1+25.95 RT							34																		
GR3	61	1+22.42 TO 12+95.00 LT									1,150			1							12						
	61	12+95.00 TO 14+64.59 LT										175															
	61	16+50.03 TO 20+20.00 LT										375															
	61	20+20.00 TO 33+80.00 LT									1,337.5										14						
GR4	61	1+22.92 TO 12+95.00 RT									1,175				1						12						
	61	12+95.00 TO 14+52.56 RT										162.5															
	61	16+37.47 TO 20+20.00 RT										387.5															
	61	20+20.00 TO 33+80.00 RT									1,337.5										14						
B2	61	720+45.25 TO 1+54.00 C																	229	3							
C3	61	1+24.92 TO 1+43.06 LT															19										
RD3	61	1+24.35 TO 1+24.66 LT														17											
RD4	61	1+24.67 TO 1+25.95 RT														34											
EW1	73	709+10.00 TO 14+50.21 LT																						0.51			
	73	16+31.25 TO 33+80.00 LT																						0.33			
LL1	73	709+10.00 TO 14+52.79 LT																25									0.51
	73	16+33.61 TO 33+80.00 LT																22									0.33
LL2	73	709+10.00 TO 14+55.58 LT																25									0.51
	73	16+36.20 TO 33+80.00 LT																22									0.33
EY1	73	709+10.00 TO 14+58.25 LT																							0.51		
	73	16+38.68 TO 33+80.00 LT																							0.33		
EY2	73	711+50.00 TO 14+64.83 RT																							0.46		
	73	16+44.62 TO 33+80.00 RT																							0.33		
LL3	73	711+50.00 TO 14+67.29 RT																22									0.47
	73	16+47.11 TO 33+80.00 RT																22									0.33
LL4	73	711+50.00 TO 14+69.75 RT																22									0.47
	73	16+49.61 TO 33+80.00 RT																22									0.33
EW2	73	711+50.00 TO 14+72.13 RT																						0.47			
	73	16+52.15 TO 33+80.00 RT																						0.33			
S1	73	713+02.50 RT																				1	1				
S2	73	1+24.92 LT																				1	1				
TOTALS CARRIED TO GENERAL SUMMARY			328	82	60	5,485	1,100	4	118	1	5,463	1,100	1	2	2	118	101	182	326	5	58	2	2	3.26		3.26

DESIGN AGENCY
WOOLPERT
ONE EASTON OVAL
SUITE 400
COLUMBUS, OH 43219
T 614-476-6000
F 614-476-6225

NO.	REVISIONS	BY	DATE
1	ADDENDUM 4	MWZ	05/23
-	-	-	-
-	-	-	-
-	-	-	-

CHECKED JDB
IN CHARGE MWZ
DESIGNED MWZ
DRAWN VT

ROADWAY SUBSUMMARY
OHIO TURNPIKE OVER TINKERS CREEK
SUMMIT COUNTY
M.P. 185.6

PROJECT 43-23-04
DATE: 1/17/23

OHIO TURNPIKE AND INFRASTRUCTURE COMMISSION

OHIO TURNPIKE

FinalPlansBlnd_81533_GS002.dwg; 5/11/23 - 10:32am

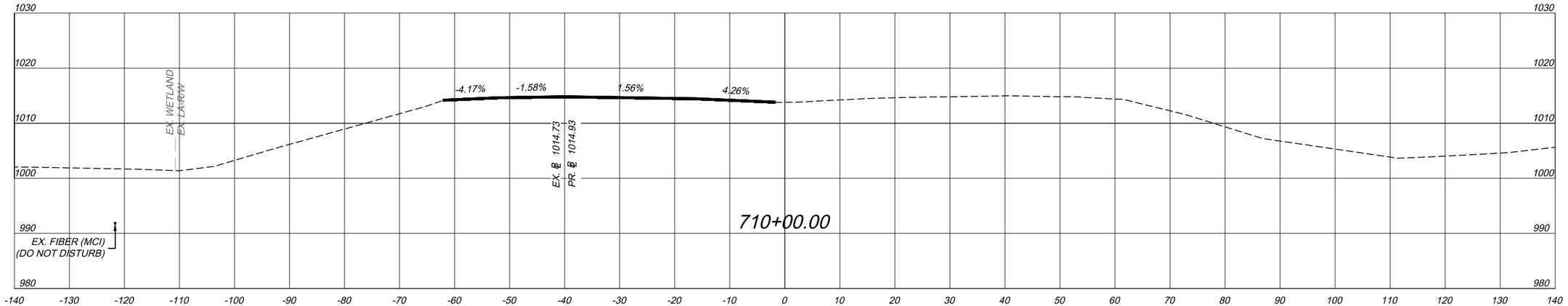

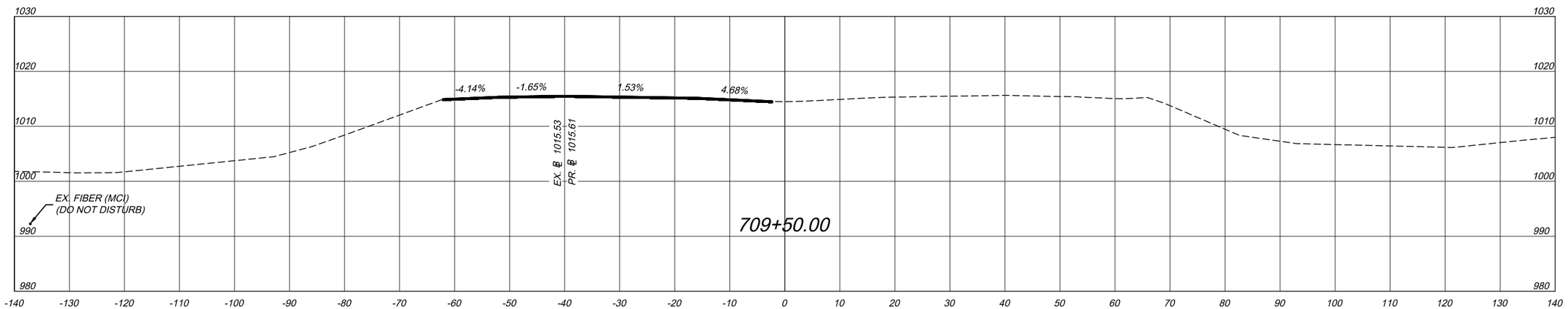

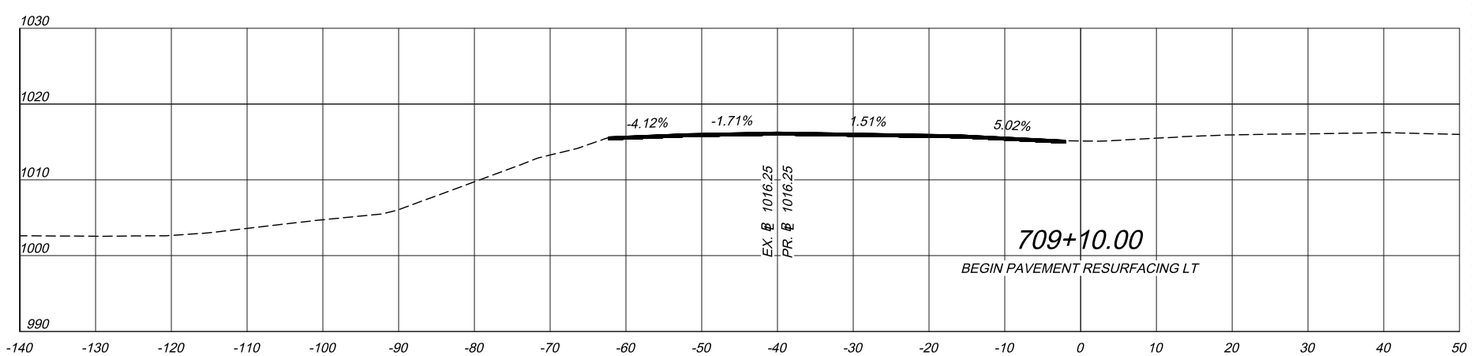

STATION	EARTHWORK SUMMARY TABLE				
	END AREA (SQ. FT.)		VOLUME (CU. YD.)		VOLUME (CU. YD.)
	CUT	FILL	203 - EXCAVATION	203 - EMBANKMENT	840 - SELECT GRANULAR BACKFILL
712+50.00	71	107			
			68	103	-
712+76.00	71	107			
			148	214	910
713+00.00	262	374			
			-	-	3,748
713+50.00	-	-			
			-	-	845
713+65.00	-	-			
BRIDGE					
720+06.00	-	-			
			-	-	3,488
720+50.00	-	-			
			-	-	4,824
721+00.00	-	-			
			-	-	4,023
721+40.00 = 0+00.00	-	-			
			-	-	4,551
+50.00	-	-			
			-	-	4,032
1+00.00	-	-			
			-	-	1,870
1+25.00	92	114			
			85	106	952
1+50.00	92	114			
			14	17	-
1+54.00	92	114			
TOTALS			315	440	29,243

1

NO.	REVISIONS	BY	DATE
1	ADDENDUM 4	MWZ	05/23
-	-	-	-
-	-	-	-

DESIGNED	CHECKED
MWZ	JDB
DRAWN	IN CHARGE
MWZ	MWZ

DESIGN AGENCY
WOOLPERT
ONE EASTON OVAL
SUITE 400
COLUMBUS, OH 43219
T 614-476-6000
F 614-476-6225

OHIO TURNPIKE

OHIO TURNPIKE AND INFRASTRUCTURE COMMISSION

CROSS SECTIONS - STA 709+10 TO 710+00
OHIO TURNPIKE OVER TINKERS CREEK
SUMMIT COUNTY
M.P. 185.6

PROJECT 43-23-04
DATE: 1/17/23

OHIO TURNPIKE

FinalPlansBind_81533_XS001.dwg: 5/09/23 - 4:27pm

PROPOSED WORK

THE OHIO TURNPIKE BRIDGE OVER TINKERS CREEK SHALL BE RECONSTRUCTED UNDER THIS CONTRACT. MAJOR WORK INCLUDES COMPLETE REMOVAL AND REPLACEMENT OF THE EXISTING BRIDGE WITH A NEW MULTI-SPAN COMPOSITE PRESTRESSED CONCRETE BEAM BRIDGE WITH CONTINUOUS REINFORCED CONCRETE DECK, SEMI-INTEGRAL ABUTMENTS, CAP-AND-COLUMN PIERS ON PILES. ADDITIONAL WORK INCLUDES PERFORMING CONCRETE WEATHERPROOFING AND MAINTENANCE OF TRAFFIC. DETAILS OF THIS WORK ARE SHOWN IN THE PLANS.

DESIGN SPECIFICATIONS

THE STRUCTURE CONFORMS TO "STANDARD SPECIFICATIONS FOR HIGHWAY BRIDGES" ADOPTED BY THE AMERICAN ASSOCIATION OF STATE HIGHWAY AND TRANSPORTATION OFFICIALS, 17TH EDITION, DATED 2002, THE 2004 ODOT BRIDGE DESIGN MANUAL, INCLUDING INTERIMS, AND ODOT CONSTRUCTION AND MATERIAL SPECIFICATIONS.

THE CLASS OF CONCRETE AND THE GRADES OF STEEL FOR THE CONSTRUCTION ARE AS FOLLOWS:

CONCRETE CLASS S - COMPRESSIVE STRENGTH 4,500 PSI (PARAPETS)
CONCRETE CLASS QC2 - COMPRESSIVE STRENGTH 4,500 PSI (SUPERSTRUCTURE)
CONCRETE CLASS QC1 - COMPRESSIVE STRENGTH 4,000 PSI (SUBSTRUCTURES)
CONCRETE FOR PRESTRESSED BEAMS:
COMPRESSIVE STRENGTH (FINAL) 8,500 PSI
COMPRESSIVE STRENGTH (RELEASE) 7,000 PSI

PRESTRESSING STRANDS - ASTM A416
ULTIMATE STRENGTH = 270 KSI
A_S = 0.217 SQ. IN.
INITIAL STRESS = 202.5 KSI (LOW RELAXATION STRANDS)
MODULUS OF ELASTICITY = 28,500 KSI

REINFORCING STEEL - ASTM A615 OR A996 - GRADE 60
WELDED WIRE FABRIC - YIELD STRENGTH 70 KSI
STRUCTURAL STEEL - ASTM A709 GRADE 50

DESIGN LOADING

HS20-44 AND THE ALTERNATE MILITARY LOADING

DECK PROTECTION METHOD

EPOXY COATED REINFORCING STEEL
2-½" CONCRETE COVER

MONOLITHIC WEARING SURFACE

MONOLITHIC WEARING SURFACE IS ASSUMED, FOR DESIGN PURPOSES, TO BE 1" THICK

EXISTING STRUCTURE VERIFICATION

DETAILS, DIMENSIONS, AND ELEVATIONS SHOWN ON THESE PLANS PERTAINING TO THE EXISTING STRUCTURE HAVE BEEN OBTAINED FROM PLANS OF THE EXISTING STRUCTURE AND/OR FROM FIELD OBSERVATIONS AND MEASUREMENTS. CONSEQUENTLY, THEY ARE INDICATIVE OF THE EXISTING STRUCTURE AND THE PROPOSED WORK BUT THEY SHALL BE CONSIDERED TENTATIVE AND APPROXIMATE. THE CONTRACTOR IS REFERRED TO ODOT CMS 501.02 AND OTIC INSTRUCTION TO BIDDERS ARTICLE 2.1 AND GENERAL CONDITIONS ARTICLE 1.5.

CONTRACT BID PRICES SHALL BE BASED UPON A RECOGNITION OF THE UNCERTAINTIES DESCRIBED ABOVE AND UPON A PREBID EXAMINATION OF THE EXISTING STRUCTURE BY THE CONTRACTOR. HOWEVER, ALL PROJECT WORK SHALL BE BASED UPON ACTUAL DETAILS, DIMENSIONS, ELEVATIONS, AND SKEW ANGLES WHICH HAVE BEEN FIELD VERIFIED BY THE CONTRACTOR.

CONSTRUCTION JOINTS

CONSTRUCTION JOINT SURFACES SHALL BE FREE FROM OIL, LAITANCE, FORM RELEASE AGENT, OR ANY OTHER MATERIAL THAT WOULD PREVENT BONDING TO THE CONCRETE SURFACE. ALL LAITANCE AND OTHER CONTAMINANTS SHALL BE REMOVED BY HIGH PRESSURE WATER BLASTING WITH A MINIMUM PRESSURE OF 5,000 P.S.I. HOWEVER, WATER BLASTING SHALL NOT BE REQUIRED WHERE EXISTING CONCRETE HAS BEEN ROUGHENED BY JACKHAMMERS DURING CONCRETE REMOVAL OPERATIONS. SURFACES SHALL BE THOROUGHLY DRENCHED WITH CLEAN WATER AND ALLOWED TO DRY TO A DAMP CONDITION FREE OF STANDING WATER BEFORE PLACING CONCRETE. PREPARATION OF CONSTRUCTION JOINT SURFACES SHALL NOT BE MEASURED FOR PAYMENT. THE COST THEREOF SHALL BE INCLUDED IN THE CONTRACT PRICE OF THE PERTINENT CONCRETE ITEMS.

DECK PLACEMENT DESIGN ASSUMPTIONS:

THE FOLLOWING ASSUMPTIONS OF CONSTRUCTION MEANS AND METHODS WERE MADE FOR THE ANALYSIS AND DESIGN OF THE SUPERSTRUCTURE. THE CONTRACTOR IS RESPONSIBLE FOR THE DESIGN OF THE FALSEWORK SUPPORT SYSTEM WITHIN THESE PARAMETERS AND WILL ASSUME RESPONSIBILITY FOR SUPERSTRUCTURE ANALYSIS FOR DEVIATION FROM THESE DESIGN ASSUMPTIONS. CENTERLINE OF SCREED RAIL IS ASSUMED TO BE 2½" OUTSIDE EDGE OF DECK PER OHIO DEPARTMENT OF TRANSPORTATION BRIDGE DESIGN MANUAL FIGURE 309-23.

AN EIGHT WHEEL FINISHING MACHINE WITH A MAXIMUM WHEEL LOAD OF 2.53 KIPS.

A MINIMUM OUT-TO-OUT WHEEL SPACING AT EACH END OF THE MACHINE OF 103".

A MAXIMUM SPACING OF OVERHANG FALSEWORK BRACKETS OF 48 IN.

A MAXIMUM DISTANCE FROM THE CENTERLINE OF THE FASCIA GIRDER TO THE FACE OF THE SAFETY HANDRAIL OF 65".

PILE DESIGN LOADS (ULTIMATE BEARING VALUE):

THE ULTIMATE BEARING VALUE IS 313 KIPS PER PILE FOR THE REAR ABUTMENT PILES.
THE ULTIMATE BEARING VALUE IS 321 KIPS PER PILE FOR THE PIER 1-3 PILES.
THE ULTIMATE BEARING VALUE IS 320 KIPS PER PILE FOR THE PIER 4-5 PILES.
THE ULTIMATE BEARING VALUE IS 313 KIPS PER PILE FOR THE FORWARD ABUTMENT PILES.

REAR ABUTMENT PILES:
14-INCH DIAMETER CAST-IN-PLACE REINFORCED CONCRETE PILES, 105 FEET LONG, ORDER LENGTH 1 DYNAMIC LOAD TESTING ITEM

PIERS 1-3 PILES:
14-INCH DIAMETER CAST-IN-PLACE REINFORCED CONCRETE PILES, 125 FEET LONG, ORDER LENGTH 1 DYNAMIC LOAD TESTING ITEM

PIERS 4-5 PILES:
16-INCH DIAMETER CAST-IN-PLACE REINFORCED CONCRETE PILES, 125 FEET LONG, ORDER LENGTH 1 DYNAMIC LOAD TESTING ITEM

FORWARD ABUTMENT PILES:
16-INCH DIAMETER CAST-IN-PLACE REINFORCED CONCRETE PILES, 130 FEET LONG, ORDER LENGTH 1 DYNAMIC LOAD TESTING ITEM

PILE DRIVING CONSTRAINTS :

PRIOR TO DRIVING ABUTMENT PILES TO THE ULTIMATE BEARING VALUE, PLACE SHEET PILES, PERFORM ITEM 530 GROUND IMPROVEMENTS, AND CONSTRUCT THE MSE WALL AND THE BRIDGE APPROACH EMBANKMENT BEHIND THE ABUTMENT UP TO THE BOTTOM OF THE FOOTING FOR THE FULL EXTENT OF MECHANICALLY STABILIZED EARTH INSTALLATION FOR A GIVEN PHASE. THE CONTRACTOR MAY PRE-DRIVE ABUTMENT PILES BEFORE CONSTRUCTING MSE WALLS. PRE-DRIVING CONSISTS OF INSTALLING THE ABUTMENT PILES INTO THE SOIL ONLY AS FAR AS NECESSARY SO THAT THE PILE WILL REMAIN VERTICAL DURING MSE WALL CONSTRUCTION. IF PRE-DRIVING PILES, INSTALL PILE SLEEVES AROUND PILES BEFORE CONSTRUCTING THE MSE WALL. AT LEAST THREE FEET OF PILE MUST EXTEND ABOVE THE TOP OF THE PILE SLEEVE TO MEET THE REQUIREMENTS OF CMS 507.09 REGARDING SPLICES. DO NOT DRIVE ABUTMENT PILES TO THE ULTIMATE BEARING VALUE UNTIL AFTER THE ABOVE REQUIRED MSE WALL AND EMBANKMENT HAVE BEEN CONSTRUCTED AND A MINIMUM 30 CALENDAR DAY WAITING PERIOD HAS ELAPSED. THE ENGINEER MAY ADJUST THE LENGTH OF THE WAITING PERIOD BASED ON SETTLEMENT PLATFORM READINGS. AFTER THE SPECIFIED WAITING PERIOD HAS ELAPSED AND SETTLEMENT HAS ATTENUATED TO LESS THAN 0.01 FEET PER WEEK, DRIVE ABUTMENT PILES TO THE ULTIMATE BEARING VALUE. IN ORDER TO REMOVE ANY NEGATIVE SKIN FRICTION THAT HAS DEVELOPED DURING THE WAITING PERIOD, DRIVE EACH ABUTMENT PILE A DISTANCE OF AT LEAST 0.5 INCH. IF NOT PRE-DRIVING ABUTMENT PILES, INSTALL THE ABUTMENT PILES THROUGH PILE SLEEVES AFTER THE ABOVE REQUIRED MSE WALL AND EMBANKMENT HAVE BEEN CONSTRUCTED AND THE SPECIFIED WAITING PERIOD HAS ELAPSED.

THE MAXIMUM DRIVING STRESS SHALL BE LIMITED TO 90 PERCENT OF THE STEEL YIELD STRESS. SELECT A HAMMER CAPABLE OF ACHIEVING THE REQUIRED ULTIMATE BEARING VALUES WITHOUT DAMAGING THE PILES.

ALL PILES SHALL HAVE A MINIMUM NOMINAL WALL THICKNESS OF ½ INCH. CONTRACTOR TO COORDINATE PLACEMENT OF PROPOSED PILES TO AVOID CONFLICTS WITH EXISTING PILING OR NEW GROUND IMPROVEMENTS. NOTIFY ENGINEER IF ANY CONFLICTS ARE FOUND.

MSE RETAINING WALL DATA (ACCREDITED SUPPLIER):

THE PROPRIETARY WALL SUPPLIER SHALL DESIGN THE INTERNAL STABILITY OF A MECHANICALLY STABILIZED EARTH (MSE) WALL IN ACCORDANCE WITH SS840 TO SUPPORT THE ABUTMENT. THE DESIGN FOR INTERNAL STABILITY SHALL INCLUDE AN UNFACTORED HORIZONTAL STRIP LOAD FROM THE SUPERSTRUCTURE OF 2.2 K/FT APPLIED PERPENDICULAR TO THE FACE OF WALL AT THE BASE OF THE CONCRETE FOOTING. THIS STRIP LOAD DOES NOT INCLUDE EARTH PRESSURE LOADS FROM THE ABUTMENT BACKFILL. HOWEVER, THE PROPRIETARY WALL SUPPLIER SHALL INCLUDE EARTH PRESSURE LOADS FROM THE ABUTMENT BACKFILL IN THE DESIGN CALCULATIONS.

AT THE PHASE CONSTRUCTION JOINT LINE THE PROPRIETARY WALL SUPPLIER SHALL DESIGN THE WIRE FACE IN ACCORDANCE WITH SS867.

QUANTITY OF GEOGRID TYPE P5 OR BETTER = 65,320 SQUARE YARDS (FOR INFORMATION ONLY).

WALL FACING PANELS ARE TO HAVE A STANDARD SMOOTH FINISH. PLACEMENT OF LAST PANEL SHALL NOT OCCUR UNTIL SETTLEMENT ATTENUATES.

SP 202, PORTIONS OF STRUCTURE REMOVED, AS PER PLAN:

THIS WORK CONSISTS OF THE REMOVAL OF THE EXISTING SUPERSTRUCTURE IN ITS ENTIRETY, INCLUDING WEARING SURFACE, ABUTMENT SLABS AND APPROACH SLABS, AND THE ABANDONED FIBER OPTIC LINE ATTACHED TO THE WESTBOUND BRIDGE.

REMOVE EXISTING REAR ABUTMENT AND PILES TO ELEVATION 996.00.

REMOVE EXISTING PIERS AND PIER PILES TO 1 FOOT BELOW EXISTING GROUND, EXCEPT AT EXISTING PIER 3. REMOVE EXISTING PIER 3 AND PIER 3 PILES TO ELEVATION 999.14 TO REMAIN ABOVE ORDINARY HIGH WATER MARK ELEVATION. REMOVAL EQUIPMENT SHALL REMAIN OUTSIDE OF TINKERS CREEK AND ABOVE THE ORDINARY HIGH WATER MARK ELEVATION.

REMOVE EXISTING FORWARD ABUTMENT AND PILES TO ELEVATION 1010.80.

PAYMENT WILL BE MADE AT THE CONTRACT LUMP SUM PRICE FOR SP ITEM 202, PORTIONS OF STRUCTURE REMOVED, AS PER PLAN.

1

ITEM 203 SPECIAL - SETTLEMENT PLATFORMS:

SETTLEMENT MONITORING PLATES SHALL BE PLACED AFTER SUBSURFACE IMPROVEMENTS AND SUBGRADES ARE COMPACTED WITH A DRAINAGE LAYER. NO PLATES SHALL BE PLACED OVER OR WITHIN 15 FEET OF PREVIOUS SUBSTRUCTURES. SETTLEMENT MONITORING PLATES SHALL BE PLACED AT THE FOLLOWING LOCATIONS:

STATION	OFFSET	SEGMENT FOR ACCEPTANCE
713+50.00	20.00' RIGHT	STA. 713+00.00 TO STA. 713+70.00
720+50.00	30.00' RIGHT	STA. 720+02.00 TO STA. 721+00.00
721+40.00	15.00' RIGHT	STA. 721+00.00 TO STA. 0+50.00
0+75.00	30.00' RIGHT	STA. 0+50.00 TO STA. 1+25.00
713+50.00	20.00' LEFT	STA. 713+00.00 TO 713+70.00
720+50.00	15.00' LEFT	STA. 720+02.00 TO STA. 721+00.00
721+40.00	30.00' LEFT	STA. 721+00.00 TO STA. 0+50.00
0+75.00	30.00' LEFT	STA. 0+50.00 TO STA. 1+25.00

DO NOT DRIVE PILING UNTIL CONSOLIDATION DUE TO FILL PLACEMENT IS COMPLETED, DEFINED AS A SETTLEMENT ATTENUATION OF 0.01 FEET PER WEEK OR LESS, SUSTAINED FOR AT LEAST ONE WEEK AT THE NEAREST SETTLEMENT PLATFORM TO THE PILING.

CRITERIA OF ACCEPTANCE FOR A SEGMENT IS THE SETTLEMENT ATTENUATION OF 0.01 FEET PER WEEK OR LESS, SUSTAINED FOR AT LEAST ONE WEEK AT THE RELEVANT SETTLEMENT PLATFORM AS DEFINED ABOVE. THE STATION SEGMENTS MAY BE ACCEPTED INDIVIDUALLY . THE ESTIMATED TIMEFRAME FOR ACHIEVING THIS ATTENUATION IS 30 CALENDAR DAYS, BUT WILL BE SUBJECT TO PROPER PLACEMENT AND COMPACTION OF MATERIALS. REFER TO THE GEOTECHNICAL REPORT FOR MORE INFORMATION.

SUBMIT PROPOSED LOCATIONS, SIZES, AND MONITORING METHODS OF SETTLEMENT PLATES OR PLATFORMS FOR APPROVAL PRIOR TO CONSTRUCTION.

PAYMENT SHALL BE MADE AT THE CONTRACT UNIT PRICE EACH FOR "ITEM SPECIAL – SETTLEMENT PLATFORMS" WHICH IS COMPENSATION FOR CONSTRUCTING MAINTAINING, AND MONITORING THE SETTLEMENT PLATFORMS INCLUDING FURNISHING ALL LABOR, EQUIPMENT, MATERIALS, AND INCIDENTALS NECESSARY TO COMPLETE THE WORK. PAYMENT SHALL NOT BE MADE FOR SETTLEMENT PLATFORMS WHICH BECOME USELESS DUE TO DAMAGE CAUSED BY THE CONTRACTOR'S OPERATIONS.

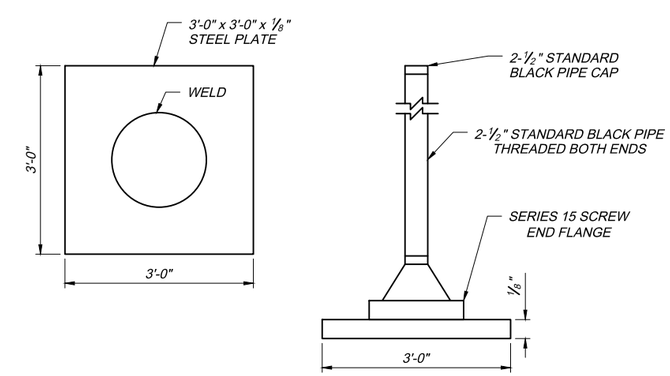

NOT TO SCALE

1. SETTLEMENT PLATFORMS SHALL BE PLACED AT THE LOCATIONS LISTED ABOVE, UNLESS OTHERWISE DIRECTED BY THE ENGINEER.
2. CONTRACTOR SHALL FURNISH MATERIALS AND LABOR TO EXTEND PIPE UP THROUGH ENTIRE FILL.
3. SETTLEMENT PLATFORMS SHALL BE ANCHORED BY STAKES DRIVEN AT EACH CORNER TO PREVENT OVERTURNING.

DESIGN AGENCY
WOOLPERT
ONE EASTON OVAL
SUITE 400
COLUMBUS, OH 43219
T 614-476-6000
F 614-476-6225

NO.	REVISIONS	BY	DATE
1	ADDENDUM 4	PES	05/23
-	-	-	-
-	-	-	-

DESIGNED	CHECKED	DRAWN	IN CHARGE
PES	TML	PES	TML

GENERAL NOTES
OHIO TURNPIKE OVER TINKERS CREEK
SUMMIT COUNTY
M.P. 185.6

PROJECT 43-23-04
DATE: 1/17/23

OHIO TURNPIKE AND INFRASTRUCTURE COMMISSION

FinalPlansBind_81533_SN001.dwg: 5/09/23 - 4:27pm

ITEM 503 - COFFERDAMS AND EXCAVATION BRACING, AS PER PLAN:

THE CONTRACTOR WILL BE PAID FOR THE TEMPORARY SUPPORT OF EXCAVATION AT THE CONTRACT LUMP SUM PRICE FOR COFFERDAMS AND EXCAVATION BRACING. NO ADDITIONAL PAYMENT WILL BE MADE FOR PROVIDING AN ALTERNATE DESIGN.

STEEL SHEET PILE SIZE SHOWN IS ONE POSSIBLE SOLUTION. THE INTENT OF THE SHEET PILE WALL IS EFFLUENT CONTROL DURING DEEP MIXING METHOD OPERATIONS. OTHER TYPES AND SIZES OF SHEET PILE INCLUDING STEEL, ALUMINUM, VINYL, FIBER REINFORCED POLYMER (FRP), AND POLYVINYL CHLORIDE (PVC) MAY BE USED AS AN ALTERNATE PROVIDED THEY ACHIEVE THE REQUIRED EFFLUENT CONTROL AND SUBSURFACE MATERIAL STABILITY REQUIRED TO PROPERLY PERFORM THE SOIL IMPROVEMENT WORK. IT IS THE CONTRACTOR'S RESPONSIBILITY TO PROVIDE A SAFE AND STABLE WORKING ENVIRONMENT AND TO DETERMINE DRIVE-ABILITY AND APPLICATION OF ANY SHEET PILE SOLUTION. SUBMIT PROPOSED SOLUTION FOR APPROVAL PRIOR TO CONSTRUCTION. SHEET PILE MAY BE REMOVED UPON COMPLETION OF THE WORK.

ITEM 503, UNCLASSIFIED EXCAVATION, AS PER PLAN:

UNCLASSIFIED EXCAVATION AT THE ABUTMENTS WILL BE MEASURED WITHIN THE LIMITS SHOWN ON SHEETS 9-10/46. AT THE PIERS, THE UNCLASSIFIED EXCAVATION SHALL BE MEASURED IN ACCORDANCE WITH C&MS 503.09.

SP 511B, CLASS S CONCRETE, BARRIER AND PARAPETS, USING TYPE 1 CEMENT, AS PER PLAN:

PLACE THE PARAPET CONCRETE WITH TEMPORARY DRAINAGE WINDOWS AS SHOWN, SPACED NOT TO EXCEED 30 FEET ON CENTER ALONG THE LENGTH OF THE SBR-1-13 PARAPET. MAINTAIN THE WINDOWS FOR THE DURATION OF THE CONSTRUCTION PHASING AND CROSSOVER MAINTENANCE OF TRAFFIC. THE CONTRACTOR SHALL BE RESPONSIBLE FOR MAINTAINING CLEAN OPENINGS FREE FROM DEBRIS. UPON COMPLETION OF THE REMAINING BRIDGE WORK FILL THE DRAINAGE WINDOWS WITH TYPE 2 MORTAR PER C&MS 705.21. PAYMENT FOR THE CONSTRUCTION, MAINTENANCE, AND FILLING OF THE DRAINAGE WINDOWS SHALL BE INCIDENTAL TO SP 511B: CLASS S CONCRETE, BARRIER AND PARAPETS, USING TYPE 1 CEMENT, AS PER PLAN.

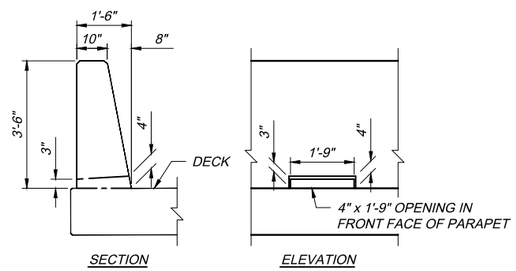

PARAPET DRAINAGE DETAILS
(REINFORCING NOT SHOWN)

ITEM 516 - ARMORLESS PREFORMED JOINT SEAL, AS PER PLAN

INSTALL THE ARMORLESS PREFORMED JOINT SEAL IN ACCORDANCE WITH THE MANUFACTURER'S SPECIFICATIONS AND UNDER THE SUPERVISION OF THE MANUFACTURER'S DESIGNATED REPRESENTATIVE.

SELECT THE ARMORLESS PREFORMED JOINT SEAL FROM ONE OF THE MANUFACTURER'S LISTED BELOW:

R.J. WATSON, INC.
11035 WALDEN AVE.
ALDEN, NY 14004-9616
PHONE: (716) 901-7020
FAX: (716) 901-7015
- SILICOFLEX SF500 (MAX. MOVEMENT RATING: 5")

WATSON BOWMAN ACME CORP.
95 PINEVIEW DRIVE
AMHERST, NY 14228-2121
PHONE: (716) 691-7566
FAX: (716) 691-9239
- WABO SPS-500 (MAX. MOVEMENT RATING: 5")

D.S. BROWN COMPANY
300 EAST CHERRY STREET
NORTH BALTIMORE, OH 45872-1227
PHONE: (419) 257-3561
FAX: (419) 257-2200
- V-500 (MAX. MOVEMENT RATING: 5")

THE SEAL AND ADHESIVE ARE AN INTEGRAL JOINT SYSTEM THAT SHALL BE DESIGNED AND SUPPLIED BY THE SAME MANUFACTURER.

REFER TO STANDARD DRAWING AS-2-15 FOR ADDITIONAL NOTES, DETAILS, AND REQUIREMENTS.

ITEM 519 SPECIAL - PATCHING CONCRETE BRIDGE DECK:

1 A CONTINGENCY QUANTITY HAS BEEN INCLUDED FOR PATCHING OF THE EXISTING EASTBOUND SUPERSTRUCTURE. PAYMENT FOR ALL LABOR, EQUIPMENT, MATERIALS, TESTING, MAINTENANCE OF TRAFFIC (INCLUDING LANE CLOSURES), AND REPORTING TO ACCOMPLISH THIS WORK SHALL BE PAID FOR UNDER ITEM 519 SPECIAL - PATCHING CONCRETE BRIDGE DECK.

ITEM 517 - RAILING, MISC.: COMBINATION PARAPET AND MOMENT SLAB ON MSE WALL:

CONSTRUCT THE MOMENT SLABS AND PARAPETS ON THE MOMENT SLABS AS SHOWN IN THE PLANS. THE WORK WILL BE MEASURED ON A PER FOOT LENGTH BASIS AND SHALL INCLUDE THE MOMENT SLABS, PARAPETS, EXPANSION AND CONTRACTION JOINTS, AND REINFORCING STEEL. PAYMENT SHALL BE MADE AT THE PER FOOT UNIT BID PRICE FOR ITEM 517 - RAILING, MISC.: COMBINATION PARAPET AND MOMENT SLAB ON MSE WALL, AND SHALL INCLUDE ALL LABOR, EQUIPMENT, AND MATERIALS NECESSARY TO COMPLETE THE WORK.

PRECAST CONCRETE MOMENT SLABS ARE ALLOWED AS AN ALTERNATIVE TO CAST-IN-PLACE MOMENT SLABS. SUBMIT SHOP DRAWINGS AND DESIGN CALCULATIONS FOR APPROVAL FOR ANY ALTERNATIVES AT LEAST 30 DAYS PRIOR TO CONSTRUCTION. NO ADDITIONAL PAYMENT SHALL BE MADE FOR ENGINEERING OR ALTERNATE DESIGNS.

ITEM 518 - SCUPPER, MISC.: EXISTING DECK CORING

CORE 4-INCH DIAMETER HOLES IN THE EXISTING DECK TO PROVIDE DRAINAGE DURING MAINTENANCE OF CONSTRUCTION OPERATIONS. PLACE THE HOLES AS CLOSE TO THE PARAPETS AS POSSIBLE WHILE MAINTAINING AT LEAST 3-INCHES OF CLEARANCE FROM THE EXISTING BEAM FLANGES TO THE NEAREST EDGE OF CORE HOLE. ALL CORE HOLES SHALL RESIDE WITHIN THE SHOULDERS IN THE EXISTING AND MAINTENANCE OF TRAFFIC SETUP CONDITIONS.

PLACE CORE HOLES AT THE FOLLOWING STATIONS:
OHIO TURNPIKE EASTBOUND:

STATION 713+50, RIGHT	STATION 715+00, RIGHT
STATION 713+75, RIGHT	STATION 715+50, RIGHT
STATION 714+00, RIGHT	STATION 716+00, RIGHT
STATION 714+25, RIGHT	STATION 719+00, RIGHT

THE CONTRACTOR SHALL BE RESPONSIBLE FOR MAINTAINING CLEAN OPENINGS FREE FROM DEBRIS. THIS WORK SHALL BE MEASURED ON AN EACH BASIS AND SHALL BE INCLUSIVE OF ALL LABOR, EQUIPMENT, AND MATERIALS TO COMPLETE THE WORK. PAYMENT SHALL BE MADE ON AN EACH BASIS FOR ITEM 518 - SCUPPER, MISC.: EXISTING DECK CORING.

ITEM 530 SPECIAL - STRUCTURES, GROUND IMPROVEMENTS (SEE SPECIAL PROVISIONS)

THE CONTRACTOR SHALL FURNISH ALL LABOR, EQUIPMENT, AND MATERIALS NECESSARY TO PLAN, AND CONSTRUCT THE GROUND IMPROVEMENT TO SUPPORT THE PROPOSED ROADWAY EMBANKMENT AND PAVEMENT. THESE METHODS SHALL BE DESIGNED AND INTENDED FOR USE IN PEAT SOIL.THE WORK SHALL INCLUDE THE GROUND IMPROVEMENT METHOD AND ASSOCIATED TESTING, MONITORING, SAMPLING, AND RECORDING TO MEET THE PERFORMANCE REQUIREMENTS OUTLINED IN THESE PLANS, SPECIFICATIONS, AND STRUCTURE FOUNDATION EXPLORATION REPORT.

CONTRACTOR TO COORDINATE PLACEMENT OF SOIL IMPROVEMENTS TO AVOID CONFLICTS WITH PILING. IF A CONFLICT OCCURS, PREDRILL THROUGH THE MIXED ZONE PRIOR TO PLACING THE PILE AND PLACE LOW STRENGTH MORTAR AFTER DRIVING AT NO ADDITIONAL COST TO THE PROJECT.

MEASUREMENT AND PAYMENT.
PAYMENT SHALL INCLUDE FULL COMPENSATION FOR MATERIAL, TOOLS, EQUIPMENT, LABOR, AND ACCESS TO COMPLETE THE GROUND IMPROVEMENTS AS INDICATED IN THE SPECIFICATION FOR ITEM SPECIAL 530 STRUCTURES, GROUND IMPROVEMENTS. THE ACCEPTED QUANTITIES FOR THE COMPLETED WORK AS DESCRIBED WILL BE PAID FOR USING THE FOLLOWING CONTRACT ITEMS (PAY ITEMS).

ITEM	UNIT	DESCRIPTION
530 SPECIAL - STRUCTURES	LUMP	MOBILIZATION / DEMOBILIZATION
530 SPECIAL - STRUCTURES	LUMP	PRODUCTION DMM WORKS
530 SPECIAL - STRUCTURES	LUMP	QC/QA PROGRAM
530 SPECIAL - STRUCTURES	LUMP	PREPRODUCTION TEST PROGRAM
530 SPECIAL - STRUCTURES	LUMP	INSTRUMENTATION

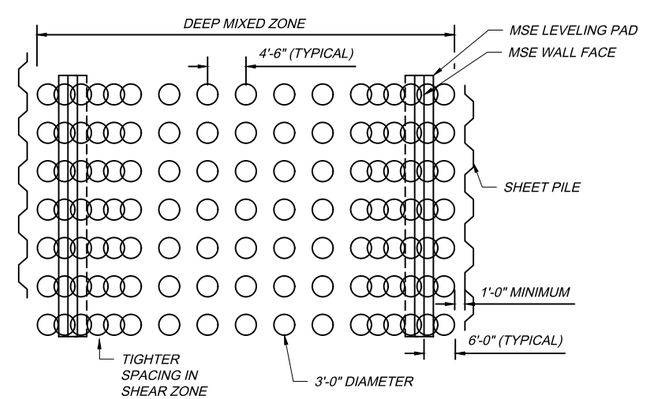

SP 536 CONCRETE WEATHERPROOFING

ITEM SP 536 - CONCRETE WEATHERPROOFING, SHALL BE APPLIED TO THE FOLLOWING EXPOSED CONCRETE SURFACES OF THE BRIDGE:

ALL EXPOSED CONCRETE SURFACES OF ALL ABUTMENTS AND PIERS.
TOP OF DECK AND APPROACH SLABS WITHIN THE BRIDGE LIMITS.

CARE SHALL BE TAKEN NOT TO APPLY WEATHERPROOFING ON CONSTRUCTION JOINT SURFACES, SURFACES TO RECEIVE JOINT SEALER, OR FASCIA BEAM PAINT.

MEASUREMENT AND PAYMENT.
PAYMENT SHALL INCLUDE FULL COMPENSATION FOR MATERIAL, TOOLS, EQUIPMENT, LABOR, AND ACCESS TO COMPLETE CONCRETE WEATHERPROOFING. THE ACCEPTED QUANTITIES FOR THE COMPLETED WORK AS DESCRIBED WILL BE PAID FOR USING THE FOLLOWING CONTRACT ITEMS (PAY ITEMS).

ITEM	UNIT	DESCRIPTION
SP 536	SQ YD	CONCRETE WEATHERPROOFING, SUBSTRUCTURE
SP 536	SQ YD	CONCRETE WEATHERPROOFING, DECK, ABUTMENT SLABS, AND APPROACH SLABS

ITEM 690 SPECIAL - ENVIRONMENTAL, WATER MONITORING

PROVIDE SOIL IMPROVEMENT PER ITEM 530. DURING SOIL IMPROVEMENT OPERATIONS THERE IS A RISK OF EFFLUENT BEYOND THE PLANNED IMPACT ZONE BOUNDED BY THE SHEET PILES SHOWN IN THE PLANS. TO MITIGATE THIS RISK, PROVIDE CONTINUOUS WATER MONITORING WITHIN 10 FEET OUTSIDE THE SHEET PILE CUTOFF WALLS ADJACENT TO THE ACTIVE WORK AND NOT EXCEEDING 100 LINEAR FEET IN SPACING PARALLEL TO THE SHEET PILE. THE CONTINUOUS WATER MONITORING SHALL BE PERFORMED IN ACCORDANCE WITH EPA METHOD 150.2, TO CONSIST OF A WATER pH MONITOR/SENSOR PLACED IN A PLASTIC TUBE SUNK TO GROUNDWATER DEPTH. WHEN PERFORMING SOIL IMPROVEMENT WORK AT THE REAR ABUTMENT PROVIDE MONITORING IN TINKERS CREEK. PROVIDE INITIAL MONITORING FOR ONE WEEK PRIOR TO BEGINNING SOIL IMPROVEMENT WORK IN ORDER TO ESTABLISH BASELINE CONDITIONS

IF WATER pH EXCEEDS 9.0 CEASE OPERATIONS UNTIL pH VALUE RETURNS TO THE BACKGROUND LEVELS. AFTER INITIAL CURING OF THE ADJACENT SOIL IMPROVEMENTS THE MONITORING MAY BE REMOVED.

PROVIDE TEST REPORTS THAT INCLUDE THE WATER MONITORING DATA FOR EACH LOCATION FOR RECORD.

PAYMENT FOR ALL LABOR, EQUIPMENT, MATERIALS, TESTING, AND REPORTING TO ACCOMPLISH THE MONITORING WORK SHALL BE PAID FOR UNDER ITEM 690 SPECIAL - ENVIRONMENTAL, WATER MONITORING.

1 ITEM SPECIAL - TEMPORARY HAUL ROADS

PLACE TEMPORARY HAUL ROADS, MATTING, OR OTHER TEMPORARY ITEMS TO PROVIDE ACCESS TO THE SITE FOR EQUIPMENT AND MATERIALS. REMOVE TEMPORARY MATERIALS UPON COMPLETION. PAYMENT FOR ALL LABOR, EQUIPMENT, AND MATERIALS REQUIRED FOR THIS WORK SHALL BE PAID FOR AT THE CONTRACT LUMP SUM PRICE FOR ITEM SPECIAL - TEMPORARY HAUL ROADS .

VALUE ENGINEERING NOTE

VALUE ENGINEERING MAY BE CONSIDERED BY OTIC AS PART OF THE AWARDED CONTRACT.

DESIGN AGENCY
WOOLPERT
ONE EASTON OVAL
SUITE 400
COLUMBUS, OH 43219
T 614-476-6000
F 614-476-6225

REVISIONS	NO.	BY	DATE
ADDENDUM 4	1	PES	05/23
-	-	-	-
-	-	-	-

DESIGNED	CHECKED
PES	TML
DRAWN	IN CHARGE
PES	TML

GENERAL NOTES
OHIO TURNPIKE OVER TINKERS CREEK
SUMMIT COUNTY
M.P. 185.6

PROJECT 43-23-04
DATE: 1/17/23

OHIO TURNPIKE AND INFRASTRUCTURE COMMISSION

FinalPlansBind_81533_SN001.dwg; 5/11/23 - 10:11am

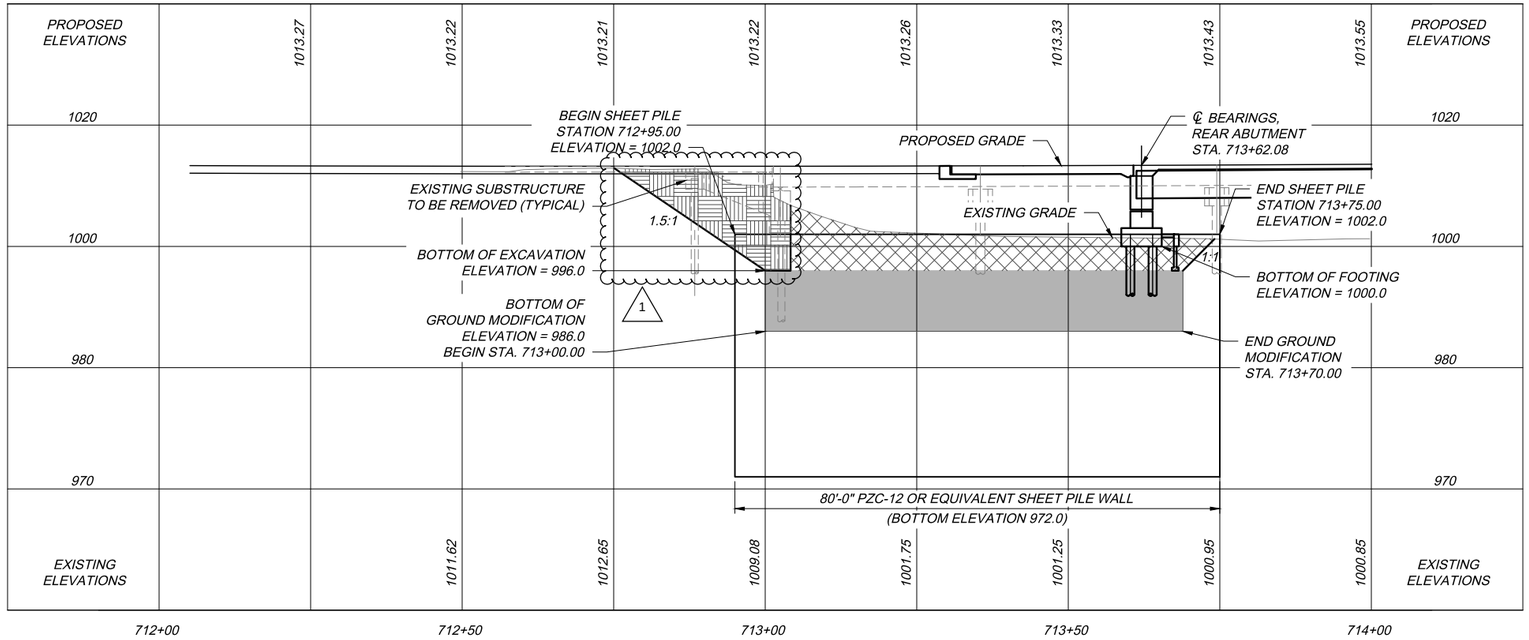

REAR EMBANKMENT ELEVATION

(MSE WALL NOT SHOWN FOR CLARITY)
1" = 25'

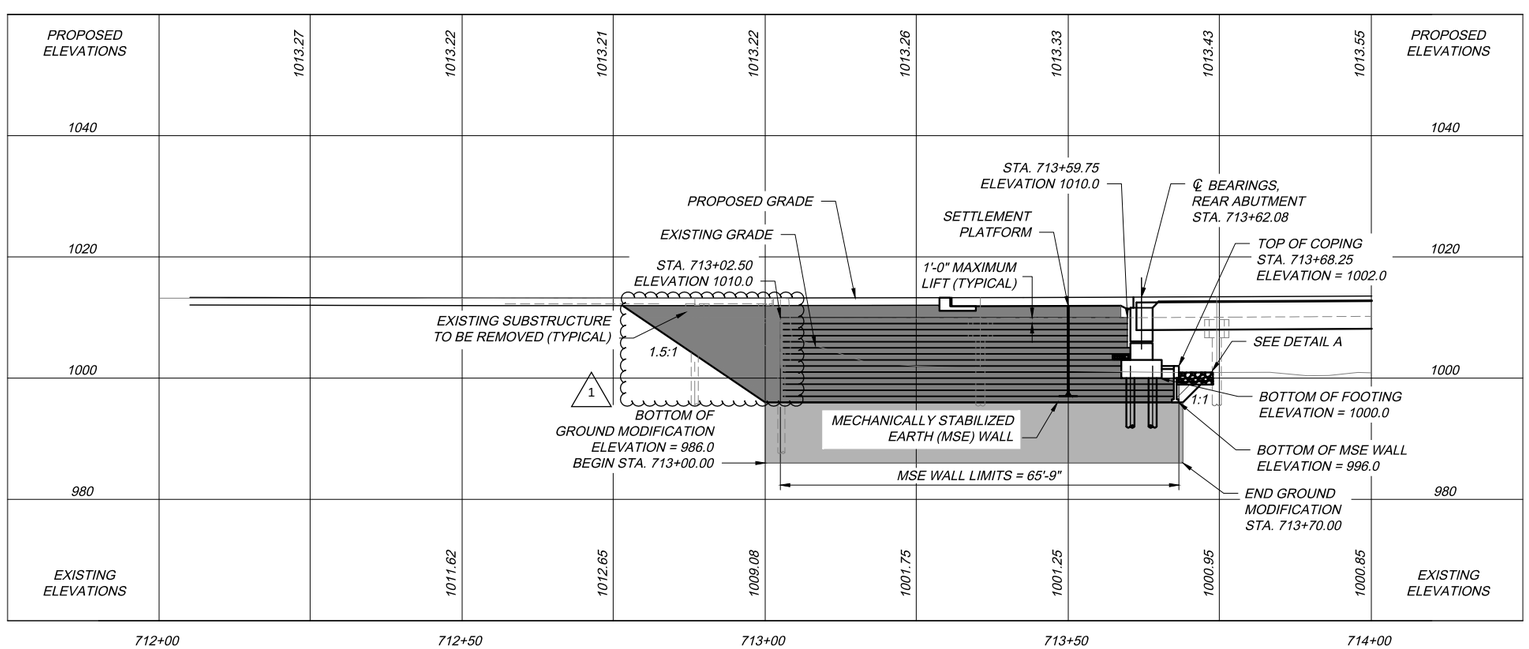

REAR EMBANKMENT ELEVATION

(SHEET PILE WALL NOT SHOWN FOR CLARITY)
1" = 25'

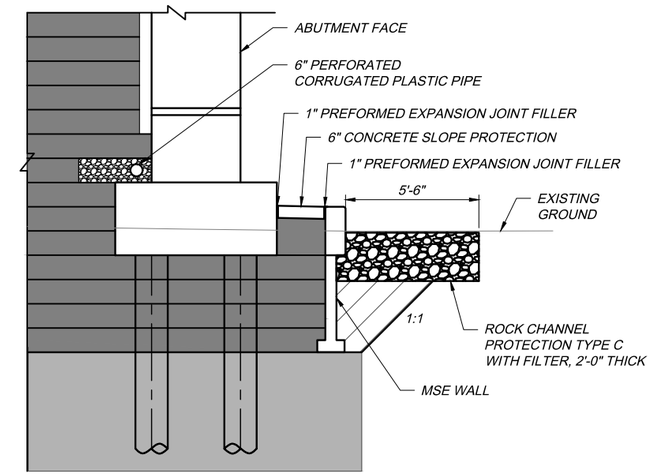

DETAIL A

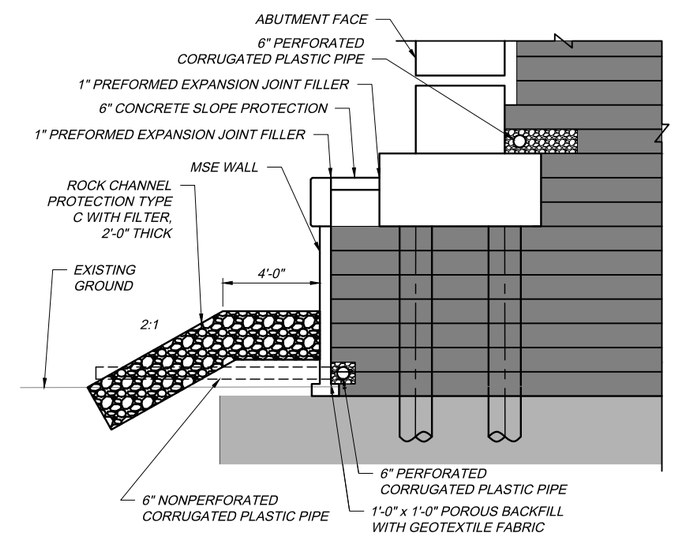

DETAIL B

LEGEND

- ITEM 203 - EXCAVATION
- ITEM 530 SPECIAL - STRUCTURES, GROUND IMPROVEMENTS
- ITEM 840 - SELECT GRANULAR BACKFILL
- EXISTING STRUCTURE REMOVAL & ITEM 503 UNCLASSIFIED EXCAVATION, AS PER PLAN

SHEET PILE DESIGN DATA:
PZC-12 OR EQUIVALENT, MINIMUM EI=6,985 K-IN^2/FT
STRUCTURAL STEEL - ASTM A572 GRADE 50 - YIELD STRENGTH 50 KSI

NOTES

1. SEE SHEET 12/46 FOR MSE DETAILS ALONG ABUTMENT FACE.
2. SEE SHEET 80 / 119 FOR REAR EMBANKMENT DETAILS.
3. SEE SHEE 83/119 FOR FORWARD EMBANKMENT ELEVATION AND LOCATION OF DETAIL B

DESIGN AGENCY
WOOLPERT
ONE EASTON OVAL
SUITE 400
COLUMBUS, OH 43219
T 614-476-6000
F 614-476-6225

NO.	REVISIONS	BY	DATE
1	ADDENDUM 4	PES	08/23
-	-	-	-
-	-	-	-

DESIGNED	CHECKED	DRAWN	IN CHARGE
JYM	TML	JYM	TML

REAR EMBANKMENT ELEVATIONS
OHIO TURNPIKE OVER TINKERS CREEK
SUMMIT COUNTY
M.P. 185.6

PROJECT 43-23-04
DATE: 1/17/23

OHIO TURNPIKE AND INFRASTRUCTURE COMMISSION

FinalPlansBind_81533_SC005.dwg; 5/09/23 - 4:27pm

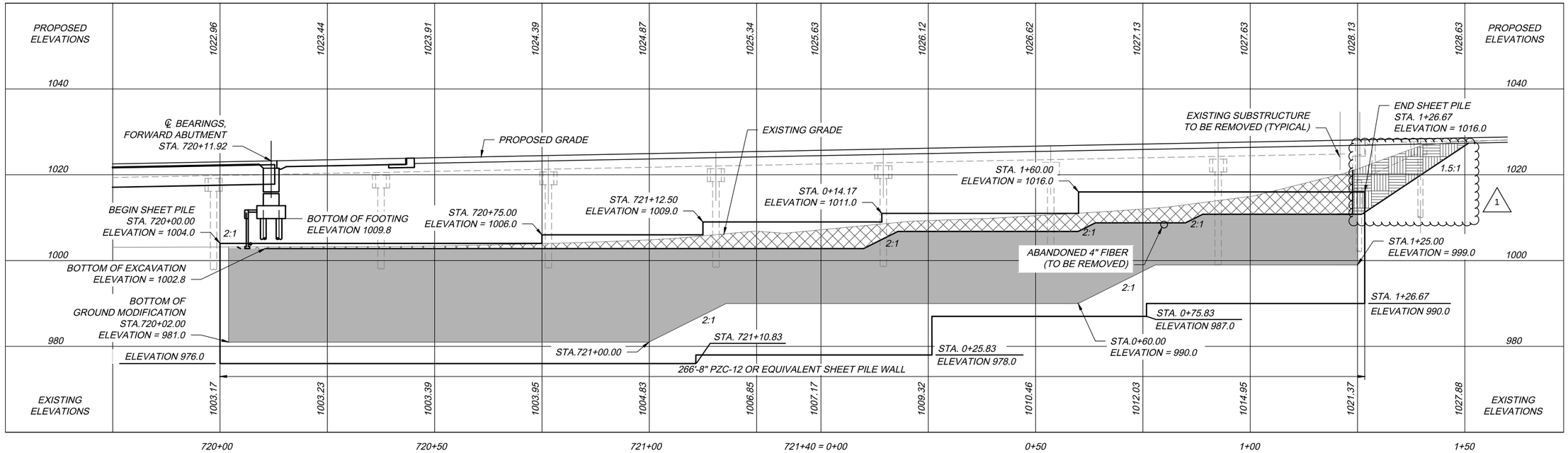

FORWARD EMBANKMENT ELEVATION

(MSE WALL NOT SHOWN FOR CLARITY)
1" = 25'

LEGEND

- ITEM 203 - EXCAVATION
- EXISTING STRUCTURE REMOVAL AND ITEM 503 UNCLASSIFIED EXCAVATION, AS PER PLAN
- ITEM 530 SPECIAL - STRUCTURES, GROUND IMPROVEMENTS
- ITEM 840 - SELECT GRANULAR FILL

SHEET PILE DESIGN DATA:
PZC-12 OR EQUIVALENT, MINIMUM EI=6,985 K-IN^2/FT
STRUCTURAL STEEL - ASTM A572 GRADE 50 - YIELD STRENGTH 50 KSI

NOTES

1. SEE SHEET 81/119 FOR FORWARD EMBANKMENT DETAILS.
2. SEE SHEET 82/119 FOR DETAIL B.

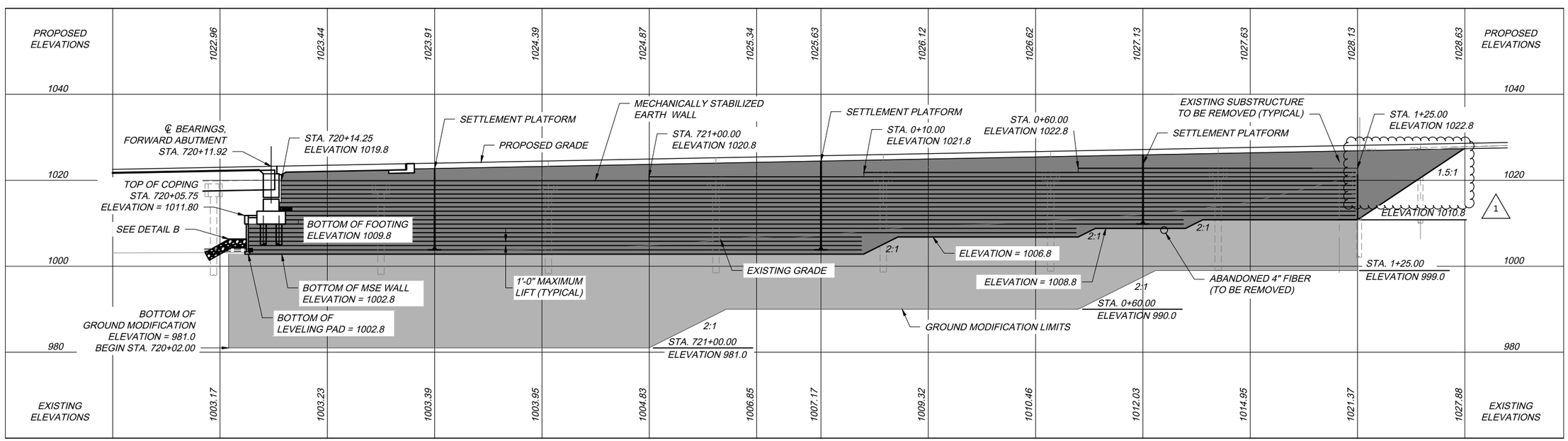

FORWARD EMBANKMENT ELEVATION

(SHEET PILE WALL NOT SHOWN FOR CLARITY)
1" = 25'

DESIGN AGENCY
WOOLPERT
ONE EASTON OVAL
SUITE 400
COLUMBUS, OH 43219
T 614-476-6000
F 614-476-6225

REVISIONS			
NO.		BY	DATE
1	ADDENDUM 4	PES	08/23
-	-	-	-
-	-	-	-

DESIGNED	CHECKED	IN CHARGE
JYM	TML	TML
DRAWN		
JYM		

FORWARD EMBANKMENT ELEVATIONS
OHIO TURNPIKE OVER TINKERS CREEK
SUMMIT COUNTY
M.P. 185.6

PROJECT 43-23-04
DATE: 1/17/23

OHIO TURNPIKE AND INFRASTRUCTURE COMMISSION

FinalPlansBind_81533_SC005.dwg; 5/09/23 - 4:27pm

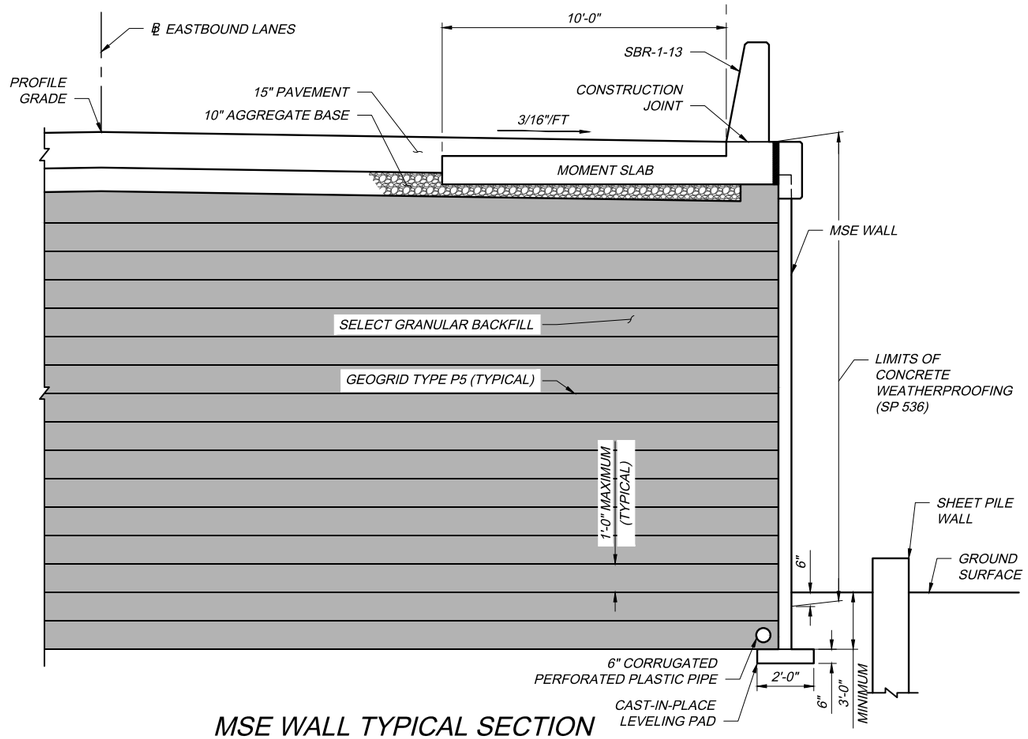

MSE WALL TYPICAL SECTION

(EASTBOUND SHOWN, WESTBOUND SIMILAR)

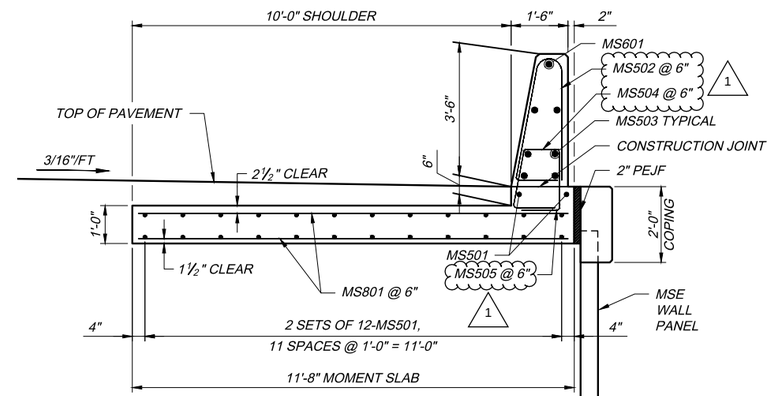

MOMENT SLAB TYPICAL SECTION

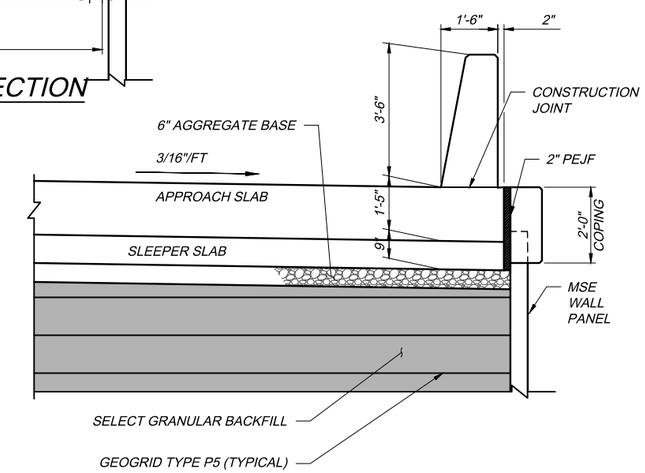

MSE WALL TYPICAL SECTION AT APPROACH SLAB

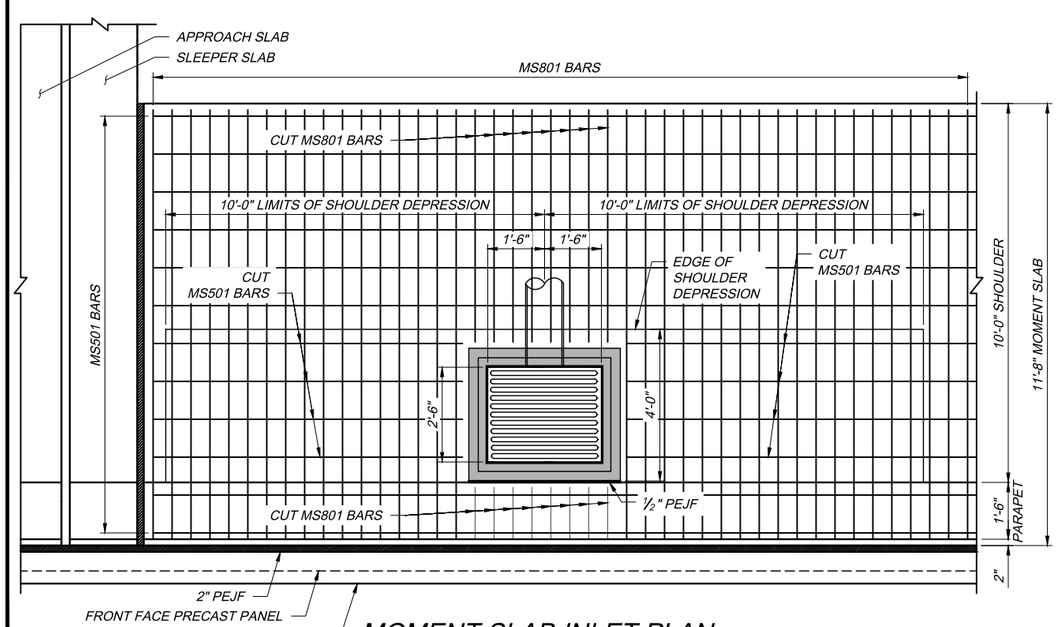

MOMENT SLAB INLET PLAN

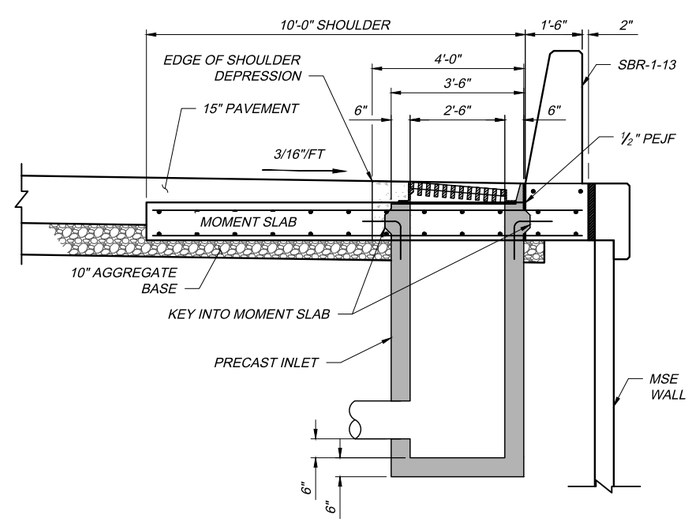

MOMENT SLAB INLET DETAIL

NOTES:

1. WALL PANELS AND COPING JOINT SPACING SHALL NOT EXCEED 20'-0". COPING JOINTS SHALL BE OFFSET FROM PANEL JOINTS SO THAT THEY ARE LOCATED AT THE ℄ OF EACH WALL PANEL. REINFORCING IS TO BE DISCONTINUED ACROSS COPING JOINTS. COPING JOINTS SHALL BE SHOWN IN THE CONTRACTOR'S SHOP AND WORKING DRAWINGS.
2. ALL REINFORCING FOR THE CONCRETE PANELS SHALL BE EPOXY COATED.
3. SP 536 CONCRETE WEATHERPROOFING SHALL BE APPLIED TO THE SURFACES OF THE CONCRETE PANELS AS SHOWN IN THE PLAN.
4. THE BACK FACE OF VERTICAL AND HORIZONTAL JOINTS BETWEEN CONCRETE PANELS SHALL BE COVERED WITH MINIMUM 1'-0" WIDE GEOTEXTILE FABRIC.
5. PLACE CONTROL JOINTS IN MOMENT SLAB AT 15'-0" SPACING, CONSISTING OF 1¼" SAWCUTS. PLACE 1" PEJF EXPANSION JOINTS AT 30'-0" SPACING IN MOMENT SLAB.
6. CUT MOMENT SLAB BARS MS501 AND MS801 AROUND INLET AS NECESSARY.
7. CONCRETE FOR STORM DRAIN INLET SHALL BE CLASS QC1.
8. SEE SHEET 66/119 FOR INLET ELEVATIONS AND ADDITIONAL INLET DETAILS.

DESIGN AGENCY
WOOLPERT
ONE EASTON OVAL
SUITE 400
COLUMBUS, OH 43219
T 614-476-6000
F 614-476-6225

NO.	REVISIONS	BY	DATE
1	ADDENDUM 4	PES	05/23
-	-	-	-
-	-	-	-
-	-	-	-

DESIGNED	CHECKED
JYM	TML
DRAWN	IN CHARGE
JYM	TML

MSE AND MOMENT SLAB DETAILS
OHIO TURNPIKE OVER TINKERS CREEK
SUMMIT COUNTY
M.P. 185.6

PROJECT 43-23-04
DATE: 1/17/23

OHIO TURNPIKE AND INFRASTRUCTURE COMMISSION

FinalPlansBind_81533_SM001.dwg, 5/11/23 - 11:38am

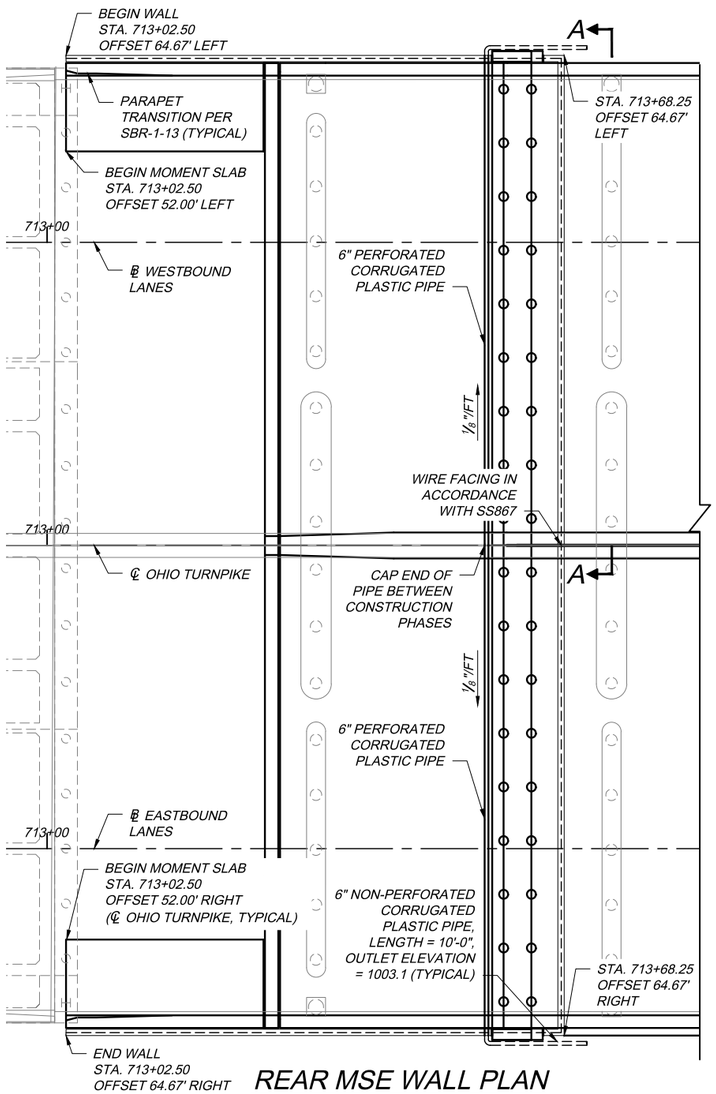

REAR MSE WALL PLAN

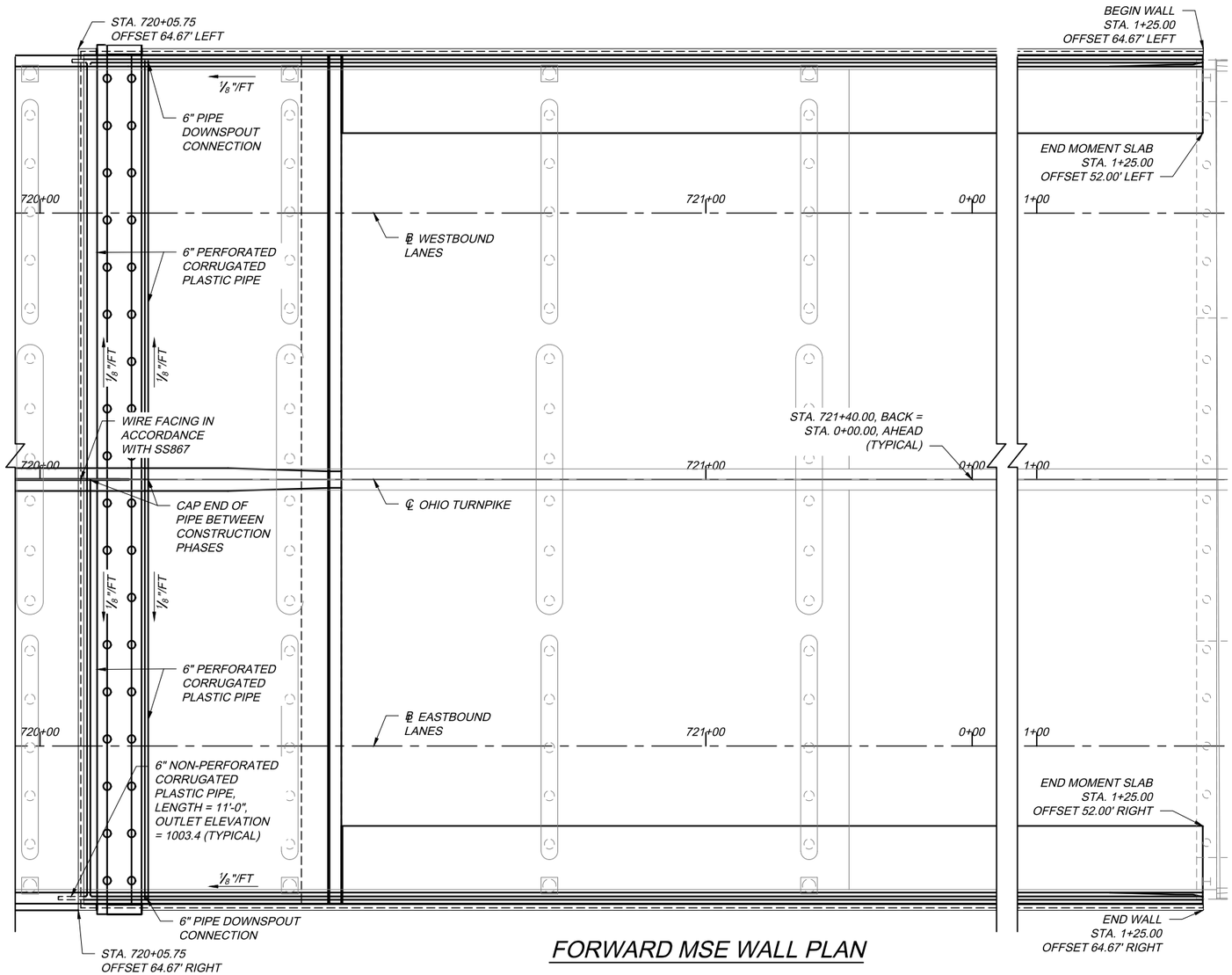

FORWARD MSE WALL PLAN

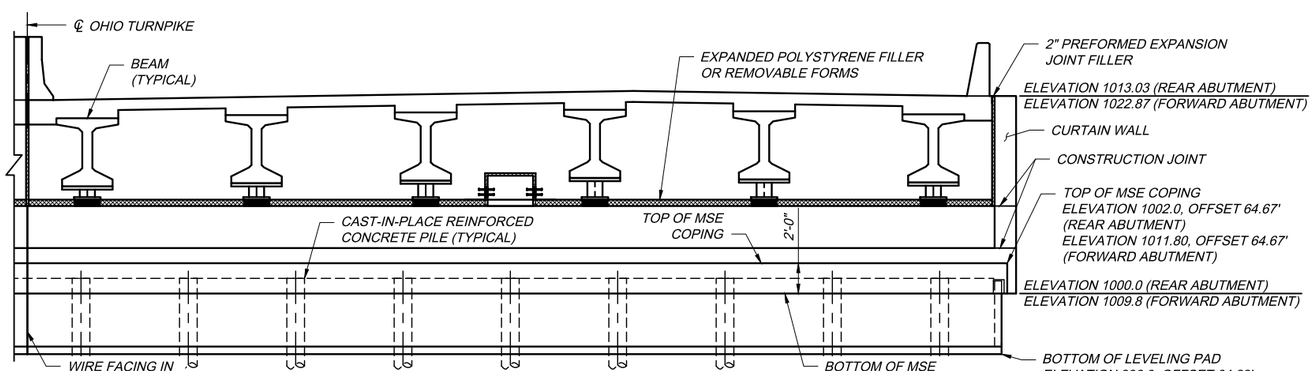

VIEW A-A

(LEFT REAR ABUTMENT SHOWN, ABUTMENT IS SYMMETRICAL ABOUT ℄ OHIO TURNPIKE)
(FORWARD ABUTMENT SAME, EXCEPT AS NOTED)
(MSE REINFORCEMENT NOT SHOWN FOR CLARITY)

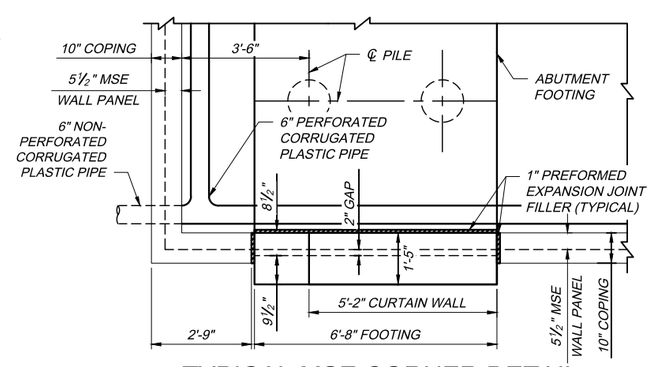

TYPICAL MSE CORNER DETAIL

NOTES:

1. SEE SHEETS 7/46 TO 10/46 FOR EMBANKMENT DETAILS.
2. SEE SHEET 11/46 FOR ADDITIONAL MSE AND MOMENT SLAB DETAILS.
3. SEE SHEETS 16/46 TO 18/46 FOR ABUTMENT DETAILS.

DESIGN AGENCY
WOOLPERT
ONE EASTON OVAL
SUITE 400
COLUMBUS, OH 43219
T 614-476-6000
F 614-476-6225

NO.	REVISIONS	BY	DATE
1	ADDENDUM 4	PES	05/23
-	-	-	-
-	-	-	-

DESIGNED	CHECKED
JYM	TML
DRAWN	IN CHARGE
JYM	TML

MSE WALL MOMENT SLAB INLET DETAILS
OHIO TURNPIKE OVER TINKERS CREEK
SUMMIT COUNTY
M.P. 185.6

PROJECT 43-23-04
DATE: 1/17/23

OHIO TURNPIKE AND INFRASTRUCTURE COMMISSION

FinalPlansBind_81533_SM002.dwg; 5/10/23 - 11:25am