OHIO TURNPIKE AND INFRASTRUCTURE COMMISSION

THE JAMES W. SHOCKNESSY OHIO TURNPIKE

PROJECT NO. 43-24-03

BRIDGE REMOVAL AND BRIDGE DECK REPLACEMENT

OHIO TURNPIKE OVER NORTH COAST INLAND TRAIL M.P. 83.3,
OHIO TURNPIKE OVER WAGGONER ROAD (CR 82) M.P. 83.3
SANDUSKY COUNTY, OHIO

INDEX OF SHEETS

TITLE SHEET 1
SCHEMATIC PLAN & SURVEY CONTROL 2
TYPICAL SECTIONS 3-6
GENERAL NOTES 7-8
MAINTENANCE OF TRAFFIC GENERAL NOTES 9-12
MAINTENANCE OF TRAFFIC TYPICAL SECTIONS 13-16
MAINTENANCE OF TRAFFIC SUB SUMMARIES 17-18
MAINTENANCE OF TRAFFIC PLANS 19-26
DETOUR PLANS - WAGGONER ROAD AND NCIT 27
GENERAL SUMMARY 28-30
SUB SUMMARIES AND DETAILS 31-35
OHIO TURNPIKE PLAN AND PROFILE 36
OHIO TURNPIKE CROSS SECTIONS 37-46
NCIT PLAN AND PROFILE 47-49
NCIT CROSS SECTIONS 50-55
WAGGONER ROAD PLAN AND PROFILE 56-57
WAGGONER ROAD CROSS SECTIONS 58-64
PAVEMENT ELEVATION TABLES 65-66
TRAFFIC CONTROL PLANS 67-75
STRUCTURES OVER 20 FOOT SPAN
M.P. 83.3 OHIO TURNPIKE OVER NORTH COAST INLAND TRAIL 76-81
M.P. 83.3 OHIO TURNPIKE OVER WAGGONER ROAD (CR 82) 82-110

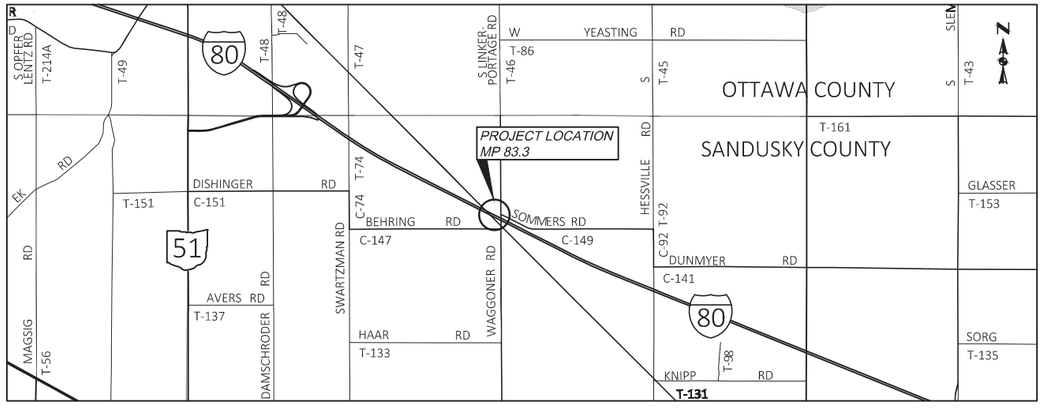

OHIO TURNPIKE AND INFRASTRUCTURE COMMISSION STANDARD DRAWINGS

AS-1	REINFORCED CONCRETE APPROACH SLAB	12/31/19
CB-1	CATCH BASIN, NO. CB-1 WITH SLOPE DRAIN DETAIL	12/31/19
CBR-1	CONCRETE BARRIER, TYPES B-50 AND C-50, AS PER PLAN	02/09/21
CBR-2	CONCRETE BARRIER, SINGLE SLOPE, B-50 AND C-50, AS PER PLAN	09/26/18
CB-4A	INLET, NO. I-3B50 DOUBLE GRATE	09/19/18
DJ-1	DECK JOINT DETAILS, CELLULAR ABUTMENTS	12/31/19
DJ-2	DECK JOINT DETAILS	10/20/17
DR-1	PRECAST FLARED END SECTION	10/20/17
F-1	RIGHT OF WAY FENCE	01/07/21
RPM-1	RAISED PAVEMENT MARKER AND STRIPING LAYOUT	02/17/23
SBR-50	50" SINGLE SLOPE CONCRETE MEDIAN BRIDGE PARAPET	09/19/18
TCR-1	TEMPORARY TRAFFIC CONTROL GENERAL NOTES	02/17/23
TCR-2	TEMPORARY TRAFFIC CONTROL DETAILS, LEGEND, NOTES, AND STANDARD SINGLE LANE CLOSURE	02/17/23
TCR-9	TEMPORARY TRAFFIC CONTROL SHORT DURATION/SHORT TERM SHOULDER CLOSURE	01/07/21
TCR-10	TEMPORARY TRAFFIC CONTROL DOUBLE LANE CLOSURE	02/17/23
TCR-13	SONIC NAP ALERT PATTERN (SNAP)	01/07/21
TCR-15	TEMPORARY TRAFFIC CONTROL SIGNS FOR MAINTENANCE AND CONSTRUCTION	02/17/23
UD-1	UNDERDRAIN DETAILS	09/19/18
TCR-14	TEMPORARY TRAFFIC CONTROL SINGLE LANE CLOSURE WITH PCB	01/07/21

OHIO DEPARTMENT OF TRANSPORTATION STANDARD DRAWINGS

DM-1.3	SLOTTED DRAINS	07/18/14
HW-2.2	HALF-HEIGHT HEADWALLS FOR CONCRETE PIPE	07/20/18
MT-95.40	CLOSING LEFT OR RIGHT LANE OF A MULTI-LANE DIVIDED HIGHWAY WITH PORTABLE CONCRETE BARRIER	07/21/23
MT-100.00	WORK ZONE CROSSOVER LIGHTING SYSTEM	07/16/21
MT-101.60	ROAD CLOSURE USING TYPE 3 BARRIERS	04/21/23
MT-105.10	TEMPORARY SIGN SUPPORT	01/17/20
MGS-4.3	GUARDRAIL TRANSITIONS	01/18/13
SBR-1-13	SINGLE SLOPE CONCRETE BRIDGE RAILING	07/20/18
TC-52.10	SIGN BLANK DETAILS 1	10/18/13
TC-52.20	SIGN BLANK DETAILS 2	01/15/21

OHIO DEPARTMENT OF TRANSPORTATION SUPPLEMENTAL SPECIFICATIONS

SS 800	REVISIONS TO THE 2019 CONSTRUCTION & MATERIAL SPECIFICATIONS	07/21/23
SS 821	ARROW BOARD	04/20/12
SS 832	TEMPORARY SEDIMENT AND EROSION CONTROL	07/21/23
SS 921	ARROW BOARD	04/20/12
SS 1021	ARROW BOARD PREQUALIFICATION PROCEDURES	04/17/20

APPROVED FOR
THE OHIO TURNPIKE AND INFRASTRUCTURE COMMISSION
BY

CHIEF ENGINEER

02/28/2024
DATE

UNDERGROUND UTILITIES

CONTACT ALL SERVICES AT LEAST TWO WORKING DAYS BEFORE YOU DIG

CALL 1-800-362-2764 OR 811 (CELLULAR)

OR GO TO OHIO811.org

OHIO OIL & GAS PRODUCERS UNDERGROUND PROTECTION SERVICE CALL: 614-715-2984

OTIC DIVISION TRADES SUPERVISOR:
440-971-2731 - WEST (M.P. 0.0 - M.P. 126.4)
440-971-2781 - EAST (M.P. 126.4 - M.P. 241.26)

ENGINEERS SEAL:	ENGINEERS SEAL:
STATE OF OHIO RICHARD J. MCGUCKIN E-54615 REGISTERED PROFESSIONAL ENGINEER	STATE OF OHIO AHMED E. HAMID E-67062 REGISTERED PROFESSIONAL ENGINEER
SIGNED:	SIGNED:
DATE: 02/06/2024	DATE: 02/06/2024

PLANS PREPARED BY:

DGL CONSULTING ENGINEERS, LLC
3455 BRIARFIELD BLVD. SUITE E
MAUMEE, OH 43537
PHONE: 419.535.1015
www.dgl-ltd.com

02/06/2024
DATE

DESIGN CONTRACT: 71-21-04

71-21-04-TITLESHEET.dwg; 2/19/24 - 3:49pm

SEQUENCE OF CONSTRUCTION

THE INTENT OF THIS PROJECT IS TO CONSTRUCT THE REHABILITATION OF THE STRUCTURE AT MP 83.3 OVER WAGGONER ROAD AND THE REMOVAL OF THE STRUCTURE AT 83.3 OVER THE NORTH COAST INLAND TRAIL.

CONSTRUCTION PHASING AND TIME OF COMPLETION OF WORK SHALL BE ACCOMPLISHED IN ACCORDANCE WITH SP 103.

THE FOLLOWING IS A BRIEF OUTLINE OF THE CONSTRUCTION PHASING FOR THIS PROJECT:

PRELIMINARY PHASING:

BEGIN EMBANKMENT CONSTRUCTION BELOW THE BRIDGE OVER THE NORTH COAST INLAND TRAIL.

REMOVE THE EXISTING MEDIAN BARRIER, CONSTRUCT THE CROSSOVERS AND PERFORM SNAP MILL AND FILL ON INSIDE LANES ACCORDING TO THE MOT TYPICAL SECTION - PRE-PHASE 1 CROSSOVER CONSTRUCTION AND INSIDE LANE SNAP REMOVAL. TRAFFIC SHALL BE MAINTAINED VIA OTIC STANDARD DRAWING TCR-2.

REMOVE THE OUTSIDE LANE SNAPS BY MILLING AND PAVING WITH ITEM SPECIAL - "SNAP" MILL AND FILL. SEE PRE PHASE 1 - OUTSIDE LANE SNAP REMOVAL MAINTENANCE OF TRAFFIC TYPICAL SECTIONS FOR LOCATIONS. TRAFFIC SHALL BE MAINTAINED VIA OTIC STANDARD DRAWING TCR-2.

PHASE 1:

THIS PHASE SHALL CONSIST OF THE CONSTRUCTION OF THE WESTBOUND STRUCTURE OVER WAGGONER ROAD AND THE REMOVAL OF THE WESTBOUND STRUCTURE OVER THE NORTH COAST INLAND TRAIL. THE CONTRACTOR SHALL MAINTAIN TWO (2) LANES OF TRAFFIC IN EACH DIRECTION ON THE EASTBOUND LANES.

1 NOTE REMOVED

PHASE 2:

THIS PHASE SHALL CONSIST OF THE CONSTRUCTION OF THE EASTBOUND STRUCTURE OVER WAGGONER ROAD AND THE REMOVAL OF THE EASTBOUND STRUCTURE OVER THE NORTH COAST INLAND TRAIL. THE CONTRACTOR SHALL MAINTAIN TWO (2) LANES OF TRAFFIC IN EACH DIRECTION ON THE WESTBOUND LANES.

INTERIM MAINTENANCE OF TRAFFIC PHASES AND OPERATIONS

THE DETAILED MAINTENANCE OF TRAFFIC PLANS THAT ARE PRESENTED IN THE PLANS FOR THIS PROJECT REFLECT MAJOR PHASES OF CONSTRUCTION THAT ARE REQUIRED TO COMPLETE THE CONSTRUCTION OF THIS PROJECT. THE MAINTENANCE OF TRAFFIC PLANS ALSO INCLUDES QUANTITY CALCULATIONS FOR THESE MAJOR PHASES AS DEPICTED IN THE PLANS.

THERE ARE PERIODS DURING THE CONSTRUCTION OF THIS PROJECT WHERE THE CONTRACTOR SHALL BE REQUIRED TO PERFORM WORK TO ESTABLISH THESE MAJOR CONSTRUCTION PHASES OR TO TRANSITION INTO THE NEXT PHASE OF CONSTRUCTION WHICH SHOULD BE CONSIDERED AS INTERIM MAINTENANCE OF TRAFFIC PHASES.

DURING INTERIM MAINTENANCE OF TRAFFIC PHASES, THE CONTRACTOR SHALL BE RESPONSIBLE FOR ALL LABOR, MATERIALS, EQUIPMENT AND TEMPORARY TRAFFIC CONTROL DEVICES, INCLUDING IMPACT ATTENAUTORS, REQUIRED TO ESTABLISH THESE MAJOR PHASES OF CONSTRUCTION.

2 PAYMENT OF THE ABOVE NOTED WORK FOR INTERIM MAINTENANCE OF TRAFFIC PHASES AND OPERATIONS SHALL BE INCLUDED IN THE LUMP SUM BID FOR ITEM SP 614- MAINTAINING TRAFFIC UNLESS ITEMIZED, WHICH SHALL INCLUDE ALL LABOR, EQUIPMENT, MATERIALS AND INCIDENTALS REQUIRED TO COMPLETE THE WORK AS SPECIFIED ABOVE.

MAINTAINING TRAFFIC

THIS ITEM SHALL CONSIST OF MAINTENANCE OF TRAFFIC ON EXISTING ROADWAYS IN ACCORDANCE WITH THE OHIO MANUAL OF UNIFORM TRAFFIC CONTROL DEVICES, CURRENT EDITION, LATEST REVISION, THE SPECIFICATIONS AND THE FOLLOWING:

1. ALL TRAFFIC CONTROL DEVICES, DRUMS, TRAFFIC CONTROL SIGNS, FLASHING ARROW PANELS, FLAGGERS, ETC., AS SHOWN AND LOCATED ON THE MAINTENANCE OF TRAFFIC PLANS, SHALL BE INCORPORATED FOR THE VARIOUS TYPES OF WORK AREAS UNDER NORMAL TRAFFIC CONDITIONS. IF SPECIAL TRAFFIC CONDITIONS EXIST, THE MAINTENANCE OF TRAFFIC PLANS MAY HAVE TO BE MODIFIED. HOWEVER, NO MODIFICATIONS TO THE MAINTENANCE OF TRAFFIC PLANS SHALL BE MADE UNLESS APPROVED BY THE CHIEF ENGINEER IN WRITING PRIOR TO FIELD IMPLEMENTATION.

2. FLAGGERS SHALL BE REQUIRED TO BE IN PLACE WHERE CONSTRUCTION TRAFFIC CROSSES ACTIVE RAMP LANES AT ANY TIME WHEN CONSTRUCTION IS TAKING PLACE.

3. IN ACCORDANCE WITH OTIC STANDARD DRAWING TCB-1, TRUCKS ENTERING AND EXITING THE CONSTRUCTION ZONE AT ALL ACCESS POINTS MUST BE SIGNED IN. ALL ASSOCIATED SIGNS MUST BE COVERED WHEN THE CONSTRUCTION ACCESS POINT IS NOT IN USE.

4. AT ALL ACTIVE HIGH SPEED CROSSOVERS, THE EXISTING CONFLICTING PAVEMENT MARKINGS AND RPM (RAISED PAVEMENT MARKINGS) SHALL BE REMOVED AND CONSTRUCTION ZONE MARKERS AND EDGE LINE SHALL BE INSTALLED TO THE LIMITS AS INDICATED ON THE MAINTENANCE OF TRAFFIC PLANS PRIOR TO OPENING THE ZONE TO TRAFFIC. REMOVAL OF EXISTING PAVEMENT MARKINGS SHALL BE IN ACCORDANCE WITH SP 614C.

5. CONSTRUCTION ZONE MARKERS AND PORTABLE BARRIERS SHALL BE PLACED IN ACCORDANCE WITH OTIC STANDARD DRAWINGS AND AS SHOWN ON THE MAINTENANCE OF TRAFFIC PLANS.

6. TRUCK MOUNTED ATTENUATORS (TMA) ARE CRASH CUSHIONS THAT ARE ATTACHED TO THE REAR OF PROTECTIVE VEHICLES TO REDUCE THE SEVERITY OF REAR-END COLLISIONS. TMA'S ARE INTENDED TO BE USED ON SHADOW VEHICLES IN MOVING OPERATIONS (THAT PARTIALLY OR TOTALLY ENCROACH ON THE PAVED SHOULDER OR TRAVELED LANE), OPERATIONS IN WHICH THE SHADOW VEHICLE IS BEING OCCUPIED, AND WHEN THERE ARE FEW OR NO ADVANCED WARNING SIGNS OR TRAFFIC CONTROL DEVICES. TMA'S ARE TO BE ATTACHED TO MEDIUM DUTY TRUCKS AND ARE TO BE LOCATED IN ADVANCE (AT THE BACK) OF MOVING OPERATIONS.

7. THE CONTRACTOR'S RESPONSIBILITY TO THE SAFETY OF THE MOTORING PUBLIC WHILE PERFORMING THE REQUIREMENTS OF THE CONTRACT SHALL BE IN ACCORDANCE WITH THESE MAINTENANCE OF TRAFFIC PLANS, THE OHIO DEPARTMENT OF TRANSPORTATION, THE OHIO TURNPIKE AND INFRASTRUCTURE COMMISSION SPECIFICATIONS AND STANDARD DRAWINGS, SPECIAL PROVISIONS AND STANDARD DRAWINGS, AND THE "OHIO MANUAL OF UNIFORM TRAFFIC CONTROL DEVICES" (THE MANUAL).

8. THE CONTRACTOR SHALL COVER ALL PERMANENT SIGNS, OR PORTIONS THEREOF, AS REQUIRED BY THE PLANS, AND/OR AS DIRECTED BY THE CHIEF ENGINEER.

9. TEMPORARY SIGN OVERLAYS FOR OVERHEAD SIGNS SHALL BE OF THE SAME COLOR AS THE BACKGROUND OF THE SIGN AND SHALL BE HIGH INTENSITY GRADE SHEETING (TYPE G) ON 0.080 INCH ALUMINUM. ALL TEMPORARY OVERLAY'S SHALL BE SECURELY FASTENED TO THE EXISTING SIGN IN A MANNER THAT DOES NOT DAMAGE THE ORIGINAL SIGN, AND SHALL BE FURNISHED, INSTALLED AND REMOVED BY THE CONTRACTOR.

10. THE CONTRACTOR SHALL IMMEDIATELY CORRECT ANY DEFICIENCY IN TRAFFIC ZONE ALIGNMENT, EQUIPMENT, NUMBER OF DEVICES OR PROCEDURE OF FLAG PERSONS WHICH IS BROUGHT TO HIS/HER ATTENTION BY THE ENGINEER. THE CONTRACTOR SHALL HAVE THE QUALIFIED ZONE PERSON ON THE SITE, AVAILABLE, AND IN RADIO CONTACT AT ALL TIMES WHENEVER WORK IS BEING PERFORMED AND SUITABLY EQUIPPED TO PROPERLY MAINTAIN, REPLACE OR ADJUST ANY TRAFFIC CONTROL DEVICES.

11. THE LENGTH AND DURATION OF A SINGLE LANE CLOSURE AND RESTRICTION SHALL BE AT THE APPROVAL OF THE CHIEF ENGINEER. IT IS THE INTENT TO MINIMIZE THE IMPACT TO THE TRAVELING PUBLIC. LANE CLOSURES OR RESTRICTIONS OVER SEGMENTS OF THE PROJECT IN WHICH NO WORK IS ANTICIPATED WITHIN A REASONABLE TIME FRAME, AS DETERMINED BY THE CHIEF ENGINEER, SHALL NOT BE PERMITTED. THE LEVEL OF UTILIZATION OF MAINTENANCE OF TRAFFIC DEVICES SHALL BE COMMENSURATE WITH THE WORK IN PROGRESS.

12. THE OHIO TURNPIKE AND INFRASTRUCTURE COMMISSION (OTIC) TEMPORARY TRAFFIC CONTROL PHASE DATES, LANE REDUCTION TIME LIMITATIONS, AND LIQUIDATED DAMAGE CLAUSES ARE CONTAINED IN THE FOLLOWING SPECIAL PROVISIONS:

    SP 103, CONSTRUCTION PHASING AND TIME OF COMPLETION
    SP 104, ACCESS TO TURNPIKE AND RESTRICTIONS
    SP 107, TIME OF ESSENCE - LIQUIDATED DAMAGE

13. ALL PORTABLE BARRIER SHOWN ON THE PLANS FOR MAINLINE TEMPORARY TRAFFIC CONTROL WILL BE AS PER SP 622. THE SAME BARRIER CAN BE USED FOR THE VARIOUS PHASES. THE COST FOR TRANSPORTING, INSTALLING, SHIFTING, RE-SETTING, MAINTAINING, REMOVAL AND STORING THE PORTABLE BARRIER FOR EACH PHASE SHALL BE INCLUDED IN THE ORIGINAL UNIT COST OF SUPPLYING THE PORTABLE BARRIER FOR ITEM SP 622. GLARE SCREENS SHALL BE INSTALLED ON PORTABLE BARRIER AS SPECIFIED IN THE PLANS AND SPECIFICATIONS. PAYMENT OF THE GLARE SCREENS SHALL BE IN ACCORDANCE WITH THE SPECIAL PROVISION SPECIAL - GLARE SCREENS AND BE CONSIDERED INCIDENTAL TO ITEM SP 622.

14. ALL TEMPORARY TRAFFIC CONTROL SIGNS SHALL BE NEW AT THE START OF THE PROJECT. IF THE SIGNS ARE NEEDED FOR THE SECOND YEAR OF THE PROJECT, THEY SHALL BE WASHED, OR REPLACED IF NOT IN AN ACCEPTABLE CONDITION PRIOR TO BEING INSTALLED.

15. AFTER THE MAINTENANCE CROSSOVERS ARE OPENED, AN OTIC REPRESENTATIVE SHALL REINSTALL THE "EMERGENCY AND AUTHORIZED VEHICLES ONLY" AND "NO U-TURN" SIGNS INCLUDING THE MOUNTING HARDWARE.

16. SAFETY AND CONTINUITY OF OPERATIONS OF TRAFFIC ON THE OHIO TURNPIKE SHALL BE OF THE UTMOST IMPORTANCE AND SHALL AT ALL TIMES BE PROTECTED AND SAFEGUARDED. THE CONTRACTOR SHALL DAILY, NOT LATER THAN 12 O'CLOCK PM (NOON), INFORM THE RESIDENT ENGINEER AS TO HIS PREPARATIONS AND METHOD OF WORK FOR THE FOLLOWING DAY WHENEVER SUCH WORK SHALL BE SUBMITTED TO THE CHIEF ENGINEER FOR HIS APPROVAL, WITHOUT WHICH IT SHALL NOT BE COMMENCED OR PROSECUTED.

PAYMENT FOR THE MAINTENANCE OF TRAFFIC ITEMS, UNLESS OTHERWISE SPECIFIED SEPARATELY, SHALL BE PAID FOR UNDER THE LUMP SUM PRICE BID FOR ITEM SP 614 - MAINTAINING TRAFFIC, WHICH SHALL INCLUDE ALL LABOR, EQUIPMENT, MATERIALS, AND INCIDENTALS REQUIRED TO COMPLETE THE WORK AS DETAILED IN THE PLANS.

ITEM SP 614ZP - ZONE PERSON WITH ZONE VEHICLE

THIS ITEM SHALL CONSIST OF FURNISHING A QUALIFIED ZONE PERSON(S) (ZP) WITH ZONE VEHICLE (ZV) AS DESCRIBED IN THIS SPECIFICATION FOR THE PURPOSE OF PROTECTING THE MOTORING PUBLIC AND THE WORK WHILE THE CONTRACT IS IN FORCE. THE ZP SHALL HAVE A FULL WORKING KNOWLEDGE OF THE MAINTENANCE OF TRAFFIC PLANS AND SPECIAL PROVISIONS.

A "WORK ZONE" IS DEFINED AS AN AREA OF A HIGHWAY WITH CONSTRUCTION, MAINTENANCE, OR UTILITY WORK ACTIVITIES. A WORK ZONE IS TYPICALLY MARKED BY TEMPORARY TRAFFIC CONTROL DEVICES SUCH AS, BUT NOT LIMITED TO, SIGNS, CHANNELIZING DEVICES, BARRIERS, PAVEMENT MARKINGS, AND/OR WORK VEHICLES. IT EXTENDS FROM THE FIRST WARNING SIGN TO THE END ROAD WORK SIGN OR THE LAST TTC DEVICE.

A ZP WITH ZV SHALL BE REQUIRED AS FOLLOWS:

(a) THE CONTRACTOR HAS A WORK ZONE IN PLACE ON TURNPIKE MAINLINE, SHOULDER AND/OR TURNPIKE TOLL PLAZA RAMPS

WHILE A WORK ZONE IS IN PLACE, THE ZP SHALL MAINTAIN THE ZONE ON A CONTINUAL BASIS TWENTY-FOUR (24) HOURS PER DAY, SEVEN (7) DAYS PER WEEK.

IF THE CONTRACTOR REMOVES ALL TTC DEVICES FROM THE MAINLINE AS DESCRIBED IN TCR-1 NOTE 20 THEN A ZP IS NOT REQUIRED.

(b) THE CONTRACTOR HAS A WORK ZONE IN PLACE ON A ROADWAY ABOVE OR BELOW MAINLINE TURNPIKE.

WHILE ZONES ARE IN PLACE ON A ROADWAY ABOVE OR BELOW MAINLINE TURNPIKE AND THE CONTRACTOR IS ACTIVELY WORKING ON THE PROJECT, THE ZP SHALL MAINTAIN THE ZONE ON A CONTINUAL BASIS.

WHILE ZONES ARE IN PLACE ON A ROADWAY ABOVE OR BELOW MAINLINE TURNPIKE AND THE CONTRACTOR IS NOT ACTIVELY WORKING ON THE PROJECT, THE ZONE WILL BE MAINTAINED BY THE COMMISSION. THE COMMISSION WILL REPAIR OR REPLACE ANY DAMAGED OR MISSING TEMPORARY TRAFFIC CONTROL DEVICES. THE COMMISSION WILL NOTIFY THE CONTRACTOR OF THE REPLACED OR REPAIRED DEVICES. IT WILL BE THE CONTRACTOR'S RESPONSIBILITY TO REPLACE AND RETURN THE COMMISSION'S PROPERTY.

METHOD OF CALCULATION

THE FOLLOWING IS FOR INFORMATIONAL PURPOSES ONLY. THE NUMBER OF WORK ZONES NEEDED, AND THE DURATION OF EACH WORK ZONE FALLS UNDER MEANS AND METHODS OF CONSTRUCTION. FOR ESTIMATING PURPOSES, THE DESIGN ENGINEER HAS CALCULATED THE NUMBER OF HOURS NEEDED FOR THIS PAY ITEM BASED ON THE FOLLOWING ASSUMPTIONS AND THE REQUIREMENTS NOTED ABOVE:

PRELIMINARY PHASING

15 DAYS X 10 HOURS = 150 HOURS

PHASE 1

225 DAYS X 24 HOURS = 5400 HOURS

PHASE 2

240 DAYS X 24 HOURS = 5760 HOURS

TOTAL NUMBER OF HOURS CALCULATED: 11310

THE FOLLOWING QUANTITY HAS BEEN CARRIED TO THE GENERAL SUMMARY:

ITEM SP 614ZP - ZONE PERSON WITH ZONE VEHICLE ..... 11310 HOURS

NO.	REVISIONS	BY	DATE
1	NOTE REMOVED	SRC	3/27/24
2	NOTE REVISED	SRC	4/1/24
-	-	-	-

DESIGN AGENCY
DGL CONSULTING ENGINEERS, LLC
3455 BRIARFIELD BLVD, SUITE E
MAUMEE, OH 43537

DESIGNED	CHECKED
SRC	RJM
DRAWN	IN CHARGE
SRC	AEH

MAINTENANCE OF TRAFFIC NOTES

SANDUSKY COUNTY

M.P. 83.3

PROJECT 43-24-03

DATE: 09/01/23

OHIO TURNPIKE AND INFRASTRUCTURE COMMISSION

71-21-04-MOT NOTES.dwg; 4/01/24 - 1:58pm

CONTINUOUS ACCESS

THE CONTRACTOR SHALL MAINTAIN SAFE AND ADEQUATE DRIVEWAYS AND WALKWAYS IN ORDER TO PROVIDE CONTINUOUS ACCESS FOR PASSENGER VEHICLES, TRUCKS, AND SAFETY EQUIPMENT TO ALL ADJOINING PROPERTIES.

THE COST FOR ALL MATERIALS, EQUIPMENT, AND LABOR NECESSARY TO PROVIDE CONTINUOUS ACCESS SHALL BE INCLUDED IN THE LUMP SUM PRICE TOR SP 614 MAINTAINING TRAFFIC.

COVERING OF GROUND-MOUNTED SIGNS- GENERAL

WHEN REQUIRED BY OTHER ITEMS OR INCIDENTALLY TO SP 614 MAINTAINING TRAFFIC, COVER EXISTING GROUND-MOUNTEDSIGNS WITH PLYWOOD OR OSB BLANKS (1/2" MINIMUM THICKNESS) COVERING 80% OF THE SIGN AREA AND ALL OF THE SIGN LEGEND. THE USE OF LOW QUALITY MATERIALS SUCH AS DUCT TAPE AND BLACK PLASTIC IS NOT PERMITTED.

PERMANENT PAVEMENT MARKINGS

AFTER PLACING THE SURFACE COURSE, THE CONTRACTOR MAY PLACE PERMANENT PAVEMENT MARKINGS INSTEAD OF PLACING WORK ZONE PAVEMENT MARKINGS, WHICH SHALL BE NON-PERFORMED AT THESE LOCATIONS.

PERMANENT PAVEMENT MARKINGS SHALL BE IN PLACE AS INDICATED IN THE PLANS PRIOR TO OPENING THE ROADWAY TO TRAFFIC.

ITEM 642 - PAVEMENT MARKING MISC: FINAL PAVEMENT MARKING PREPARATION

THIS ITEM SHALL CONSIST OF APPLYING A BASE LAYER OF PAVEMENT MARKING PRIOR TO THE PLACEMENT OF FINAL MARKINGS.

IF FINAL PAVEMENT MARKING WILL BE PLACED WHERE 614.11 OR SP 614B PAVEMENT MARKINGS WERE REMOVED BY EITHER SP 614C GRINDING METHOD OR WATER-BLAST METHOD, THEN THE ASPHALT PAVEMENT MUST FIRST BE PREPPED BY APPLYING A BLACK SHADOW MARKING. THE BLACK SHADOW MARKING SHALL CREATE A 1-INCH BORDER AROUND THE FINAL MARKING BEING PLACED.

THE BLACK SHADOW MARKING SHALL BE NON-REFLECTIVE AND PLACED AT THE SAME RATE AS ITEM 642 TYPE 1 MARKINGS.

THE FOLLOWING ESTIMATED QUANTITIES HAVE BEEN CARRIED TO THE GENERAL SUMMARY FOR USE AT LOCATIONS IDENTIFIED BY THE ENGINEER PRIOR TO THE PLACEMENT OF WORK ZONE PAVEMENT MARKINGS.

ITEM 642-PAVEMENT MARKING MISC.: FINAL PAVEMENT MARKING PREPARATION..... 2.88 MILE

ITEM 626A - CONSTRUCTION ZONE MARKER (CZM)

THIS ITEM SHALL CONSIST OF PROVIDING ITEM 626A CONSTRUCTION ZONE MARKERS (CZM'S) AT THE LOCATIONS SHOWN ON THE MAINTENANCE OF TRAFFIC PLAN SHEETS ACCORDING TO THE OHIO TURNPIKE COMMISSION STANDARD DRAWING TCR-12. THE FOLLOWING QUANTITIES ARE CARRIED TO THE GENERAL SUMMARY AND SHALL INCLUDE ALL MATERIAL, LABOR, AND EQUIPMENT NECESSARY TO SUPPLY AND REMOVE THE CZM'S.

STAGE 1

ITEM 626A - CONSTRUCTION ZONE MARKER (WHITE) 1266 EACH

ITEM 626A - CONSTRUCTION ZONE MARKER (YELLOW) 422 EACH

STAGE 2

ITEM 626A - CONSTRUCTION ZONE MARKER (WHITE) 1332 EACH

ITEM 626A - CONSTRUCTION ZONE MARKER (YELLOW) 444 EACH

THE FOLLOWING TOTAL QUANTITY OF ITEM 626A - CONSTRUCTION ZONE MARKER HAS BEEN CARRIED TO THE GENERAL SUMMARY. 3464 EACH

WAGGONER ROAD AND N.C.I.T. DETOUR

1. WAGGONER ROAD WILL BE DETOURED VIA SOMMERS ROAD, BEHRING ROAD, SWARTZMAN ROAD AND HESSVILLE ROAD.
2. N.C.I.T. TRAIL WILL BE DETOURED VIA SHULTZ-PORTAGE ROAD AND BEHRING ROAD. (SEE DETOUR PLANS ON SHEET 27 OF 110)

ITEM SPECIAL - SNAP MILL AND FILL

MAINTENANCE OF TRAFFIC ON THE MEDIAN/LEFT SHOULDER, AND THE RIGHT SHOULDER(S) WILL REQUIRE THE EXISTING "SNAPs" TO BE MILLED AND FILLED. PAYMENT FOR THIS ITEM SHALL INCLUDE ALL OF THE FOLLOWING: REMOVAL OF THE EXISTING "SNAPs" BY MILLING 1 $\frac{1}{2}$" DEEP AND 4' WIDE; TACK COATING ALL EXPOSED MILLED SURFACES WITH NON-TRACKING TACK COAT; AND PAVING THE MILLED AREA WITH 1 $\frac{1}{2}$" OF ITEM SP 404 - ASPHALT CONCRETE SURFACE COURSE, USING CRUSHED STONE, PG 64-22. ALL LABOR, EQUIPMENT, MATERIALS, AND INCIDENTALS NEEDED TO COMPLETE THE ABOVE MENTIONED WORK SHALL BE INCLUDED IN THE UNIT PRICE BID FOR ITEM SPECIAL - "SNAP" MILL AND FILL (FEET).

ADDITIONALLY, EASTBOUND AND WESTBOUND FOR BOTH STAGES, THE 4' WIDE SNAP MILL AND FILL SHALL BE CENTERED TO INCLUDE THE REMOVAL OF THE EXISTING SNAPs, THE AREA BETWEEN THE YELLOW/WHITE EDGE LINE AND THE EXISTING SNAPs, AND THE YELLOW/WHITE EDGE LINE. THE CONTRACTOR SHALL PLAN ITS OPERATIONS ACCORDINGLY TO COMPLETE THIS WORK. ADJUSTMENTS MAY BE MADE BY THE CHIEF ENGINEER TO ENSURE THAT THE YELLOW/WHITE EDGE LINE AND SNAP'S ARE REMOVED APPROPRIATELY. REMOVAL OF THE EXISTING PAVEMENT MARKINGS IN THE SNAP REMOVAL AREA SHALL BE CONSIDERED INCIDENTAL TO THIS WORK.

ITEM 615 - PAVEMENT FOR MAINTAINING TRAFFIC, CLASS A, AS PER PLAN

THIS ITEM SHALL CONSIST OF CONSTRUCTING THE TEMPORARY CROSSOVERS AS DETAILED IN THE MAINTENANCE OF TRAFFIC TYPICAL SECTIONS ON SHEET 13 AT THE LOCATIONS SHOWN IN THE PLANS AND THE FOLLOWING NOTES.

1. THE CONTRACTOR SHALL REMOVE THE EXISTING SURFACE COURSE OF ASPHALT WITHIN THE LIMITS OF THE PROPOSED CROSSOVER TEMPORARY PAVEMENT IN ORDER TO PROVIDE THE MINIMUM 1 $\frac{1}{2}$" PAVEMENT THICKNESS.
2. THE CONTRACTOR SHALL REMOVE THE ENTIRE MEDIAN BARRIER WALL DURING DEMOLITION OPERATIONS. THE MEDIAN BARRIER WALL FOUNDATION MAY REMAIN DURING CONSTRUCTION AND BE REPLACED DURING THE CROSSOVER RESTORATION.
3. THE CONTRACTOR SHALL TERMINATE THE MULTICELL CONDUIT BY PERMANENT CAPPING. THE CONTRACTOR SHALL NOT REPLACE THE MULTICELL CONDUIT.
4. THE CONTRACTOR SHALL TACK COAT ALL SURFACES WITHIN THE LIMITS OF THE CROSSOVER WITH NON-TRACKING TACK, AND INSTALL THE TEMPORARY PAVEMENT AND TEMPORARY 12" SLOTTED DRAIN, TYPE 2.
5. AT THE COMPLETION OF THE PROJECT THE CONTRACTOR SHALL REMOVE THE TEMPORARY CROSSOVER AND RETURN THE AREA TO ITS ORIGINAL CONDITION AS SHOWN IN THE CROSSOVER RESTORATION TYPICAL SECTION ON SHEET 13, INCLUDING THE REINSTALLATION OF THE TYPE B-50 OR C-50 BARRIER ACCORDING TO OTIC STANDARD DRAWING CBR-1.

THE CONTRACTOR SHALL MEET ALL REQUIREMENTS OF SECTION 615 OF THE ODOT CMS.

PER 254.05 PAVEMENT SURFACE TOLERANCES SHALL BE WITHIN $\frac{1}{8}$ INCH PER TEN (10) FEET. PAVEMENT SMOOTHNESS SHALL BE CORRECTED PER SP 400S.

ALL COSTS FOR FOR THE WORK DESCRIBED ABOVE INCLUDING ALL LABOR, MATERIALS, AND EQUIPMENT NECESSARY TO COMPLETE THE WORK SHALL BE INCLUDED IN THE PRICE BID FOR ITEM 615 - PAVEMENT FOR MAINTAINING TRAFFIC, CLASS A, AS PER PLAN.

THE FOLLOWING QUANTITY HAS BEEN CARRIED TO THE GENERAL SUMMARY FOR THE WORK DESCRIBED ABOVE:

ITEM 615 - PAVEMENT FOR MAINTAINING TRAFFIC, CLASS A, AS PER PLAN.....4267 SQ. YD

CROSSOVER CONSTRUCTION AND RESTORATION

TRAFFIC SHALL BE MAINTAINED VIA OTIC STANDARD DRAWING TCR-14 WHILE CONSTRUCTION AND RESTORATION OF THE CROSSOVERS ARE TAKING PLACE. THE FOLLOWING QUANTITIES HAVE BEEN INCLUDED IN THE GENERAL SUMMARY FOR THE CONSTRUCTION AND RESTORATION OF THE CROSSOVERS:

ITEM 614 WORK ZONE IMPACT ATTENUATOR.....8 EACH

ITEM 614 BARRIER REFLECTOR, TYPE B (ONE-WAY).....136 EACH

ITEM 614 OBJECT MARKER, ONE WAY.....136 EACH

ITEM SP 622 PORTABLE BARRIER, 32", (WITHOUT GLARE SCREEN).....6320 FEET

2

ITEM 614 - WORK ZONE CROSSOVER LIGHTING SYSTEM

THE CONTRACTOR SHALL INSTALL A WORK ZONE CROSSOVER LIGHTING SYSTEM AT EACH CROSSOVER LOCATION ACCORDING TO ODOT STANDARD CONSTRUCTION DRAWING MT-100.00.

THE FOLLOWING QUANTITY HAS BEEN CARRIED TO THE GENERAL SUMMARY

ITEM 614 - WORK ZONE CROSSOVER LIGHTING SYSTEM.....2 EACH

DRAINAGE ITEMS FOR MAINTAINING TRAFFIC

THE TEMPORARY 12", SLOTTED DRAIN, TYPE 2 CONSISTS OF 12 INCH DIAMETER SLOTTED DRAIN ALUMINUM COATED STEEL CONDUIT 707.01 WITH 6 INCH TRAPEZOIDAL GALVANIZED SOLID BAR GRATE AS APPROVED BY THE ENGINEER.

PAYMENT FOR ALL WORK ASSOCIATED WITH DRAINAGE ITEMS (TEMPORARY AND TO REMAIN) DETAILED ON THE MAINTENANCE OF TRAFFIC SHEETS SHALL BE INCLUDED IN THE LUMP SUM BID FOR ITEM 614, MAINTAINING TRAFFIC.

1 NOTE REMOVED

NO.	REVISIONS	BY	DATE
1	NOTE REMOVED	SRC	3/27/24
2	NOTE ADDED	SRC	4/11/24
-	-	-	-

DESIGN AGENCY
DGL CONSULTING ENGINEERS, LLC
3455 BRIARFIELD BLVD, SUITE E
MAUMEE, OH 43537

DESIGNED	CHECKED
SRC	RJM
DRAWN	IN CHARGE
SRC	AEH

MAINTENANCE OF TRAFFIC NOTES

SANDUSKY COUNTY

M.P. 83.3

PROJECT 43-24-03

DATE: 09/01/23

OHIO TURNPIKE AND INFRASTRUCTURE COMMISSION

71-21-04-MOT NOTES.dwg; 4/01/24 - 1:58pm

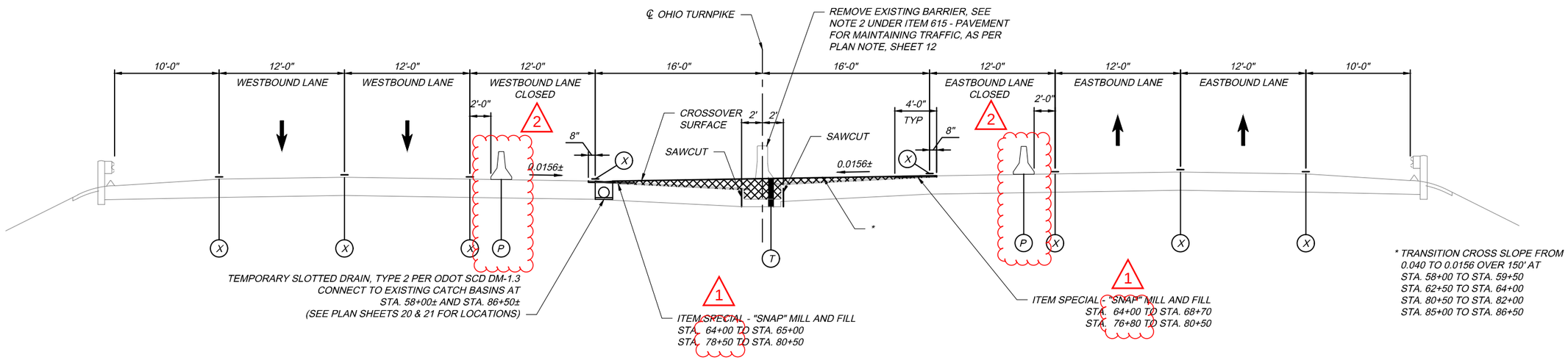

MOT TYPICAL SECTION - CROSSOVER CONSTRUCTION AND INSIDE LANE SNAP REMOVAL

STA. 58+00 TO STA. 64+00
STA. 80+50 TO STA. 86+50 (OPPOSITE HAND)

LEGEND

		PROPOSED TEMPORARY PAVEMENT, MINIMUM 1 ½" THICKNESS. FOR ADDITIONAL CROSSOVER INFORMATION SEE NOTE ITEM 615 - PAVEMENT FOR MAINTAINING TRAFFIC, CLASS A, AS PER PLAN ON SHEET 12
1	SP 404	ASPHALT CONCRETE SURFACE COURSE, USING CRUSHED STONE, PG 64-22 (T=1-1/2")
2	SP 402	ASPHALT CONCRETE INTERMEDIATE COURSE OR RECYCLED ASPHALT CONCRETE INTERMEDIATE COURSE, PG 64-22 (T=1-3/4")
3	SP 302	ASPHALT CONCRETE BASE, PG 64-22 (T=12") (2 EQUAL LIFTS)
4	SP 304	AGGREGATE BASE (T=6")
5	ITEM 407	NON-TRACKING TACK COAT (APPLIED @ 0.06 GAL./S.Y.)
6	ITEM 622	CONCRETE BARRIER, TYPE C-50, AS PER PLAN
7	SP 404A	JOINT SEALER (APPLIED TO VERTICAL FACE)
X		EXISTING PAVEMENT MARKINGS
T		PAVEMENT FOR MAINTAINING TRAFFIC, TYPE A, AS PER PLAN
P		PORTABLE CONCRETE BARRIER (WITHOUT GLARE SCREEN)

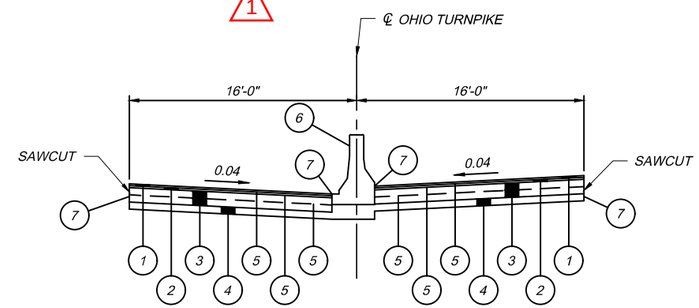

CROSSOVER RESTORATION TYPICAL SECTION

STA. 58+00 TO STA. 64+00
STA. 80+50 TO STA. 86+50 (OPPOSITE HAND)

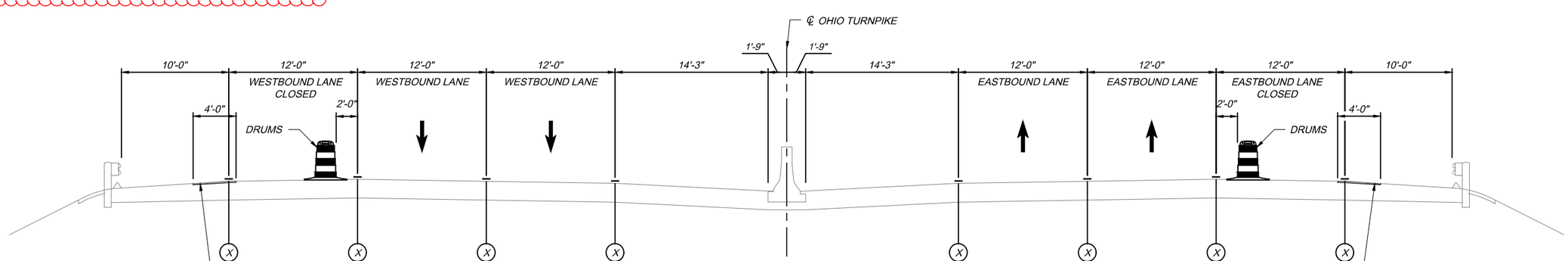

MOT TYPICAL SECTION - PRE-PHASE 1 SNAP REMOVAL OUTSIDE LANES

SEE SHEET 14 FOR LEGEND AND NOTES

DESIGN AGENCY
DGL CONSULTING ENGINEERS, LLC
3455 BRIARFIELD BLVD, SITE E
MAUMEE, OH 43537

NO.	REVISIONS	BY	DATE
1	REVISED STATIONS	SRC	3/26/24
2	REVISED SECTION	SRC	4/22/24
-	-	-	-

DESIGNED	CHECKED
SRC	RJM
DRAWN	IN CHARGE
SRC	AEH

MAINTENANCE OF TRAFFIC TYPICAL SECTIONS
CROSSOVER AND SNAP REMOVAL
SANDUSKY COUNTY
M.P. 83.3

PROJECT 43-24-03
DATE: 09/01/23

OHIO TURNPIKE AND INFRASTRUCTURE COMMISSION

71-21-04-MOT TYPICAL.dwg; 4/03/24 - 10:31am

SHEET NUMBER 8	31	32	33	34	35	ITEM	GRAND TOTAL	UNIT	DESCRIPTION	SEE SHT. NO.
									GENERAL	
						IB.ART.6	LUMP	LS	PREMIUM FOR CONTRACT PERFORMANCE BOND AND PAYMENT BOND	
						SP 614	LUMP	LS	MAINTAINING TRAFFIC	
						SP 619	24	MONTH	FIELD OFFICE	
						SP 623	LUMP	LS	CONSTRUCTION LAYOUT SURVEY	
						624	LUMP	LS	MOBILIZATION	
									ROADWAY	
						201	LUMP	LS	CLEARING AND GRUBBING	
2						201	2	EACH	TREE REMOVED, 18"	
1						201	1	EACH	TREE REMOVED, 30"	
2						201	2	EACH	TREE REMOVED, 48"	
2						201	2	EACH	TREE REMOVED, 60"	
	1,076			1		202	1 1,076	FT	GUARDRAIL REMOVED, AS PER PLAN	7
	437					202	437	FT	CONCRETE BARRIER REMOVED	
				4,800		202	4,800	SY	PAVEMENT REMOVED, AS PER PLAN	7
			2			202	2	EACH	HEADWALL REMOVED	
			352			202	352	FT	PIPE REMOVED, 24" AND UNDER	
			62			202	62	FT	PIPE REMOVED, OVER 24"	
	420					202	420	FT	FENCE REMOVED	
		2681				203	2,681	CY	EXCAVATION	
		56421				203	56,421	CY	EMBANKMENT, AS PER PLAN	7
				13,318	3,414	204	16,732	SY	SUBGRADE COMPACTION	
100						204	100	CY	EXCAVATION OF SUBGRADE	
100						204	100	CY	GRANULAR MATERIAL TYPE B	
				19		209	19	STA	LINEAR GRADING, AS PER PLAN	7
	37.5					606	38	FT	GUARDRAIL, TYPE MGS	
	1,837.5					606	1,838	FT	GUARDRAIL, TYPE MGS WITH LONG POSTS	
	1					606	1	EACH	ANCHOR ASSEMBLY, MGS TYPE B	
	2					606	2	EACH	MGS BRIDGE TERMINAL ASSEMBLY, TYPE 1	
	2					606	2	EACH	MGS BRIDGE TERMINAL ASSEMBLY, TYPE 2	
	1,160					607	1,160	FT	FENCE, TYPE 47, AS PER PLAN	36
					80	608	80	SF	DETECTABLE WARNING, AS PER PLAN	35
	799					622	799	FT	CONCRETE BARRIER, SINGLE SLOPE, TYPE B-50 AND C-50, AS PER PLAN	8
						SPECIAL	LUMP	LS	ROADWAY, MISC.: EXISTING STRUCTURE MONITORING	78
						SPECIAL	4	EACH	ROADWAY, MISC.: SETTLEMENT PLATFORM	78
						SPECIAL	4	EACH	ROADWAY, MISC.: VIBRATING WIRE PIEZOMETER	79
									EROSION CONTROL	
			1			601	1	SY	TIED CONCRETE BLOCK MAT, TYPE 1	
			16			601	16	CY	ROCK CHANNEL PROTECTION, TYPE D WITH GEOTEXTILE FABRIC	
			6			601	6	CY	ROCK CHANNEL PROTECTION, TYPE C WITH GEOTEXTILE FABRIC (4'W X 5'L X 18"D)	
2						659	2	EACH	SOIL ANALYSIS TEST	
18,246						659	18,246	SY	SEEDING AND MULCHING	
2,025						659	2,025	CY	TOPSOIL	
912						659	912	SY	REPAIR SEEDING AND MULCHING	
912						659	912	SY	INTER-SEEDING	
2.5						659	2.5	TON	COMMERCIAL FERTILIZER	
3.8						659	3.8	ACRE	LIME	
101						659	101	MGAL	WATER	
700						670	700	SY	SLOPE EROSION PROTECTION	
						832	LUMP	LS	STORM WATER POLLUTION PREVENTION PLAN	
						832	LUMP	LS	STORM WATER POLLUTION PREVENTION INSPECTIONS	
						832	25,000	EACH	EROSION CONTROL	

DESIGN AGENCY
DGL CONSULTING ENGINEERS, LLC
3455 BRIARFIELD BLVD. SUITE E
MAUMEE, OH 43537

NO.	REVISIONS	BY	DATE
1	QUANTITTY	GJS	4/3/24
-	-	-	-
-	-	-	-

DESIGNED GJS | CHECKED RJM | NO. | BY | DATE
DRAWN GJS | IN CHARGE AEH

GENERAL SUMMARY
SANDUSKY COUNTY
M.P. 83.3
PROJECT 43-24-03
DATE: 9/1/23

OHIO TURNPIKE AND INFRASTRUCTURE COMMISSION

71-21-04-GENERAL_SUMMARY.dwg: 4/03/24 - 10:10am

SHEET NUMBER 9	10	11	12	18	67	68	ITEM	GRAND TOTAL	UNIT	DESCRIPTION	SEE SHT. NO.
										TRAFFIC CONTROL	
						115	630	115	FT	GROUND MOUNTED SUPPORT, NO. 3 POST	
						63	630	63	SF	SIGN, FLAT SHEET	
						16	630	16	EACH	SIGN POST REFLECTOR	
						5	630	5	EACH	REMOVAL OF GROUND MOUNTED SIGN AND DISPOSAL	
						5	630	5	EACH	REMOVAL OF GROUND MOUNTED POST SUPPORT AND DISPOSAL	
						1	630	1	EACH	REMOVAL OF GROUND MOUNTED SIGN AND REERECTION	
					4.6		642	4.6	MILE	EDGE LINE, 6", TYPE 1	
					4.4		642	4.4	MILE	LANE LINE, 6", TYPE 1	
					292		SP 621	292	EACH	RAISED PAVEMENT MARKERS	
					1.7		SPECIAL	1.7	MILE	SONIC NAP ALERT PATTERN (SNAP)	
					24		SP 626	24	EACH	BARRIER REFLECTOR, TYPE 1 BIDIRECTIONAL	
					72		642	72	FT	CROSSWALK LINE, 24", TYPE 1	
					29		642	29	FT	STOP LINE, TYPE 1	
					0.2		642	0.2	MILE	CENTERLINE, TYPE 1, DASHED 4"	
					0.1		642	0.1	MILE	EDGE LINE, 4", TYPE 1, WHITE	
					0.3		642	0.3	MILE	LANE LINE, 4"	
					4		642	4	EACH	WORD ON PAVEMENT, 72"	
		3			185		642	185	FT	TRANSVERSE/DIAGONAL LINE, TYPE 1	
							3			**MAINTENANCE OF TRAFFIC**	
			8	2			614	10	EACH	WORK ZONE IMPACT ATTENUATOR	
	20						614	20	EACH	REPLACEMENT SIGN	
			2				614	2	EACH	WORK ZONE CROSSOVER LIGHTING SYSTEM	
	286	3	136				614	422	EACH	BARRIER REFLECTOR, TYPE B (ONE-WAY)	
	74		136				614	210	EACH	OBJECT MARKER, ONE WAY	
	106						614	106	EACH	OBJECT MARKER, TWO WAY	
		960					614	960	DAY	PORTABLE CHANGEABLE MESSAGE SIGN, AS PER PLAN	11
REMOVED				0.89			614	0.89	MILE	WORK ZONE LANE LINE, CLASS I, 6"	
REMOVED				1.46			614	1.46	MILE	WORK ZONE EDGE LINE, CLASS I, 6", (WHITE)	
				1.61			614	1.61	MILE	WORK ZONE EDGE LINE, CLASS I, 8", (WHITE)	
REMOVED				1.51			614	1.51	MILE	WORK ZONE EDGE LINE, CLASS I, 6", (YELLOW)	
				1.55			614	1.55	MILE	WORK ZONE EDGE LINE, CLASS I, 8", (YELLOW)	
				8,210			614	8,210	FT	WORK ZONE CHANNELIZING LINE, CLASS I, 8"	
				0.39			SP 614B	0.39	MILE	WORK ZONE LANE LINE, 6"	
				0.39			SP 614B	0.39	MILE	WORK ZONE EDGE LINE, 6" (WHITE)	
				0.39			SP 614B	0.39	MILE	WORK ZONE EDGE LINE, 6" (YELLOW)	
	2.88						SP 614C	2.88	MILE	REMOVAL OF PAVEMENT MARKINGS	
11,310							SP 614ZP	11,310	HRS	ZONE PERSON WITH ZONE VEHICLE	
			4,267				615	4,267	SY	PAVEMENT FOR MAINTAINING TRAFFIC, CLASS A, AS PER PLAN	12
	120						616	120	MGAL	WATER	
	20						SP 621	20	EACH	RAISED PAVEMENT MARKER- STIMSONITE MODEL 101 LPCR	
	20						SP 621	20	EACH	REPLACEMENT PRISMATIC RETRO-REFLECTOR	
	20						SP 621	20	EACH	REPLACEMENT RAISED PAVEMENT MARKER CASTING - STIMSONITE MODEL 101 LPCR	
				900			SP 622	900	FT	PORTABLE BARRIER, 32", (BRIDGE MOUNTED)	
	100	3		5,190			SP 622	5,290	FT	PORTABLE BARRIER, 32", (WITH GLARE SCREEN)	
			6,320	3,790			SP 622	10,110	FT	PORTABLE BARRIER, 32", (WITHOUT GLARE SCREEN)	
		25					SP 626	25	EACH	BARRIER REFLECTOR, TYPE A (WHITE)	
			3,464				SP 626A	3,464	EACH	CONSTRUCTION ZONE MARKER (EACH)	
	48						630	48	SF	SIGNING, MISC.: ADDITIONAL SIGNS WITH SUPPORTS, AS DIRECTED BY THE CHIEF ENGINEER	10
			2.88				642	2.88	MILE	PAVEMENT MARKING, MISC.: FINAL PAVEMENT MARKING PREPARATION	12
				7,600			SPECIAL	7,600	FT	"SNAP" - MILL AND FILL	12
										REMOVED	

DESIGN AGENCY
DGL CONSULTING ENGINEERS, LLC
3455 BRIARFIELD BLVD. SUITE E
MAUMEE, OH 43537

NO.	REVISIONS	BY	DATE
1	QUANTITY	SRC	3/26/24
2	QUANTITY	SRC	3/27/24
3	QUANTITY	SRC	4/1/24

CHECKED RJM — IN CHARGE AEH
DESIGNED GJS — DRAWN GJS

GENERAL SUMMARY
SANDUSKY COUNTY
M.P. 83.3
PROJECT 43-24-03
DATE: 9/1/23

OHIO TURNPIKE AND INFRASTRUCTURE COMMISSION

71-21-04-GENERAL_SUMMARY.dwg; 4/02/24 - 4:10pm

STATION RANGE			SIDE	DISTANCE	AVERAGE WIDTH (W)	SURFACE AREA (A)	CADD GENERATED AREA	202 PAVEMENT REMOVED, AS PER PLAN	204 SUBGRADE COMPACTION	209 LINEAR GRADING, AS PER PLAN	252 FULL DEPTH PAVEMENT SAWING	254 PAVEMENT PLANING, ASPHALT CONCRETE (T=2")	SP 302 ASPHALT CONCRETE BASE, PG64-22 (T=12")	SP 302 ASPHALT CONCRETE BASE, PG64-22 (SHOULDER) (T=8")	SP 304 AGGREGATE BASE (T=6")	SP 304 AGGREGATE BASE (T=9-1/4")	SP 304 AGGREGATE BASE (SHOULDER) (T=10")	SP 402 ASPHALT CONCRETE INTERMEDIATE COURSE OR RECYCLED ASPHALT CONCRETE INTERMEDIATE COURSE, PG 64-22 (T=1-3/4")	SP 402 ASPHALT CONCRETE INTERMEDIATE COURSE OR RECYCLED ASPHALT CONCRETE INTERMEDIATE COURSE, PG 76-22 (FR) (T=1-3/4")	SP403 ASPHALT CONCRETE LEVELING COURSE, USING CRUSHED STONE, PG76-22 (FR) (VARIABLE DEPTH)	SP 404 ASPHALT CONCRETE SURFACE COURSE, USING CRUSHED SLAG, PG 76-22 (FR) (T=1-1/2")	407 NON-TRACKING TACK COAT	407 NON-TRACKING TACK COAT (APP. @ 0.085 GAL/SY)	609 ASPHALT CONCRETE CURB, TYPE 1, PG64-22	SP 627 STONE SHOULDER PROTECTION (T=3")
				FT	FT	SY	SF	SY	SY	STA	FT	SY	CY	CY	CY	CY	CY	CY	CY	CY	CY	GAL	GAL	FT	CY
OHIO TURNPIKE																									
RESURFACING AND FULL DEPTH																									
65+50.00	TO	66+00.00	WB	50.00	60.75	337.50						338								9	15	20	29		
66+00.00	TO	67+00.00	WB	100.00	60.75	675.00		684	698	1.0	162		192	24	96		33	13	20		28	117		100	2.0
66+50.00	TO	67+00.00	EB	50.00	60.75	337.50						338								9	15	20	29		
67+00.00	TO	74+78.73	WB	778.73	60.75	5256.43	1	2179	5545	7.8	62		1529	189	764		254	103	156		222	915		779	15.6
67+00.00	TO	74+78.73	EB	778.73	60.75	5256.43		1461	5545	7.8			1529	189	764		254	103	156		222	915		779	15.6
APPROACH SLAB																									
74+78.73	TO	74+95.46	WB	16.73	62.50	116.18			119	0.2						30									0.3
74+78.73	TO	74+95.46	EB	16.73	62.50	116.18			119	0.2						30									0.3
76+58.14	TO	76+74.87	WB	16.73	62.50	116.18			119	0.2						30									0.3
76+58.14	TO	76+74.87	EB	16.73	62.50	116.18			119	0.2						30									0.3
FULL DEPTH																									
76+74.87	TO	76+94.87	WB	20.00	60.75	135.00		120	142	0.2			39	5	20		7	3	4		5	23		20	0.4
76+74.87	TO	76+94.87	EB	20.00	60.75	135.00		120	142	0.2			39	5	20		7	3	4		5	23		20	0.4
76+94.87	TO	77+50.00	WB	55.13	60.75	372.13		118	385	0.6	117		106	13	53		18	7	11		15	65		55	1.1
76+94.87	TO	77+50.00	EB	55.13	60.75	372.13		118	385	0.6	117		106	13	53		18	7	11		15	65		55	1.1
RESURFACING																									
77+50.00	TO	78+00.00	WB	50.00	60.75	337.50						338								9	15	20	29		
77+50.00	TO	78+00.00	EB	50.00	60.75	337.50						338								9	15	20	29		
							SUBTOTALS	4800	13,318	18.75	458.00	1350	3540	438.00	1,770.00	120.00	591.00	239.00	362.00	36.00	572.00	2203.00	116	1808	37.4
							TOTALS CARRIED TO GENERAL SUMMARY	4800	13318	19	458	1,350	3978		2,481			239	362	36	572	2319		1,808	38

1

NO.	REVISIONS	BY	DATE
1	QUANTITY	GJS	4/3/24
-	-	-	-
-	-	-	-

DESIGNED GJS | CHECKED RJM | DRAWN GJS | IN CHARGE AEH

DESIGN AGENCY
DGL CONSULTING ENGINEERS, LLC
3455 BRIARFIELD BLVD. SUITE E
MAUMEE, OH 43537

PAVEMENT SUBSUMMARY

SANDUSKY COUNTY

M.P. 83.3

PROJECT 43-24-03

DATE: 9/1/23

OHIO TURNPIKE AND INFRASTRUCTURE COMMISSION

OHIO TURNPIKE

71-21-04-SUBSUMMARIES.dwg; 4/03/24 - 9:56am

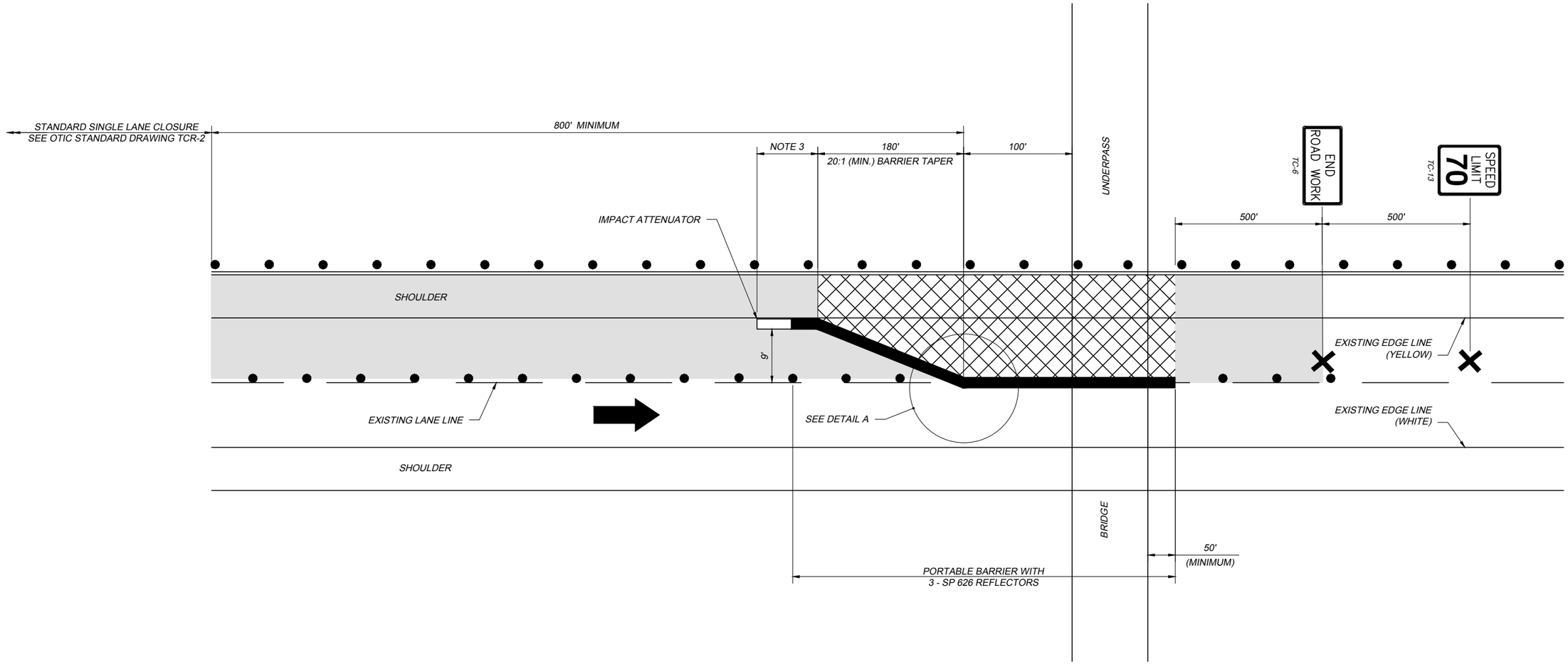

SINGLE LANE CLOSURE WITH PORTABLE BARRIER (TPB)

(LEFT LANE CLOSURE SHOWN, RIGHT LANE CLOSURE SIMILAR)
(TWO LANE SECTION SHOWN, THREE LANE CLOSURE SIMILAR)

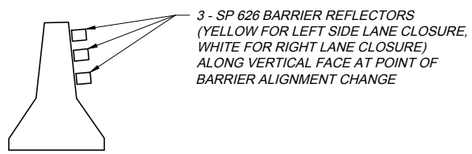

DETAIL A

NOTES:

1. IMPACT ATTENUATOR FROM CURRENT ODOT APPROVED LIST, ODOT TYPE 3 AND SHALL BE INSTALLED IN ACCORDANCE WITH MANUFACTURER'S WRITTEN INSTRUCTIONS.
2. THE IMPACT ATTENUATOR AND PORTABLE BARRIER NEEDED FOR THIS DETAIL SHALL BE INCLUDED IN THE LUMP SUM PRICE BID FOR SP 614 - MAINTAINING TRAFFIC AND SHALL INCLUDE ALL LABOR, MATERIALS, AND EQUIPMENT NECESSARY TO SET, RESET, AND REMOVE THE IMPACT ATTENUATOR AND PORTABLE BARRIER.
3. DISTANCE BASED ON MANUFACTURER'S RECOMMENDATION.
4. SP 626 BARRIER REFLECTORS @ 10' SPACING (YELLOW FOR LEFT LANE CLOSURE, WHITE FOR RIGHT LANE CLOSURE)
5. IMPACT ATTENUATORS INSTALLED AT LOCATIONS OTHER THAN UNDERPASS BRIDGE (SHOWN) SHALL BE INSTALLED PER ODOT STANDARD CONSTRUCTION DRAWING MT - 101.75.

DATE: JANUARY 7, 2021

STANDARD DRAWING

TEMPORARY TRAFFIC CONTROL SINGLE LANE CLOSURE WITH PORTABLE BARRIER

TCR-14

1 / 1

OHIO TURNPIKE AND INFRASTRUCTURE COMMISSION

TCR-14 2021.01.07.DWG; 1/19/21